DAICO *Industries*

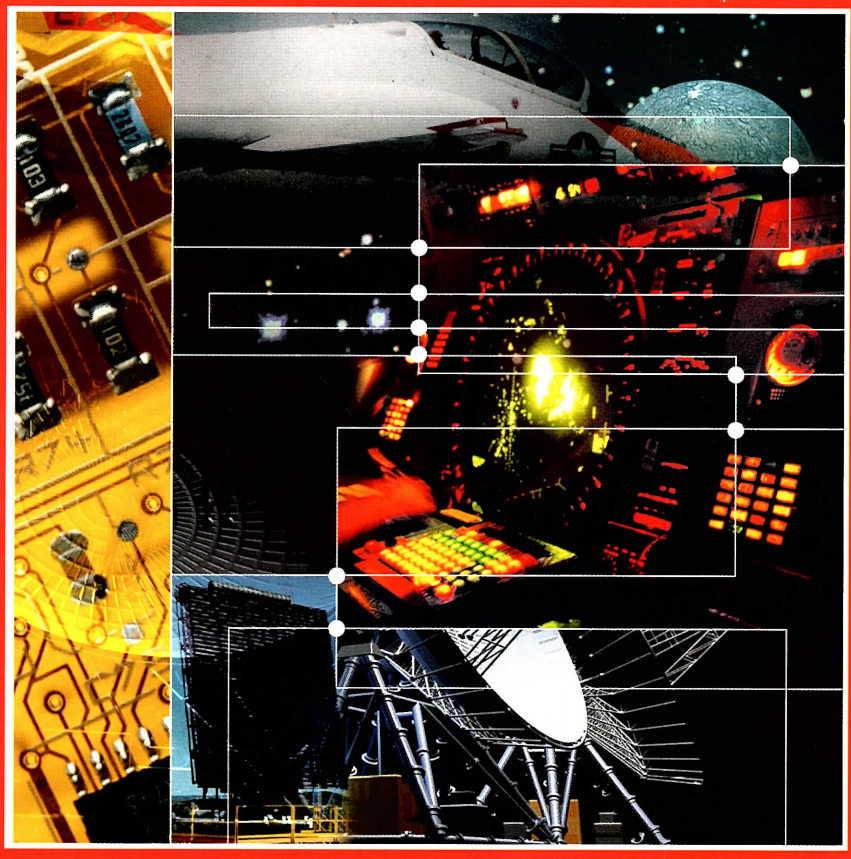

PRODUCT CATALOG

Issue 11

Amplifiers

Control Products

Multi-Function Assemblies

DAICO

DAICO Industries, Inc. is a privately held California corporation. Our 41,000 sq. ft. manufacturing facility is located just 12 miles south of the Los Angeles International Airport.

In our 40 year history we have provided advanced IF/RF and Microwave Control Products and Amplifiers for the Defense Electronics, Aerospace, Commercial Aircraft, and other high-end commercial industries. From advanced communications and radar to commercial space, our custom high-reliability products are integral to the complex operations of major Satellite, Radar, Navigation, Communications, Electronic Warfare, and Missile Systems Applications.

We offer a broad range of products operating from DC to 18 Ghz.DAICO is your Source for Custom Solutions in IF/RF and Microwave Frequencies for Amplifiers, Control Products and Multi-Function Assemblies. We design, build, and test products specifically to your requirements.

This catalog contains just a few of the thousands of products made for our many customers over the years. Choose from any of the devices shown herein, if you don't find what you need, provide us with a complete listing of your requirements. We will either modify one of our existing products or design a completely new one to meet your requirements. It's that simple.

Our experienced RF designers and engineers are described within the engineering community as goal oriented partners who follow through from design, prototyping, manufacturing, test, burn-in to final delivery. Guaranteeing the highest possible quality. We provide high-performance, high-reliability Control products, Amplifiers, Sub Assemblies and Contract Manufacturing to the Defense and Aerospace marketplace.

We are proud to serve you.

IF/RF/Microwave Products

DAICO *Industries*

TABLE OF CONTENTS

PART NUMBER INDEX 3

AMPLIFIERS 6

SPACE 31

MULTI-FUNCTION ASSEMBLIES 32

SWITCHES (GaAs MMIC, PIN Diode, Schottky Diode, Relay) 76

DIGITAL ATTENUATORS 178

VOLTAGE CONTROLLED ATTENUATORS 226

PHASE SHIFTERS & Bi-PHASE MODULATORS 244

BIT/THRESHOLD DETECTORS 268

PROGRAM MANAGEMENT 283

CONTRACT MANUFACTURING 284

QUALITY ASSURANCE 285

ORDERING INFORMATION 292

CUSTOM REQUIREMENT QUESTIONNAIRE 293

Part Number Index

SORTED BY LAST 4 SIGNIFICANT DIGITS

DS0028		SP5T MIC	152
DA0035		VCA MIC	230
DS0052		SP2T MIC	*see website*
DS0073		SP3T MIC	*see website*
DS0085		SP4T MIC	*see website*
DS0097		Transfer Switch MIC	*see website*
DA0098		VCA MIC	232
DS0137		SP7T MIC	*see website*
DA0243		VCA MIC	236
DA0285		7 Section Attenuator MIC	*see website*
100C0285		SP3T Connectorized Relay	*see website*
DA0295		7 Section Attenuator MIC	*see website*
DS0319		Transfer Switch MIC	175
DS0345		SP5T MIC	153
100C0347		Connectorized Transfer Switch	177
100C0350		SP2T Connectorized Relay	*see website*
DA0351-x		2 Section Attenuator MIC	187
DA0375		7 Section Attenuator MIC	*see website*
DA0425		VCA MIC	231
DS0432		SP2T MIC	104
100C0485		SP4T Connectorized Relay	150
DS0492		SP2T MIC	105
DS0506		SP6T MIC	160
DS0519		DPDT MIC	172
DS0545		SP4T MIC	138
DS0551		SPST MIC	85
DP0560		3 Section Phase Shifter MIC	72
DS0602	GaAs	SP2T MIC	99
100C0611		SP2T Connectorized Relay	*see website*
100C0612		SP3T Connectorized Relay	136
DS0612		SP2T MIC	101
100C0613		SP4T Connectorized Relay	*see website*
DS0613		SP2T MIC	107
100C0614		SP5T Connectorized Relay	158
100C0615		SP6T Connectorized Relay	164
DA0617		7 Section Attenuator MIC	*see website*
DA0620		5 Section Attenuator MIC	195
CDS0621		SPST Connectorized MIC	88
CDS0622		SP2T Connectorized MIC	118
CDS0623		SP3T Connectorized MIC	133
CDS0624		SP4T Connectorized MIC	145
DS0632	GaAs	SP2T MIC	112
DS0644		SP4T MIC	*see website*
DA0645		VCA MIC	228
CDS0651	GaAs	SPST Connectorized MIC	89
DA0659		5 Section Attenuator MIC	199
DA0660		5 Section Attenuator MIC	196
CDA0666		5 Section Attenuator Conn MIC	*see website*
CDS0667		SP2T Connectorized MIC	119
CDS0669		SP3T Connectorized MIC	134
CDS0670		SP4T Connectorized MIC	146
CDS0671		SPST	82
100D0688		Connectorized Antenna Selector	61
DS0702-R	GaAs	SP2T	*see website*
DS0702-T	GaAs	SP2T	*see website*
DS0705	GaAs	SP5T MIC	156
100D0712		7 Section Attenuator Connectorized	*see website*
DS0712	GaAs	SP2T MIC	111
DA0717		7 Section Attenuator MIC	212
DA0735		VCA MIC	235
DBP0738	GaAs	Bi-Phase Modulator MIC	247
DS0742	GaAs	SP2T	*see website*
DS0744		SP4T MIC	141
DA0757	GaAs	5 Section Attenuator MIC	201
DA0760		5 Section Attenuator MIC	202
DA0769		5 Section Attenuator MIC	203
DA0775		7 Section Attenuator MIC	213
DS0778		SP4T MIC	*see website*
DA0784-1	GaAs	4 Section Attenuator MIC	194
DA0786	GaAs	6 Section Attenuator MIC	*see website*
DA0795		7 Section Attenuator MIC	214
DS0812	GaAs	SP2T MIC	98
DS0813	GaAs	SP2T MIC	*see website*
DS0813-T	GaAs	SP2T MIC	95
CDPO815		4 Section Phase Shifter Conn MIC	57
DA0816-X	GaAs	1 Section Attenuator MIC	182
DS0820		SP10T MIC	170
CDP0827		4 Section Phase Shifter Conn MIC	255
DS0842	GaAs	SP2T MIC	*see website*
DA0844		6 Section Attenuator MIC	*see website*
DS0850	GaAs	SP2T MIC	*see website*
DS0850-T	GaAs	SPATIAL MCC	96
DA0857	GaAs	5 Section Attenuator MIC	*see website*
DS0860	GaAs	SP2T MIC	114
CDA0867	GaAs	7 Section Attenuator Conn MIC	215
DP0877		3 Section Phase Shifter MIC	*see website*
DA0879		1 Section Attenuator MIC	183
DS0880		SP2T MIC	108
DP0881	GaAs	1 Section Phase Shifter MIC	249
CDS0882	GaAs	SP2T Connectorized MIC	*see website*
DA0885	GaAs	5 Section Attenuator MIC	207
DA0886	GaAs	6 Section Attenuator MIC	*see website*
DA0887	GaAs	7 Section Attenuator MIC	209
DP0891	GaAs	5 Section Phase Shifter MIC	258
CDS0892		SP2T Connectorized HDMIC	49
100DO896		6 Section Phase Shifter Conn	263
DA0897	GaAs	7 Section Attenuator MIC	211
100DO898		8 Section Phase Shifter Conn	265
DA0900		6 Section Attenuator MIC	55
DX0907		2 Section Attenuator/Amp MIC	*see website*
100C0911		VCA Connectorized	239
100C0912		VCA Connectorized	240
CDS0912		SP2T Connectorized MIC	120
DS0918	GaAs	SP16T MIC	171
DS0919	GaAs	SP2T MIC	*see website*
DP0921		6 Section Phase Shifter MIC	261
DA0923-10	GaAs	1 Section Attenuator MIC	*see website*
CDP0926		4 Section Phase Shifter Conn MIC	58
DA0930		VCA MIC	229
DBP0938	GaAs	Bi-Phase Modulator MIC	246
DA0944-10	GaAs	1 Section Attenuator MIC	184
CDX0947		SPST Connectorized HDMIC	*see website*
DS0950		SPST MIC	83
DA0953	GaAs	5 Section Attenuator MIC	*see website*
DA0956		6 Section Attenuator MIC	*see website*
DA0960		Fixed Attenuator MIC	181
DS0962	GaAs	SP2T MIC	115
DS0966-1		SP2T MIC	106

Part Number Index

SORTED BY LAST 4 SIGNIFICANT DIGITS

DS0967		SP4T MIC	140
DLA0977	GaAs	Low Noise Amplifier MIC	8
CDS0979		SP2T Connectorized MIC	122
DA0984-1	GaAs	4 Section Attenuator MIC	*see website*
100D0988		Connectorized Antenna Selector	60
DA0996	GaAs	6 Section Attenuator MIC	*see website*
DS0997	GaAs	SP3T MIC	131
DA0998		VCA MIC	237
10OC1003		SP2T Connectorized Relay	126
10OC1032		SP2T Connectorized SS Switch	*see website*
10OC1041		SPST Connectorized SS Switch	91
10OC1094		SP7T Connectorized Relay	*see website*
10OC1159		SP8T Connectorized Relay	168
10OC1285		SP5T Connectorized SS Switch	*see website*
10OC1286		SP6T Connectorized SS Switch	*see website*
10OC1287		Connectorized Transfer SS Switch	*see website*
10OC1295		SP5T Connectorized SS Switch	*see website*
10OC1296		SP6T Connectorized SS Switch	163
10OC1297		Connectorized Transfer SS Switch	176
10OD1313		Connectorized Antenna Selector	62
10OC1492		SP2T Connectorized SS Switch	123
10OC1521		VCA Connectorized	241
10OC1575		VCA Connectorized	242
10OC1585		7 Section Attenuator Connectorized	*see website*
10OC1592		SP2T Connectorized SS Switch	124
10OC1595		7 Section Attenuator Connectorized	222
10OC1598		SP2T Connectorized SS Switch	125
10OC1739		Matrix Connectorized Switch	38
10OC1757		7 Section Attenuator Connectorized	223
10OD1788		Connectorized Antenna Selector	63
10OC1797		Connectorized Sub-Assy Modulator	54
10OC1818		VCA Connectorized	243
10OC1820		Matrix Connectorized Switch	37
10OD1827		T/R-Switch/LNA Assembly	*see website*
DDC01920		Coupler MIC	*see website*
DTD01904		Bit Detector	269
CSWX1923		SP2T & SP5T MIC Switch	46
CHDO1940		Switch-Attenuator-Amplifier MIC	51
DAT41944	GaAs	4 Section Attenuator MIC	191
DTD01960		Threshold Detector MIC	272
DSW21965	GaAs	SP2T MIC	97
DSWT1981	GaAs	Transfer Switch MIC	*see website*
DAT71987		7 Section Attenuator MIC	210
DHD01988		Coupler-Threshold Detector MIC	270
DAT41994	GaAs	Section Attenuator MIC	*see website*
DAT51995	GaAs	5 Section Attenuator MIC	198
DAT61996	GaAs	6 Section Attenuator MIC	207
DSW21998		SP2T	109
DTDO1999		Threshold Detector MIC	271
DPS52005		5 Section Phase Shifter MIC	259
DAD02006		Analog Detector MIC	273
DSW22023	GaAs	SP2T	100
DSW32025	GaAs	SP3T	129
DPS42028		4 Section Phase Shifter MIC	250
DPS42029		4 Section Phase Shifter MIC	251
CPS62036		6 Section Phase Shifter	262
DSW42044	GaAs	SP4T	139
CAT52045		5 Section Attenuator	200
CAT82048		8 Section Attenuator	225
DAT82050		8 Section Attenuator	*see website*
DSW32096	GaAs	SP3T	130
CPS42126		4 Section Phase Shifter	252
CPS42127		4 Section Phase Shifter	253
DSW52179		SP5T	154
DSWT2180		Transfer Switch MIC	174
DPS52181		5 Section Phase Shifter MIC	260
DAT42182		4 Section Attenuator MIC	190
DSW62188	GaAs	SP6T MIC	161
DSW72199	GaAs	SP7T MIC	165
DSW22201		SP2T	102
DSW22206		DP2T	173
CSW52216		SP5T	155
CSW22223		SP2T	103
CATV2225		VCA	233
CATV2226		VCA	234
DAT15015-X	GaAs	1 Section Attenuator MIC	185
DTD05026		Threshold Detector MIC	278
DSWX5034	GaAs	Matrix Switch MIC	39
DSW25038	GaAs	SP2T MIC	113
DTD05045		Threshold Detector MIC	282
DHD05071		Coupler Detector MIC	276
DAT15073		1 Section Attenuator	186
CTD05076		Threshold Detector	280
DSWM5077		SP11T	*see website*
DAD05079		Analog Detector MIC	279
DTD05080		Threshold Detector	281
DPS45081		4 Section Phase Shifter	254
DPS45085		4 Section Phase Shifter	*see website*
DTD05097		Threshold Detector	277
CSWT5103		Transfer Switch/Amplifier	50
DAMB5111		Amplifier MIC	*see website*
DSW25112		SP2T	94
DSW25151		SP2T MIC	110
DSW25251-P		SP2T	*see website*
CAT65280		6 Section Attenuator	208
CLM06149		Limiter Connectorized MIC	59
CSWX6152		Connectorized Switch Matrix	40
DSW46174		SP4T	147
DSW26176		SP2T Connectorized MIC	121
DSW36177		SP3T Connectorized MIC	135
DSW56178		SP5T Connectorized MIC	157
DHD06179	GaAs	Switch Amplifier MIC	48
DSW26182		SP2T Connectorized MIC	*see website*
DSW16186		SPST Connectorized MIC	92
DAML6188	GaAs	Low Noise Amplifier	9
DSW26189		SP2T Connectorized MIC	117
DSW46190		SP4T Connectorized MIC	144
DAT76191		7 Section Attenuator MIC	217
DSW46194	GaAs	SP4T MIC	148
DAT56195	GaAs	5 Section Attenuator Connectorized MIC	206
DAT86198	GaAs	8 Section Attenuator	224
DAT76199	GaAs	7 Section Attenuator	216
DSW36200		SP3T MIC	132
CAMG6201		RF Solid State Amplifier	23
DSW96213		SP9T MIC	169
DAT36217		3 Section Attenuator	189
DSW46218		SP4T	151
DAT76227		7 Section Attenuator	219

Part Number Index

SORTED BY LAST 4 SIGNIFICANT DIGITS

DAT76228		7 Section Attenuator	220
DAML6231		X-Band LNA	24
CAT76235		7 Section Attenuator	218
CSW26252	GaAs	SP2T	*see website*
CAMD6254		Driver Amplifier	22
DAML6266		Low Noise Amplifier	25
DAML6273		Variable Gain Low Noise Amplifier	26
DAML6274		Variable Gain Low Noise Amplifier	27
DAML6275		Variable Gain Low Noise Amplifier	28
DAML6278		Broadband Low Noise Amplifier	12
DAML6280		Variable Gain Low Noise Amplifier	20
DSW16282		SPST	90
DAML6284		Wideband Low Noise Amplifier	13
DAT76287		7 Section Attenuator	221
DAMM6289		Wideband Low Noise Amplifier	10
DAML6290		Wideband Low Noise Amplifier	11
DSWM6309		Matrix Connectorized Switch	45
DPS86315		8 Section Phase Shifter	264
CSW26323		Diode SP2T	128
CSW36333	GaAs	SP3T	137
DAMB6412-X		Broadband Amplifier	*see website*
DAMB6413-X		Broadband Amplifier	*see website*
DAMB6414-X		Broadband Amplifier	*see website*
DAMB6415-X		Broadband Amplifier	*see website*
DAMB6416-X		Broadband Amplifier	*see website*
DAMB6422-X		Broadband Amplifier	*see website*
DAMB6423-X		Broadband Amplifier	*see website*
DAMB6424-X		Broadband Amplifier	*see website*
DAMB6425-X		Broadband Amplifier	*see website*
DAMB6426-X		Broadband Amplifier	*see website*
DAMB6427-X		Broadband Amplifier	*see website*
DAMB6432-X		Broadband Amplifier	*see website*
DAMB6433-X		Broadband Amplifier	*see website*
DAMB6434-X		Broadband Amplifier	*see website*
DAMB6435-X		Broadband Amplifier	*see website*
DAMB6442-X		Broadband Amplifier	*see website*
DAMB6443-X		Broadband Amplifier	*see website*
DAMB6444-X		Broadband Amplifier	*see website*
DAMB6445-X		Broadband Amplifier	*see website*
DAMB6452-X		Broadband Amplifier	*see website*
DAMB6453-X		Broadband Amplifier	*see website*
DAMB6454-X		Broadband Amplifier	*see website*
DAMB6455-X		Broadband Amplifier	*see website*
DAMB6462-X		Broadband Amplifier	*see website*
DAMB6463-X		Broadband Amplifier	*see website*
DAMB6464-X		Broadband Amplifier	*see website*
DAMB6465-X		Broadband Amplifier	*see website*
DSW28000	GaAs	SP2T MIC	116
DPS38017		3 Section Phase Shifter MIC	*see website*
DAT58019	GaAs	5 Section Attenuator MIC	204
DSW48024	GaAs	SP4T MIC	142
DSW38030	GaAs	SP3T MIC	*see website*
DAT38031	GaAs	3 Section Attenuator MIC	188
DAT58032	GaAs	5 Section Attenuator MIC	205
DSW18033	GaAs	SPST MIC	86
DSW68034		SP6T MIC	162
DTD08035		Threshold Detector MIC	274
DPM08036	GaAs	Pulse Modulator MIC	87
CSW88050		SP8T	*see website*
CSW48051		SP4T	143
DTD08052		Threshold Detector MIC	275
DHD08059	GaAs	L-Band/UHF Hybrid	52
DAT48060		4 Section Attenuator	193
DAT48062		4 Section Attenuator	192
DHD08063		IF/AGC Hybrid	53
CSW88064		SP8T	*see website*
CSW18066		SPST	84
CATV8068		PIN Diode VCA	238
DDC09015		Coupler MIC	*see website*
CSWX9023		Matrix Connectorized Switch	36
DSW29029		SP2T Connectorized SS Switch	*see website*
DPS89032		8 Section Phase Shifter	266
CSA09034		SP4T Switch Assembly	42
CSA09035		Attenuator Assembly	56
DSWM9040		SP40T Connectorized Switch	43
DSW89048		SP8T Connectorized SS Switch	167
DAT69051	GaAs	6 Section Attenuator Connectorized	*see website*
DPMB9058	GaAs	Bi-Phase Modulator Connectorized	248
DAT49064		4 Section Attenuator Connectorized	*see website*
DSW49068		SP4T Connectorized Switch	149
DSWA9072		Switch Attenuator Connectorized	34
DSWM9073		Switch Assembly, RF 8 Channel	44
DSWX9078		Connectorized Antenna Selector	64
DPS89082		8 Section Phase Shifter	267
CPS49092		4 Section Phase Shifter	256
CPS49093		4 Section Phase Shifter	257
CSWM9096		SP5T	159
100C9099		SPST	*see website*
CPD09102		Combiner	66
CPD09103		Switch Input	67
CHD09104		Amplifier/Attenuator/Divider	68
CHD09105		Switch/Attenuator/Phase Shifter	69
CHD09106		Switch/Attenuator/Phase Shifter	70
CHD09107		Combiner	71
CSA9109-1		Antenna Switch	35
CSF49110		Switchable Band Pass Filter	75
CAMH9115		S-Band High Power Amplifier	21
CAMH9120		UHF High Power Amplifier	14
CAM09121		UHF High Power Amplifier (Driver)	15
CHDO9122		Output Signal Distribution Unit	*see website*
CSWM9125		Switch Matrix	41
CAMH9126		L-Band Power Amplifier	29
CAMG9127		Power Amplifier	30
DSW79177		SP7T	166
CAML9210		L-Band Low Noise Amplifier	16
CAMH9223		L-Band Pre-Amplifier	17
CAMD9224		L-Band High Power Amplifier	18
DAMD9227		25W Power Output Amplifier	19
CSA09247		Combination T/R-Switch/LNA	65
100D9288		Switch Selector UHF Antenna	73
CSW29289		SP2T	127
CSWX9290		High Power Antenna Selector	74
CHDO9297		4 Channel Up-Converter	47

Amplifiers

- Low Noise
- Driver
- High Power
- Narrow and Broad Bandwidth
- 27 MHz - 20 GHz

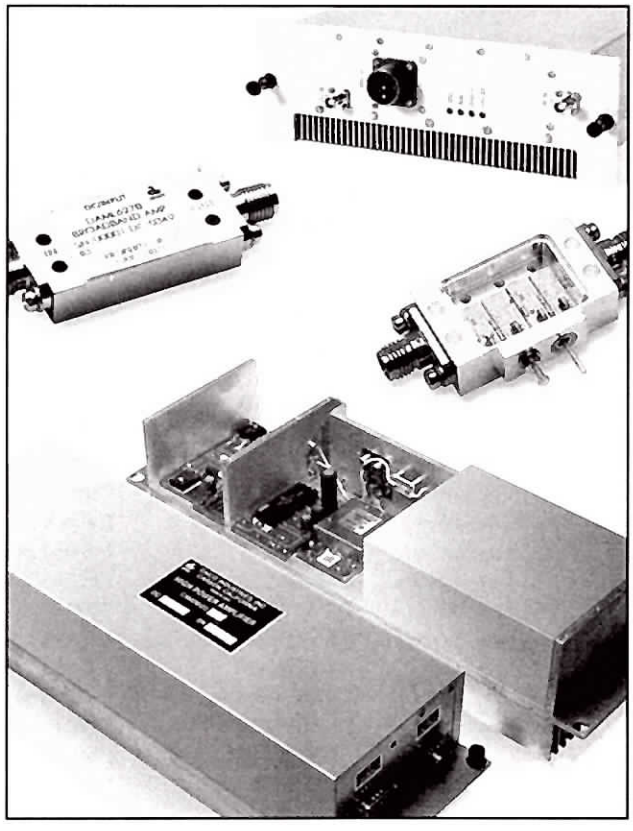

For additional products and information, please visit us at www.daico.com

Amplifiers Specification Table

	Freq GHz	Part Number	Gain dB Typ	VSWR Typ	Noise/ Figure Typ	Voltage	Reverse Isol.	Page
	0.020-0.100	DAML6266	30	1.8	1.5	5	-	25
	0.027-.0330	CAMD6254	41	1.5	3.0	-25	-	22
	0.060-0.700	DAML6273	29	1.3	2.0	5	-	26
	0.080-0.710	DAML6280	30	1.3	1.5	5	-	20
	0.100-2.100	DAML6284	27	1.4	1.3	5	-	13
	0.430-0.470	CAM09120	21	1.3	-	40	-	14
	0.430-0.470	CAM09121	55	1.3	-	40	-	15
	0.500-18	DAMB6462-X	10	2.0	5.0	15	-	*see website*
	0.500-18	DAMB6463-X	19	2.0	3.0	15	-	*see website*
	0.500-18	DAMB6464-X	27	2.0	2.8	15	-	*see website*
	0.500-18	DAMB6465-X	35	2.0	2.8	15	-	*see website*
	0.700-2.1	DAML6274	30	1.51	1.35	5	-	27
	0.900-1.100	DAMM6289	16	1.3	0.8	5	-	10
GaAs	1.000-1.100	DLA0977	24	1.3	1.4	12	46	8
	1.000-8.000	DAMB5111	8	1.5	5	12	23	*see website*
	1.200-1.400	CAML9210	28	1.2	1.0	4	-	16
GaAs	1.200-1.400	DAML6188	28.5	1.3	1.15	4	-	9
	1.215-1.400	CAMH9126	52	1.41	-	-	-	29
	1.215-1.400	CAMH9223	39.5	1.4	-	28	-	17
	1.215-1.400	CAMD9224	12.5	1.4	-	44	-	18
	1.550-1.650	DAML6290	27	1.2	0.8	5	-	11
	1.750-1.808	CAMG9127	28	1.31	-	-	-	30
	1.9-2	DAML6275	30	1.51	1.35	5	-	28
	2-6	DAMB6442-X	15	2.0	1.5	15	-	*see website*
	2-6	DAMB6443-X	29	2.0	1.5	15	-	*see website*
	2-6	DAMB6444-X	43	2.0	1.5	15	-	*see website*
	2-6	DAMB6445-X	57	2.0	1.5	15	-	*see website*
	2-18	DAMB6452-X	10	2.0	4.0	15	-	*see website*
	2-18	DAMB6453-X	19	2.0	3.0	15	-	*see website*
	2-18	DAMB6454-X	27	2.0	4.0	15	-	*see website*
	2-18	DAMB6455-X	35	2.0	2.8	15	-	*see website*
	2.700-2.900	CAMH9115	17	1.3	-	37	-	21
	2.700-2.900	DAMD9227	40	1.3	-	40	-	19
	4-8	DAMB6432-X	14	2.0	1.8	15	-	*see website*
	4-8	DAMB6433-X	27	2.0	1.5	15	-	*see website*
	4-8	DAMB6434-X	40	2.0	1.5	15	-	*see website*
	4-8	DAMB6435-X	53	2.0	1.5	15	-	*see website*
	5.750-10.900	CAMG6201	-	-	-	-	-	23
	6-12	DAMB6412-X	12	2.0	1.8	15	-	*see website*
	6-12	DAMB6413-X	22	2.0	1.8	15	-	*see website*
	6-12	DAMB6414-X	35	2.0	1.8	15	-	*see website*
	6-12	DAMB6415-X	46	2.0	1.8	15	-	*see website*
	6-12	DAMB6416-X	48	2.0	2.0	15	-	*see website*
	6-18	DAMB6422-X	9	2.0	2.0	15	-	*see website*
	6-18	DAMB6423-X	19	2.0	2.0	15	-	*see website*
	6-18	DAMB6424-X	28	2.0	2.0	15	-	*see website*
	6-18	DAMB6425-X	37	2.0	2.0	15	-	*see website*
	6-18	DAMB6426-X	9	2.0	5.0	15	-	*see website*
	6-18	DAMB6427-X	35	2.0	4.0	15	-	*see website*
	8-12	DAML6278	19	1.5	1.9	15	-	12
	8.500-11	DAML6231	32	1.5	5	15	-	24

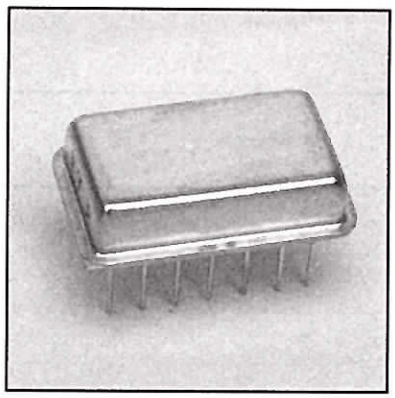

MODEL NUMBER DLA0977

Low Noise Amplifier

FEATURES

- 1000-1100 MHz
- 1.65 dB Noise Figure
- 24 dB Gain
- 45 dB Reverse Isolation
- 0.3° Phase Linearity

LNA

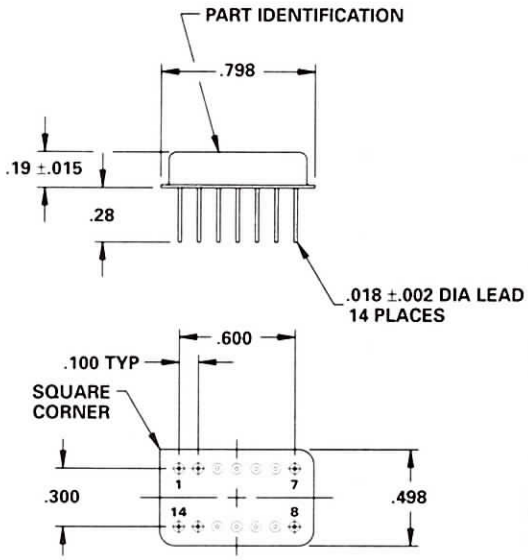

.xx = .02
.xxx = .010

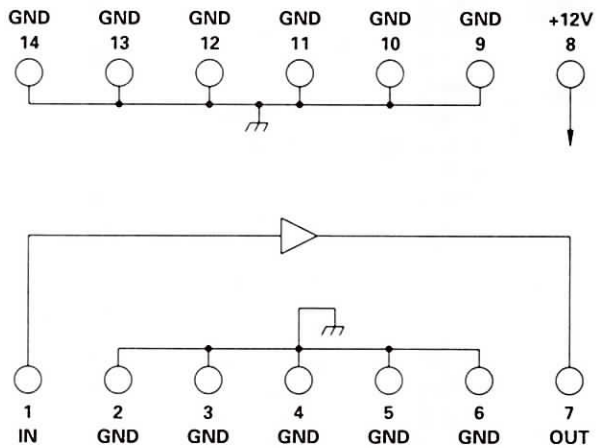

TYPICAL PERFORMANCE
at 25°C

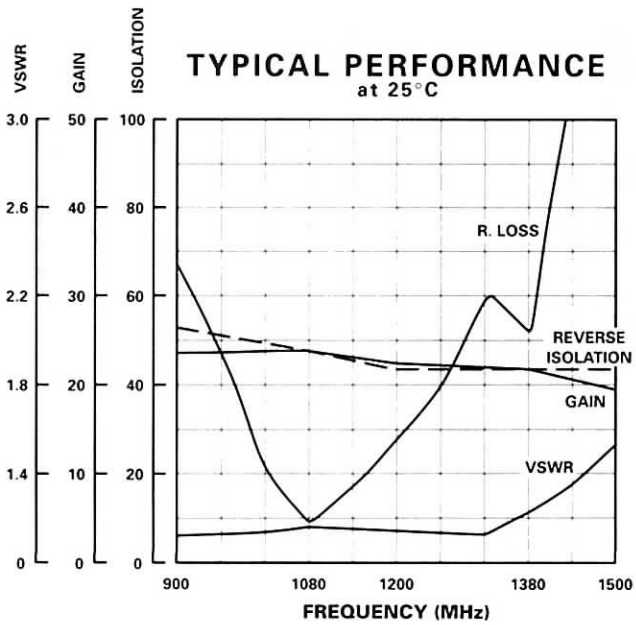

GUARANTEED PERFORMANCE

Parameter		Min	Typ	Max	Units	Conditions
Operating Frequency		1000		1100	MHz	
DC Current			32	40	mA	At +12 VDC Supply
Gain		22.5	24	25.5	dB	
Noise Figure			1.65	2.5		-55 To +85°C
			1.80	2.7		+85 To +100°C
Reverse Isolation		30	45		dB	
Phase Linearity			0.3	±2.0	DEG	Any 50 MHz Band
VSWR:	*Input*		1.53/1	2/1		
	Output		1.17/1	2/1		
Impedance			50		OHMS	
Intercept Point	*2nd*		+33		dBm	
	3rd	+15	+20		dBm	
RF Power	*Operate*	+5	+9.7		dBm	1.0 dB Compression
	No Damage			+20	dBm	+27 dBm Pulsed
Operating Temperature		-55	+25	+100	°C	TA

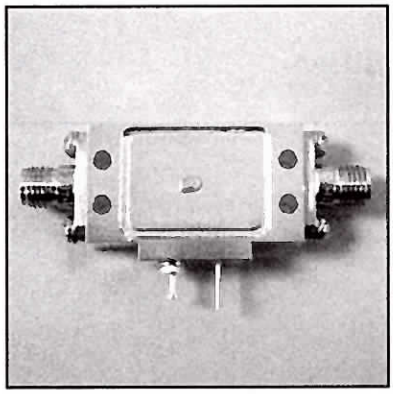

MODEL NUMBER DAML6188

GaAs FET Low Noise Amplifier

FEATURES

- 1.2-1.4 GHz
- 1.15 dB Noise Figure
- 28.5 dB Gain
- +27 dBm 3rd Order Intercept Point
- Replaceable SMA Connectors

LNA

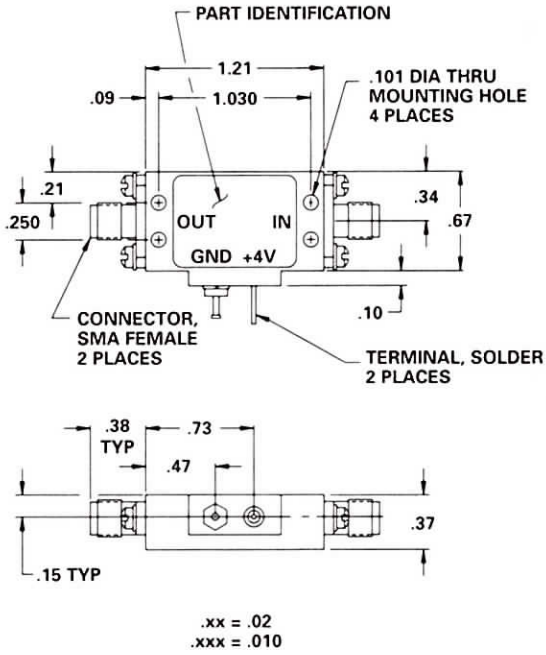

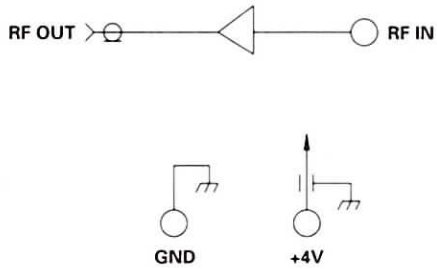

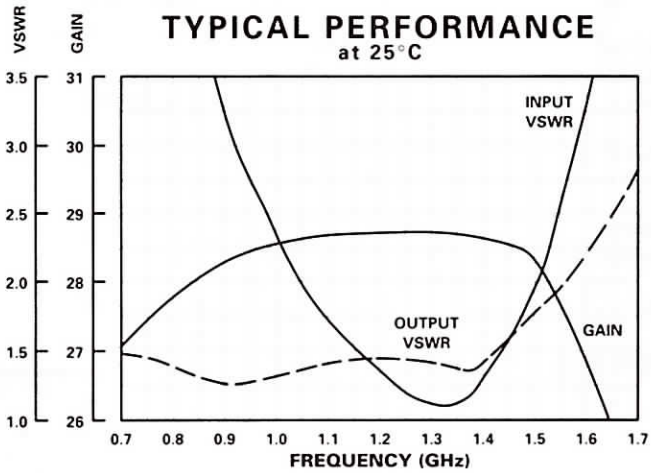

GUARANTEED PERFORMANCE

Parameter		Min	Typ	Max	Units	Conditions
Operating Frequency		1.215		1.4	GHz	
DC Power			130	200	mA	At +4 VDC
Gain		27.5	28.5	29.0	dB	
Out of Band Gain			0.4	1.0	dB	Over the Max. In Band Gain
Gain Flatness			±0.2	±0.3	dB	
Noise Figure			1.15	1.2	dB	At +25°C
VSWR	*Input*		1.3/1	1.4/1		
	Output		1.3/1	1.5/1		
1 dB GCP		+12.0			dBm	At +25°C
Intercept Point 3rd		+27.0	+27.5		dBm	At +25°C
Operating Temperature		-55	+25	+80	°C	TA

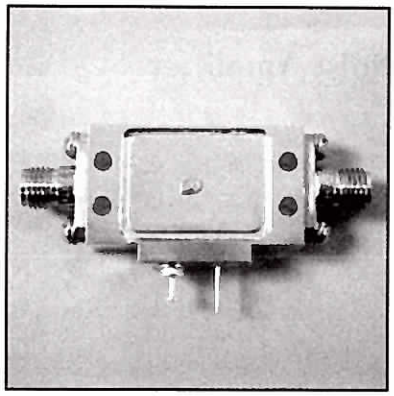

MODEL NUMBER DAMM6289

Low Noise Amplifier

FEATURES

- 0.9-1.1 GHz
- 1.1 dB Noise Figure
- SMA Package
- 16 dB Gain

LNA

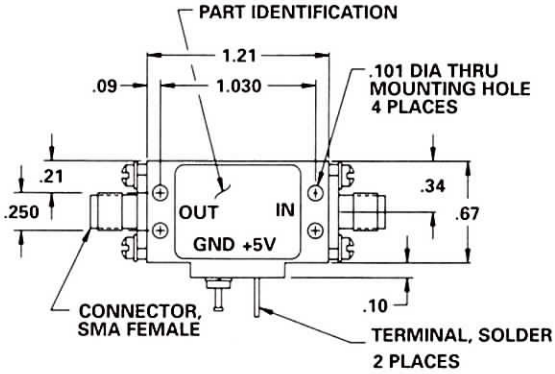

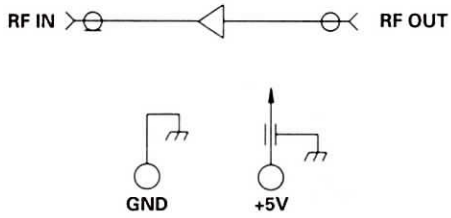

TYPICAL PERFORMANCE

at 25°C

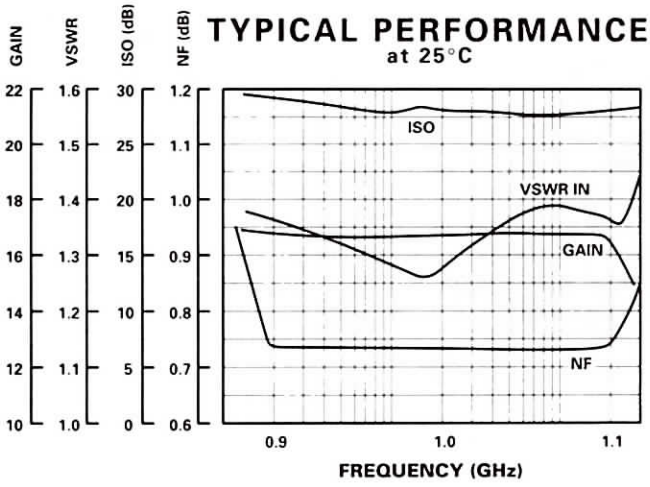

GUARANTEED PERFORMANCE

Parameter		Min	Typ	Max	Units	Conditions
Operating Frequency		0.9		1.1	GHz	
DC Current			70	90	mA	At +5 VDC Supply
Gain		16	16.2		dB	
Isolation (S12)		22	25		dB	
Noise Figure			0.8	1	dB	
VSWR			1.35/1	1.5/1		
Impedance			50		OHMS	
Intercept Points	*2nd*	45			dBm	
	3rd	+30			dBm	
RF Power	*Output*	+15			dBm	1 dB Compression
	Input	+15			dBm	No Damage
Operating Temperature		-50	+25	+85	°C	

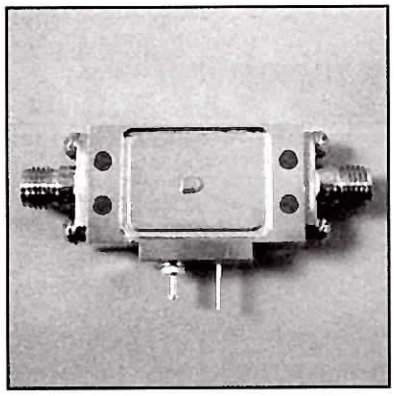

MODEL NUMBER DAML6290

Low Noise Amplifier

FEATURES

- 1.55-1.65 GHz
- SMA Connector
- 1.0 dB Noise Figure
- 26 dB Gain

LNA

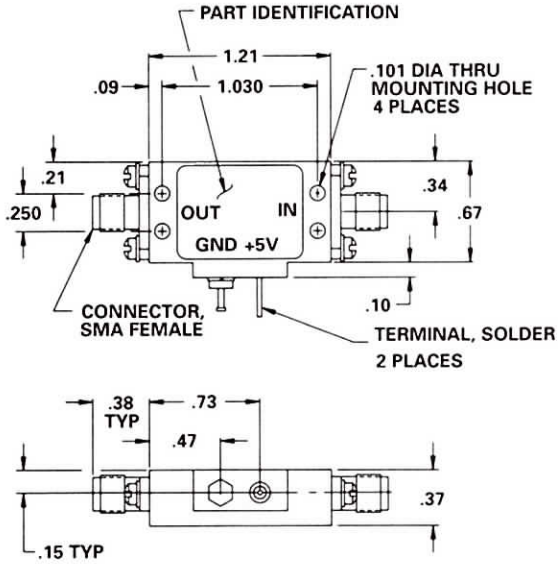

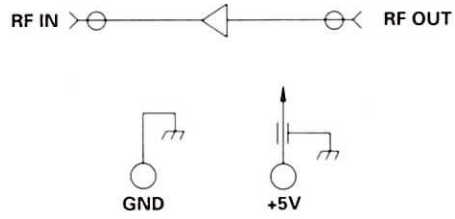

TYPICAL PERFORMANCE
at 25°C

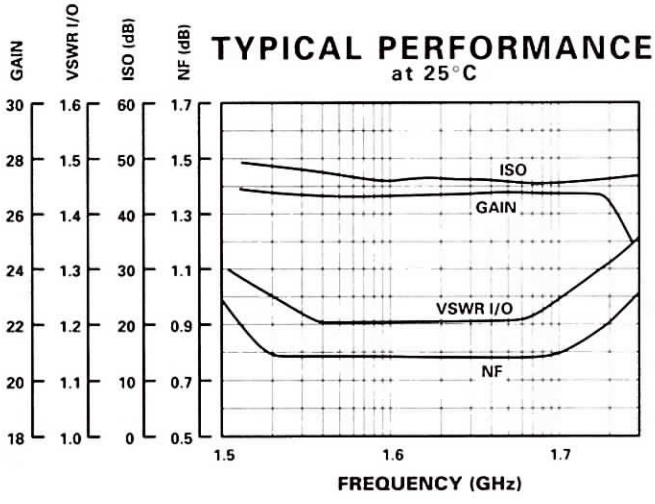

GUARANTEED PERFORMANCE

Parameter		Min	Typ	Max	Units	Conditions
Operating Frequency		1.55		1.65	GHz	
DC Current		100	120	210	mA	At +5 VDC Supply
Small Signal Gain		26	27		dB	
Isolation (S12)		40	45		dB	
Noise Figure			0.8	1.0	dB	
VSWR		1.25/1	1.2/1			
Impedance			50		OHMS	
Intercept Points	*2nd*	40			dBm	
	3rd	+27			dBm	
RF Power	*Output*	+10	+15		dBm	1 dB Compression
	Input	+10			dBm	No Damage
Operating Temperature		-50		+85	°C	TA

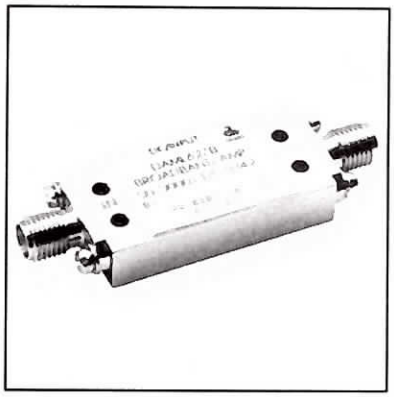

MODEL NUMBER DAML6278

Broadband Low Noise Amplifier

FEATURES

- 6-12 GHz
- 2.0 dB Noise Figure Max
- 18.5 dB Gain Minimum
- ±1.5 dB Gain Flatness
- Removable SMA Connectors

LNA

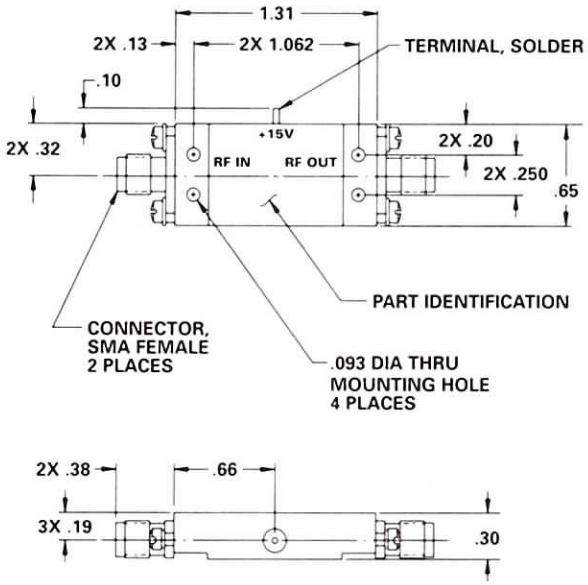

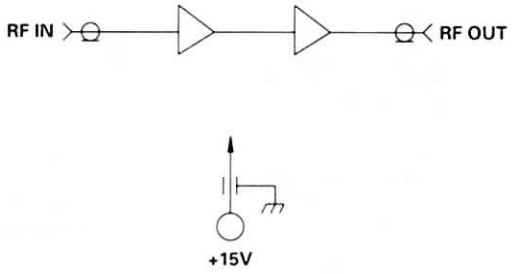

TYPICAL PERFORMANCE

at 25°C

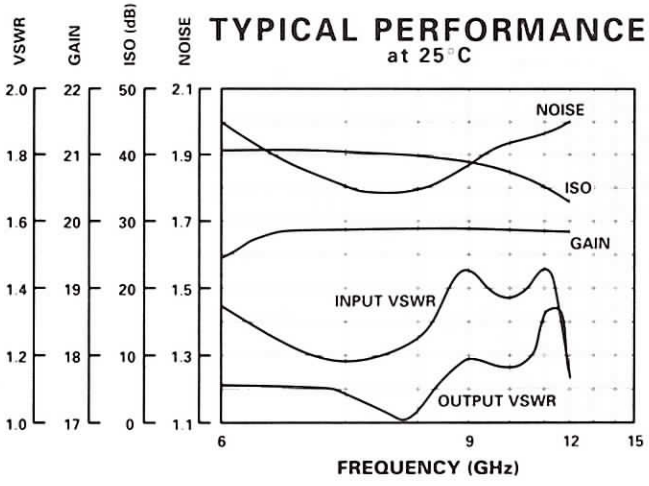

GUARANTEED PERFORMANCE

Parameter		Min	Typ	Max	Units	Conditions
Operating Frequency		6		12	GHz	
DC Current			100		mA	At +15 VDC Supply
Gain		18.5	19.5		dB	
Isolation (S12)		30	33		dB	
Noise Figure			1.9	2.1	dB	
VSWR In /Out			1.5/1	1.8/1		
Impedance			50		Ohms	
Intercept Points	*2nd*		31		dBm	
	3rd		21		dBm	
RF Power	*Output*	+11	+13		dBm	1dB Compression
	Input	+20			dBm	
Operating Temperature		-40	+25	+85	°C	TA

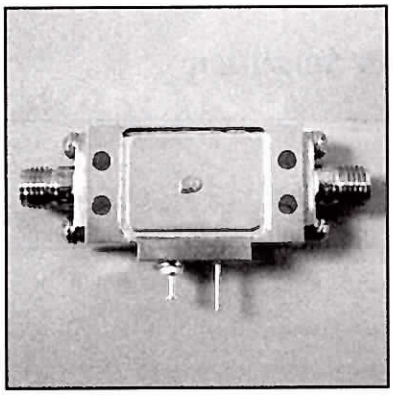

MODEL NUMBER DAML6284

Wideband Low Noise Amplifier

FEATURES

- 0.1-2.1 GHz
- 1.3 dB NF Typ.
- Gain +27 dB Typ.
- Single +5 VDC Supply
- Input Limiter Incl.

LNA

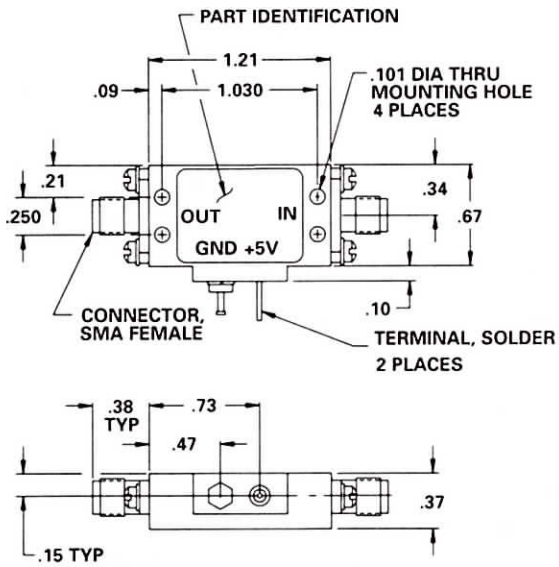

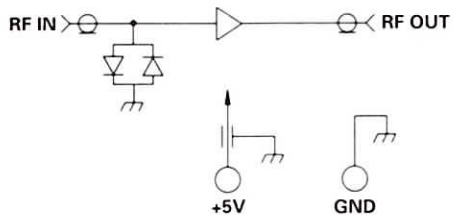

GUARANTEED PERFORMANCE

Parameter		Min	Typ	Max	Units	Conditions
Operating Frequency		0.1		2.1	GHz	
DC Current		100	120	170	mA	At +5 VDC Supply
Gain		25	26.5	29	dB	
Isolation (S12)		42	45		dB	
Noise Figure			1.3	1.65	dB	
Phase Tracking		-10	+/-3	+10	Degree	Unit to Unit (Sets of 2)
Amplitude Tracking		-1	+/-0.3	+1	dB	Unit to Unit (Sets of 2)
VSWR			1.35/1	1.4/1		
Impedance			50		OHMS	
Intercept Points	*2nd*	+40	+45		dBm	
	3rd	+27	+30		dBm	
RF Power	*Output*	9	10		dBm	1 dB Compression
	Input	0.75			Watts	No Damage (limiter)
Operating Temperature		-55	+25	+85	°C	TA

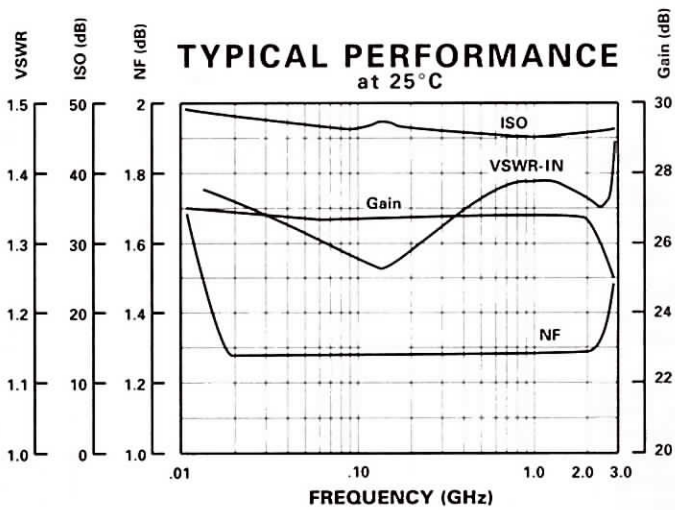

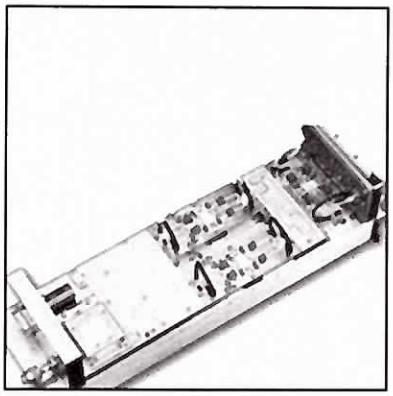

MODEL NUMBER CAMH9120

UHF High Power Amplifier

FEATURES

- 430-470 MHz
- Power Out +64 dBM
- Gain 21 dB
- 57% Efficiency
- 15% Duty Cycle

AMP

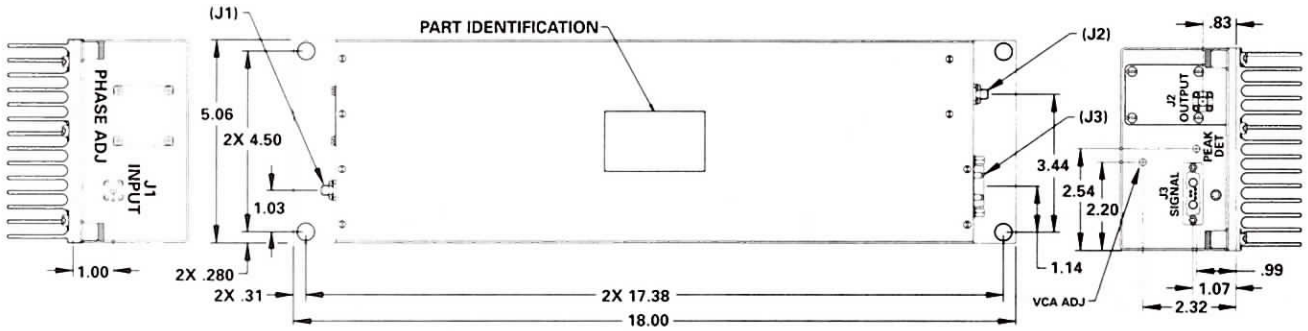

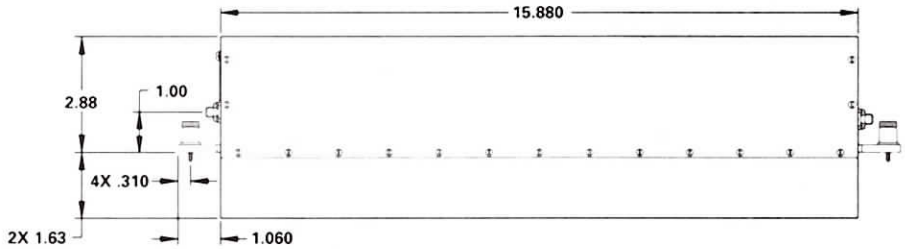

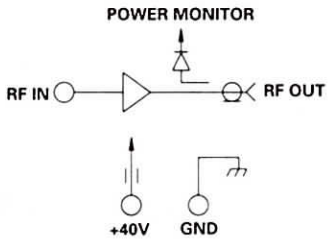

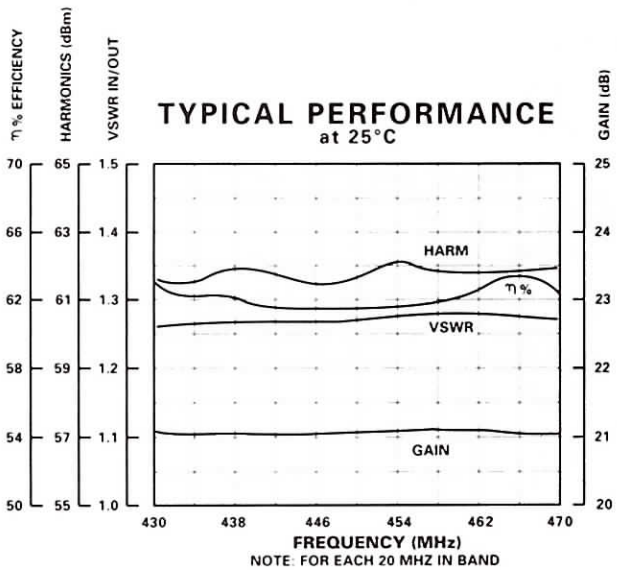

GUARANTEED PERFORMANCE

Parameter		Min	Typ	Max	Units	Conditions
Operating Frequency		430		470	MHz	Select 20 MHz in Band
RF Power	*Operate*	+63	+64		dBm	
Gain		20	21	22	dB	Gain Can Be Adjusted
VSWR In/Out			1.3	1.4		
VSWR Withstand				∞:1		No Damage All Phases
Harmonics	II	60			dBc	
	III	60			dBc	
Amplitude Tracking			±0.15	±0.25	DEG	Between Units
Phase Tracking			±1	±1.5	DEG	Between Units
Impedance			50		OHMS	
Duty Cycle				15	%	
Pulse Droop				0.05	dB	
Transition (Rise/Fall) Time				120	nSec	
DC Current				16.1	Amper	At +40 VDC Supply
Operating Temperature		-30	+25	+65	°C	TA

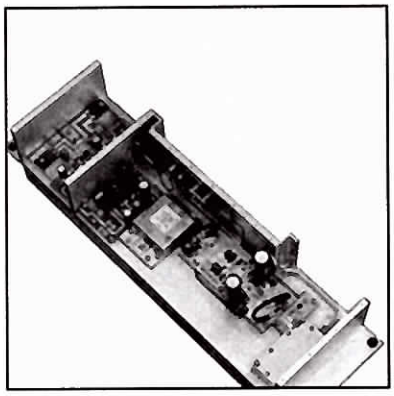

MODEL NUMBER CAM09121

UHF High Power Amplifier (Driver)

FEATURES

- 430-470 MHz
- Power Out +57.8 dBm
- Gain 55 dB
- Efficiently 62% at 40V
- Duty Cycle 15%

AMP

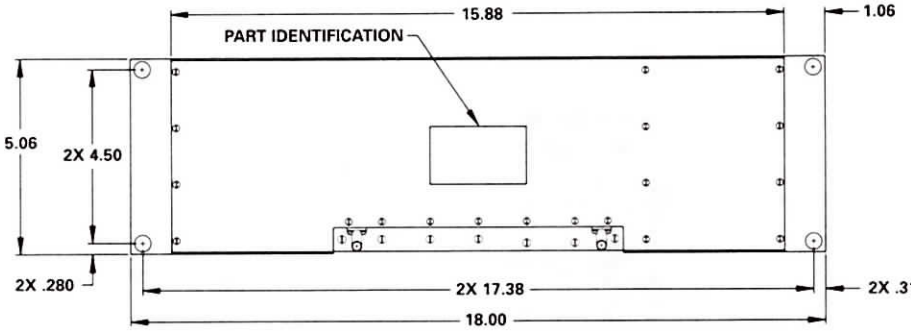

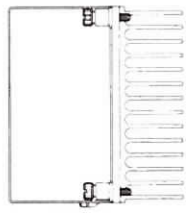

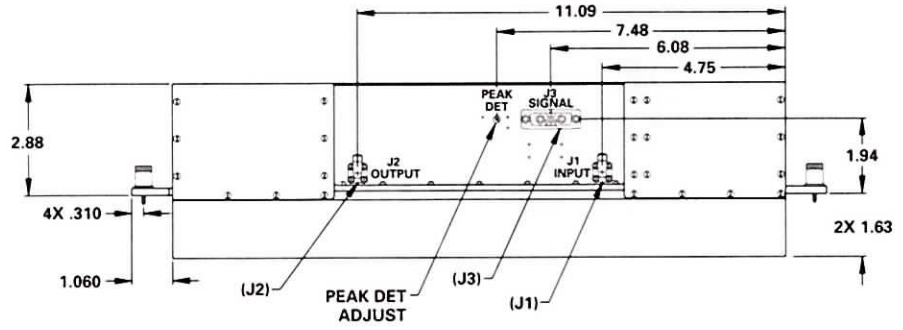

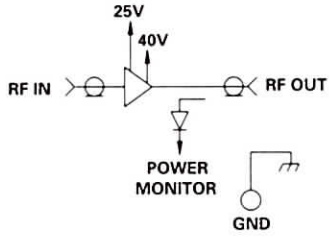

TYPICAL PERFORMANCE at 25°C

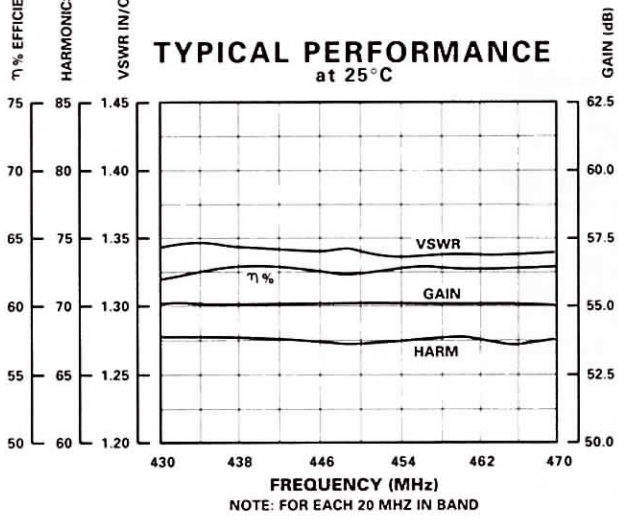

NOTE: FOR EACH 20 MHZ IN BAND

GUARANTEED PERFORMANCE

Parameter	Min	Typ	Max	Units	Conditions
Operating Frequency	430		470	MHz	Select 20 MHz in Band
RF Power *Output* *at 1 dB Compression*	+57.6	+57.8		dBm	
Gain	54.5	55		dB	Gain can be Adjusted to 60 dB Min.
VSWR In/Out		1.3	1.4		
Harmonics *II*	65			dBc	
III	65			dBc	
Amplitude Tracking		±0.2	±0.3	dB	Between Units
Phase Tracking		±1.5	±2	DEG	Between Units
Impedance		50		OHMS	
Duty Cycle			15	%	
Pulse Droop			0.05	dB	
Transition (Rise/Fall) Time		80		nSec	
DC Current			4	Amp	At +40 VDC Supply
			2.7	Amp	At +25 VDC Supply
Operating Temperature	-20	+25	+65	°C	TA

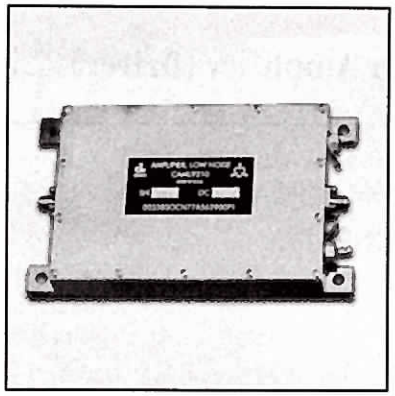

MODEL NUMBER CAML9210

L-Band Low Noise Amplifier

FEATURES

- 1.2-1.4 GHz
- Gain 28 dB
- 1 dB Noise Figure
- Phase Flatness ±2 deg

LNA

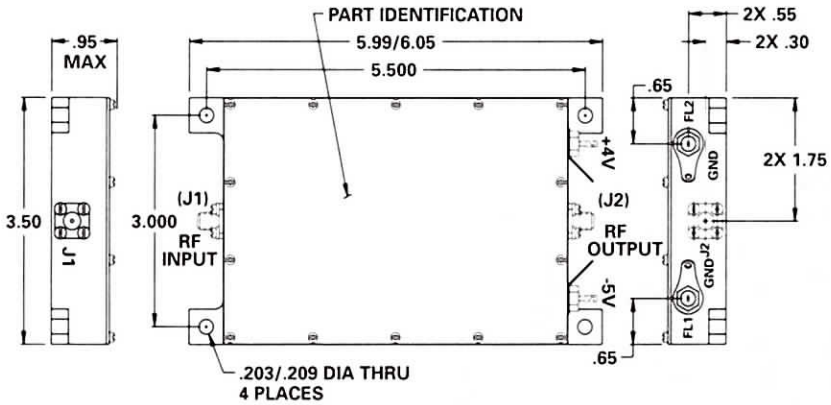

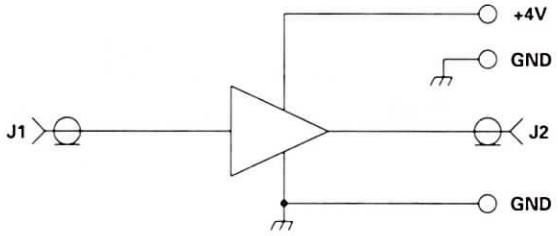

TYPICAL PERFORMANCE
at 25°C

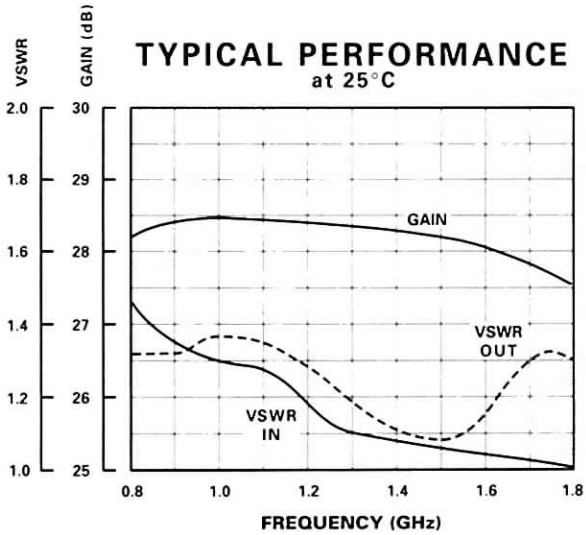

GUARANTEED PERFORMANCE

Parameter		Min	Typ	Max	Units	Conditions
Operating Frequency		1.2		1.4	GHz	
DC Current			130	200	mA	At +4.05 VDC Supply
Gain			28		dB	
Noise Figure			1.0	1.5	dB	
VSWR	*Input*		1.25/1	1.4/1		
	Output			1.5/1		
Impedance			50		OHMS	
RF Power	*Output*				dBm	
Time Delay				3.7	nSec	
Operating Temperature		-20	+25	+80	°C	TA

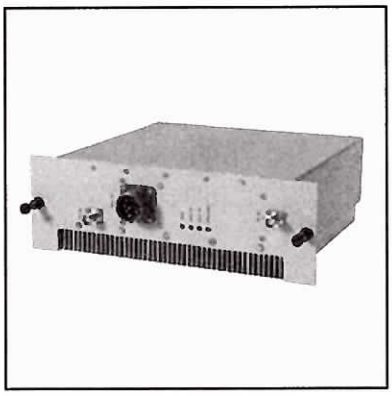

MODEL NUMBER CAMH9223

L-Band Pre-Amplifier

FEATURES

- 1215-1400 MHz
- 40 dB Gain
- Status Indicators
- Amplified Tracking ±0.9
- Phase Tracking ±13
- Fully Protected VSWR ∞:1

AMP

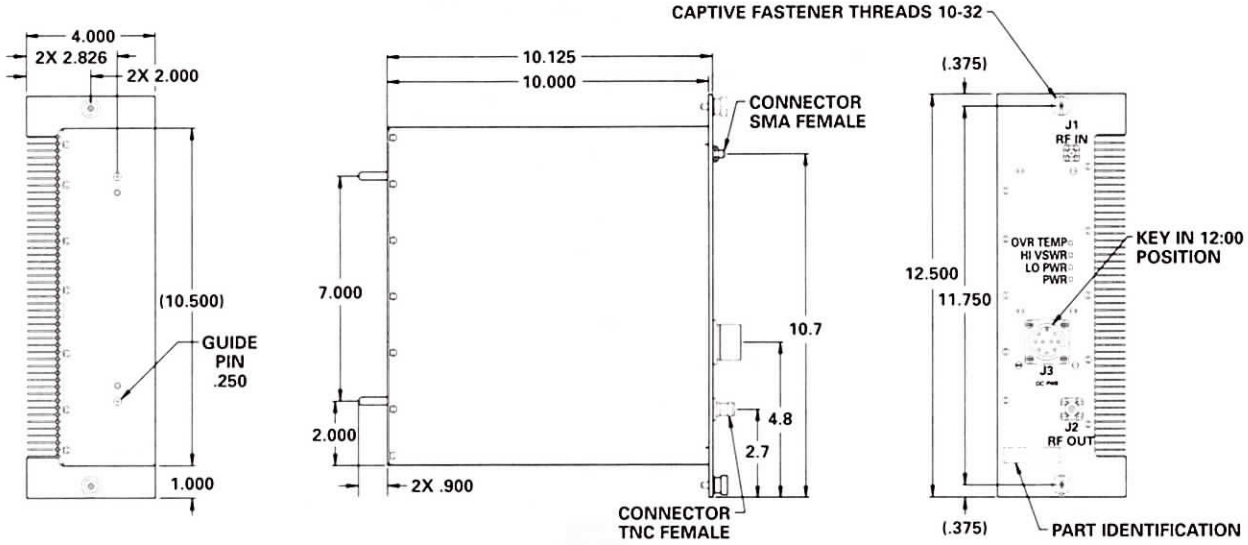

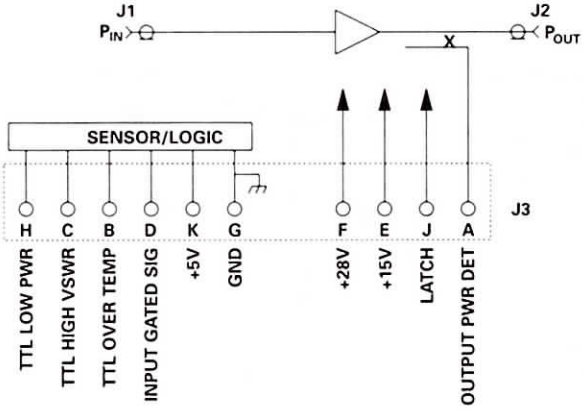

PREAMP PWR CONN PINOUTS
P/N AMP 97 3102A-18-19P

A	PEAK OUTPUT PWR
B	OVER TEMP
C	VSWR FAULT
D	INPUT GATED SIGNAL
E	+15V
F	+28V
G	GROUND
H	LOW OUTPUT PWR
J	LATCH
K	+5V

MATING PLUG CONNECTOR:
P/N BENDIX ACS06E18-19S(025)

GUARANTEED PERFORMANCE

Parameter		Min	Typ	Max	Units	Conditions
Operating Frequency		1215		1400	MHz	
Gain		39	39.5	40	dB	
Peak Power Output		49	49.5	50	dBm	PRF +304 Hz PW = 320 µSec
RF Power In	*Operate*	+10			dBm	
	No Damage	+18				
VSWR	*In*			1.4/1		
	Out			1.4/1		
Amplitude Tracking				±0.9	dB	
Phase Tracking				±13	Deg	
Harmonics	*II*	30			dBc	
	III	35			dBc	
Impedance			50		OHMS	Input / Output
Transition (Rise/Fall) Time		TBD		1.5		Pulse Shaping
DC Current			1.2	1.5	Amp	At +28 VDC
				.5	Amp	At -15 VDC
			0.2	1.2	Amp	At +15 VDC
			0.1	1.0	Amp	At +5 VDC
Operating Temperature		-20	+25	+55	°C	TA

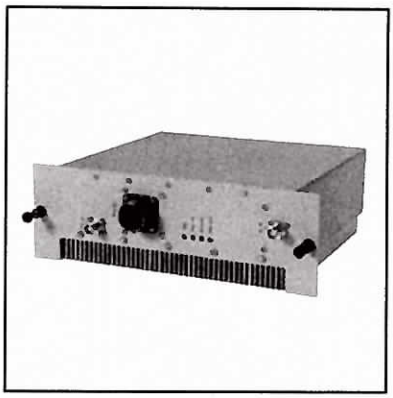

MODEL NUMBER CAMD9224

L-Band High Power Amplifier

FEATURES

- 1215-1400 MHz
- 11.5 dB Gain Typ.
- Status Indicators
- Amplifier Tracking ±0.9
- Phase Tracking ±13
- Fully Protected VSWR ∞:1

AMP

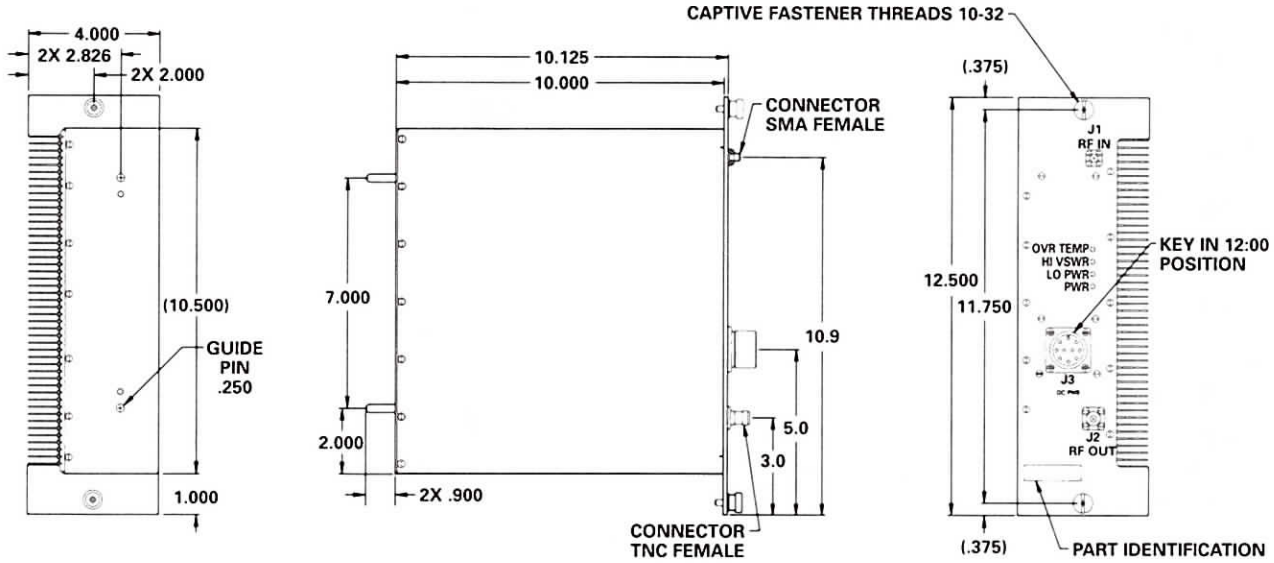

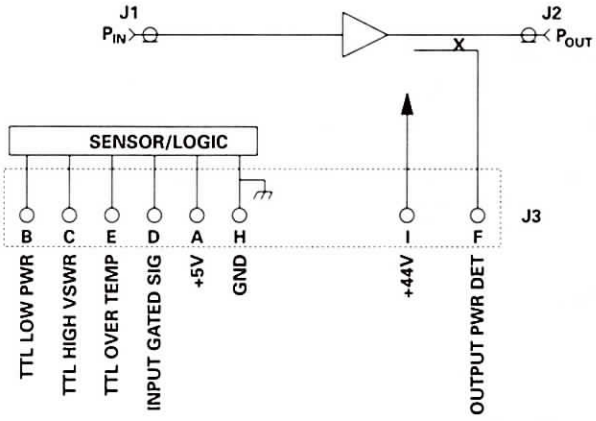

DRIVER / HPA PWR CONN PINOUTS
P/N AMP 97 3102A-20-16P

A	+5V
B	N/C
C	LOW OUTPUT POWER
D	LATCH INPUT
E	OVER TEMP
F	VSWR FAULT
G	PEAK OUTPUT PWR
H	GROUND
I	+44V

MATING PLUG CONNECTOR:
P/N AMP 97-3106A-20-16S (621)

GUARANTEED PERFORMANCE

Parameter		Min	Typ	Max	Units	Conditions
Operating Frequency		1215	12.5	1400	MHz	
Gain		12		13	dB	
Peak Power Output		61.5	62	62.5	dBm	PRF +304 Hz PW = 320 µSec
RF Power In	*Operate*	49.45	49.5	49.55	dBm	
	No Damage	51.5			dBm	
VSWR	*In*			1.5/1		
	Out			1.4/1		
Amplitude Tracking				±0.9	dB	
Phase Tracking				±13	Deg	
Harmonics	*II*	30			dBc	
	III	35			dBc	
Impedance			50		OHMS	
Transition (Rise/Fall) Time		TBD			nSec	Pulse Shaping
DC Current				16.0	Amp	At +44 VDC
				1.0	Amp	At +5 VDC
Operating Temperature		-20	+25	+55	°C	TA

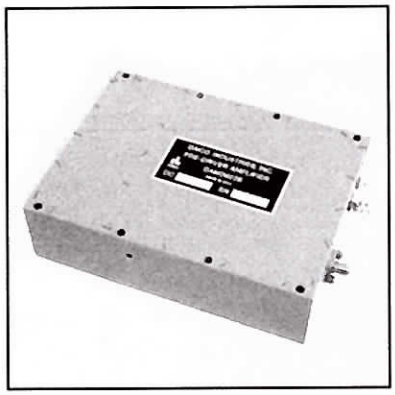

MODEL NUMBER DAMD9227

25W Power Output Amplifier

FEATURES

- 2700-2900 MHz
- 40 dBm Gain
- 25 Watt Power Output
- Amplitude Droop 0.13 dB
- Fully Protected VSWR infinite:1 any Phase

AMP

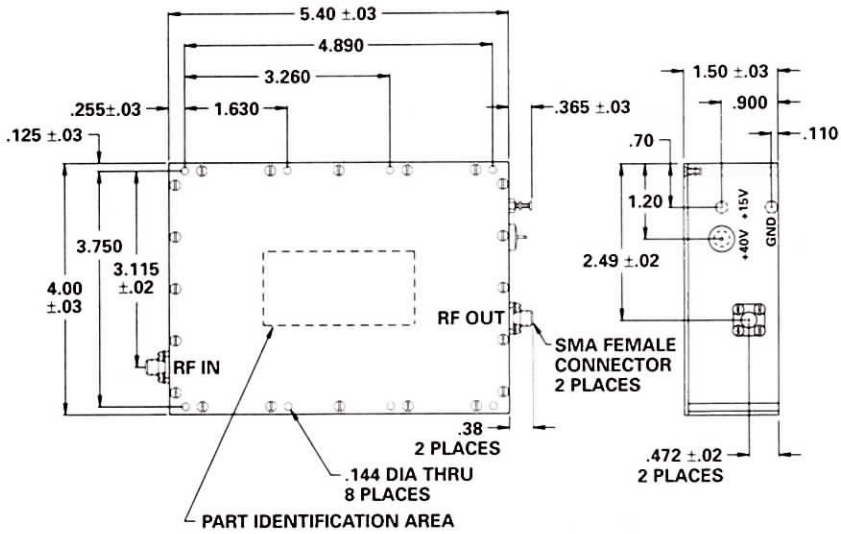

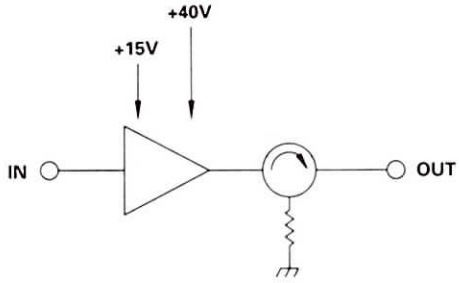

TYPICAL PERFORMANCE
at 25°C

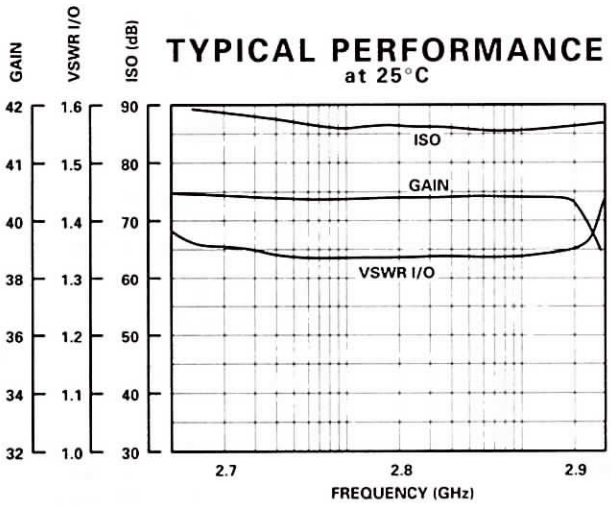

GUARANTEED PERFORMANCE

Parameter		Min	Typ	Max	Units	Conditions
Operating Frequency		2.7		2.9	GHz	
RF Power P_{IN}		+3		+15	dBm	
RF Out, P_{1dB} Comp		42.8	43.5	45.3	dBm	
Duty Cycle				12	%	
Gain			40		dBm	
Pulse Width				135	µSec	
Amplitude Droop				0.2	dB	
Phase Tracking Between				10	DEG	RMS
Input / Output VSWR			1.3/1	1.5/1		In 50 Ohm System
Pulse-to-Pulse Stability		-0.05		+0.05	DEG	
Efficiency			40		%	On 40V Supply
DC Voltage			1.3	3.5	A	At +15 VDC
			0.2	0.6	A	At +40 VDC (Average Current)
Package						5.4" X 4.00" X 1.50" with SMA Female Connector, Voltage and GND Pins per LM Drawing
Environment	*Moisture*	5		95	%	Relative Humidity, Non-Condensing
	Altitude	-1,000		+10,000	Ft	Operation and Non-Operation
Operating Temperature		0		+50	°C	TA
		-40		+70	°C	TA

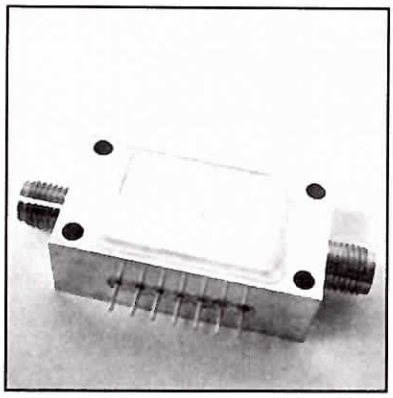

MODEL NUMBER DAML6280

Variable Gain Low Noise Amplifier

FEATURES

- 80-700 MHz
- Gain 29 dB
- Noise Figure 2 dB
- Attenuation Range 31 dB
- LSB 1 dB

AMP

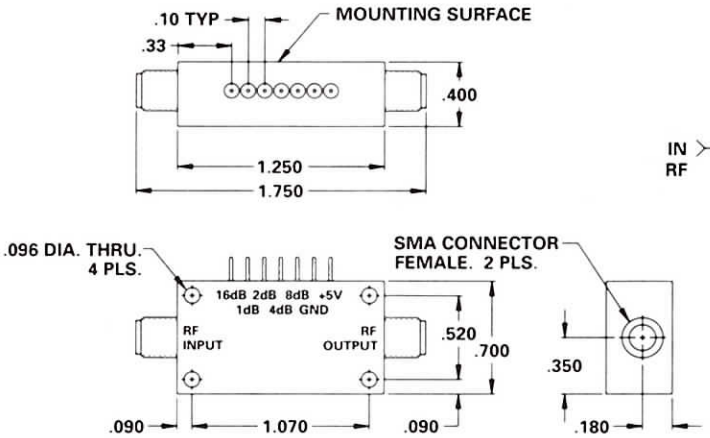

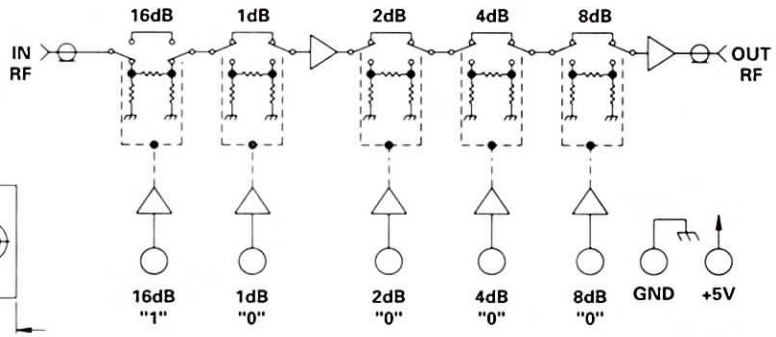

TYPICAL PERFORMANCE

at 25°C

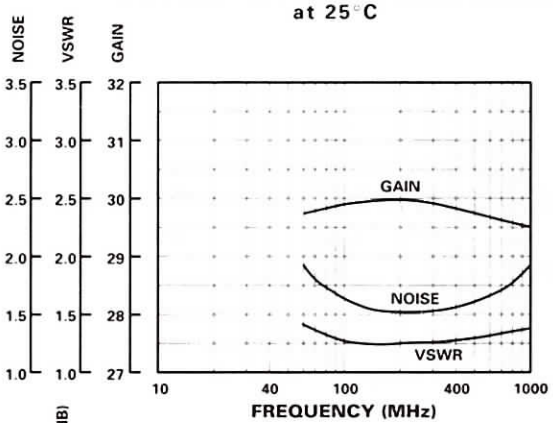

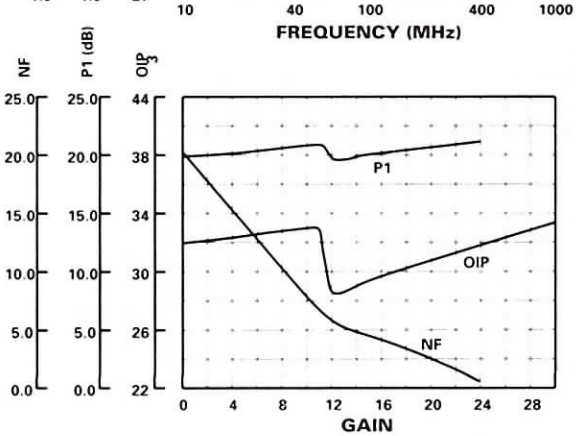

GUARANTEED PERFORMANCE

Parameter		Min	Typ	Max	Units	Conditions
Operating Frequency		60		700	MHz	
DC Current			190	250	mA	At +5 VDC Supply
Control Logic					MHz	5 Line TTL, "0"= Thru "1"= Atten
Control Current				±10	µA	30 dB Gain
Gain		29.25	29.75	30.25	dB	60 MHz
		29.75	30	30.25	dB	200 MHz
		29.25	27.75	30.25	dB	700 MHz
Noise Figure			1.8	2	dB	60 MHz
			1.52	1.7	dB	200 MHz
			1.62	1.8	dB	700 MHz
Impedance			50		OHMS	
Intercept Points	*OIP3*	+30	+31		dBm	Except 16 and 17 dB Gain
		+28	+29		dBm	At 16 and 17 dB Gain
Compression	*P1dB*	+19	+20		dBm	Except 16 and 17 dB Gain
		+17	+18		dBm	At 16 and 17 dB Gain
VSWR				1.3/1		16 to 32 dB Gain
				2/1		-1 to 15 dB Gain
Attenuation	*Range*	0		31	dB	
	Steps				dB	1, 2, 4, 8, 16 dB
	Accuracy				dB	±(.3 dB +2% of Atten)
Phase Vs. Atten			4.0	±10	Deg	
Phase Matching			1.0	±10	Deg	Unit to Unit in Sets of 2
Amplitude Matching			0.5	±1	dB	Unit to Unit in Sets of 2 With same Atten Setting
Operating Temperature		-45	+25	+85	°C	TA

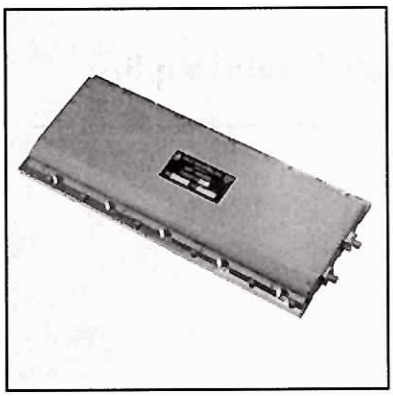

MODEL NUMBER CAMH9115

S-Band High Power Amplifier

FEATURES

- 2.7-2.9 GHz
- 60.5 dBm Output Power
- Medium Pulse Operation up to 200 µSec
- 12% Duty Cycle

AMP

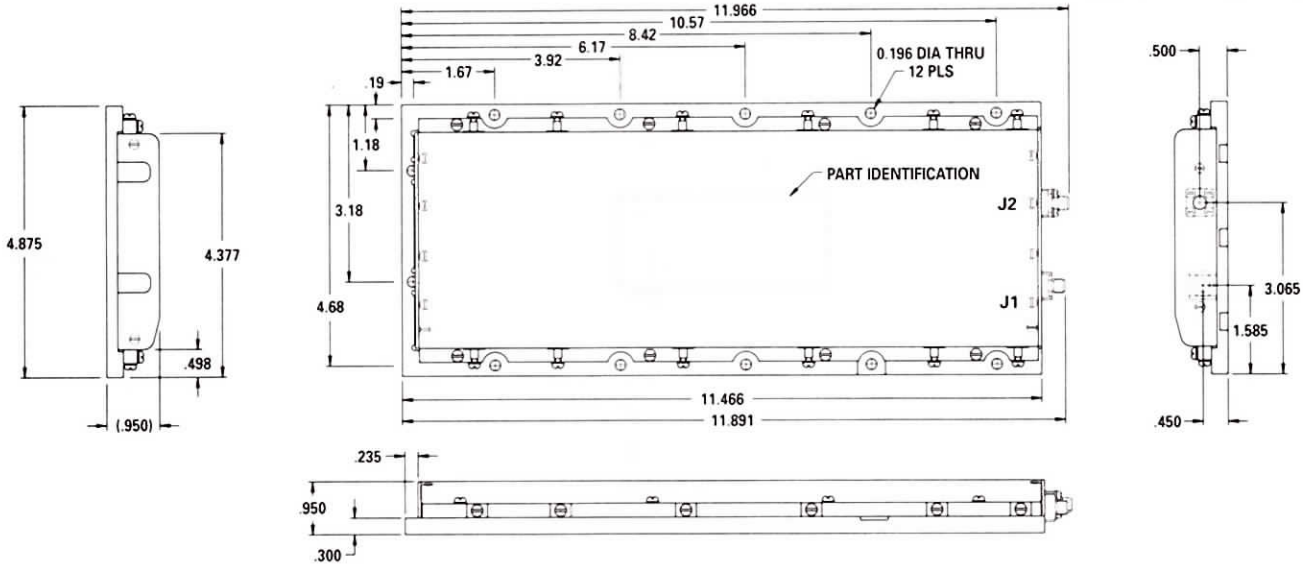

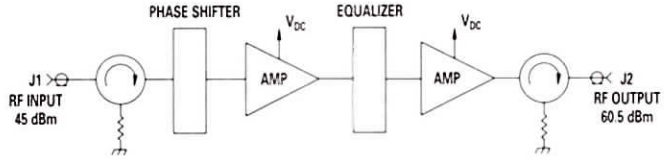

TYPICAL PERFORMANCE

at 25°C

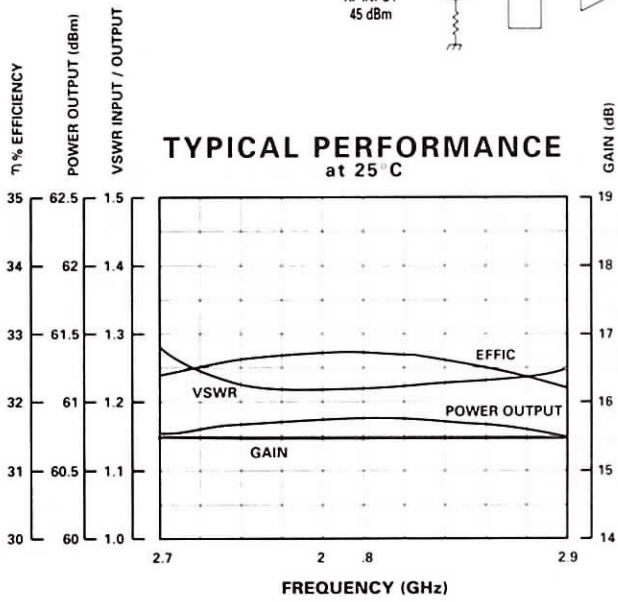

GUARANTEED PERFORMANCE

Parameter		Min	Typ	Max	Units	Conditions
Operating Frequency		2.7		2.9	GHz	
RF Power P_{in}		44.8	45	45.3	dBm	
RF Out P_{1dB} Comp		60.3	60.5	61.0	dBm	
Gain			17		dB	
Duty Cycle				12	%	
Pulse Width				200	µSec	
Amplitude Droop				0.35	dB	
Phase Tracking Between				±8	DEG	RMS
Input / Output VSWR			1.3/1	1.5/1		In 50 Ohm System
Pulse-to-Pulse Stability		-0.05		+0.05	DEG	Test By Customer, Not Daico
RF Power Pin		36.7	37.0	37.6	dBm	
Efficiency		32	34		%	On 40 V Supply
DC Current			10.8	11	AMP	At +37 VDC (Average Current)
Package						11.9" X 4.87" X 0.95" H with SMA Female Connector
Environment	*Moisture*	5		95	%	Relative Humidity, Non Condensing
	Altitude	-1000		+10000	Ft	Operation and Non-Operation
Operating Temperature		0		+50	°C	TA
		-40		+70	°C	TA

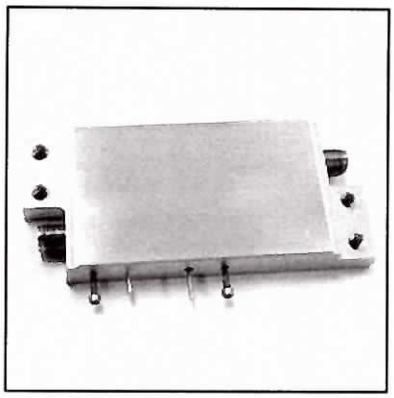

MODEL NUMBER CAMD6254

30 MHz RF Driver Amplifier

FEATURES

- 27-33 MHz
- SMA Connectors
- 41 dB Gain
- +34 dBm PldB
- 3 dB Typical Noise Figure

AMP

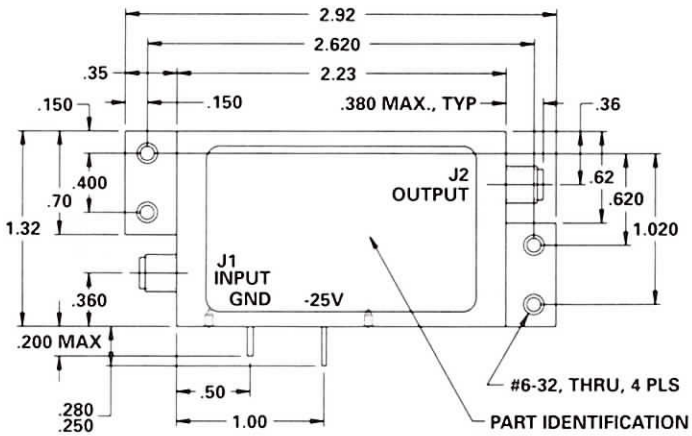

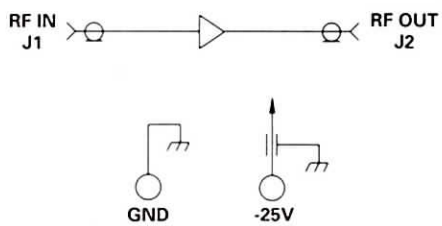

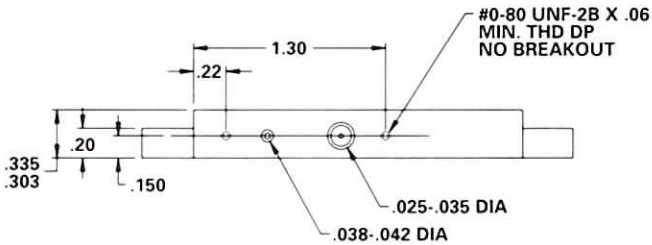

TYPICAL PERFORMANCE

at 25°C

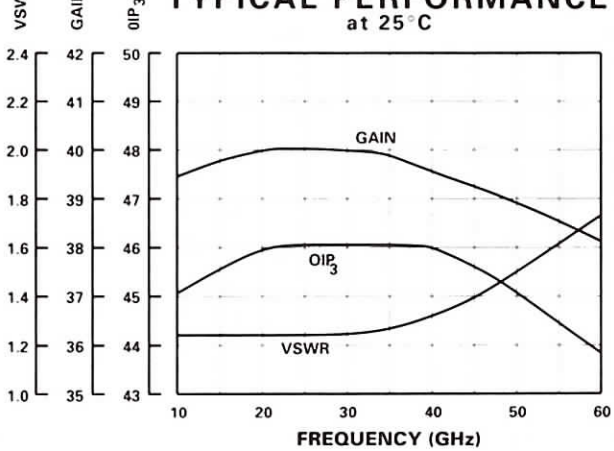

GUARANTEED PERFORMANCE

Parameter		Min	Typ	Max	Units	Conditions
Operating Frequency		27		33	MHz	
DC Power				440	mA	-25 VDC
Gain		29.5	41	42	dB	At 30 MHz
Noise Figure			3		dB	
VSWR	*Input*		1.5			
	Output		1.5			
P1 dB Comp		+27	+34		dBm	
Intercept Point 3rd		+43	+46		dBm	
Operating Temperature		-55	+25	+85	°C	TA

MODEL NUMBER
CAMG6201

RF Solid State Amplifier

FEATURES

- Gain 22 dB
- Gain Flatness 1 dB Max
- Noise Figure 5 dB Max
- SMA Connector

AMP

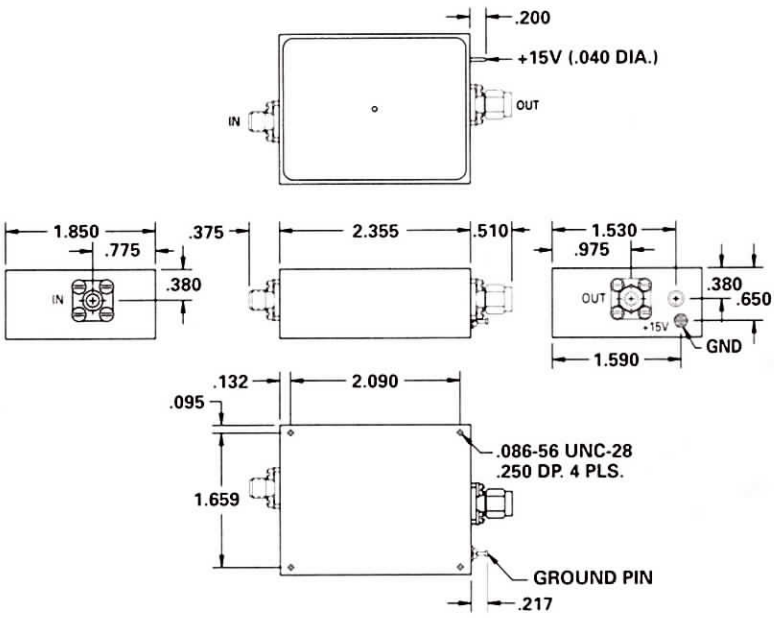

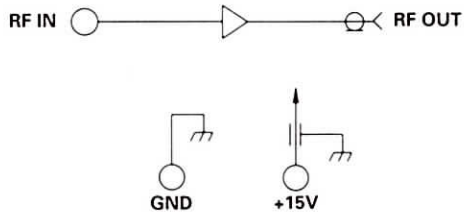

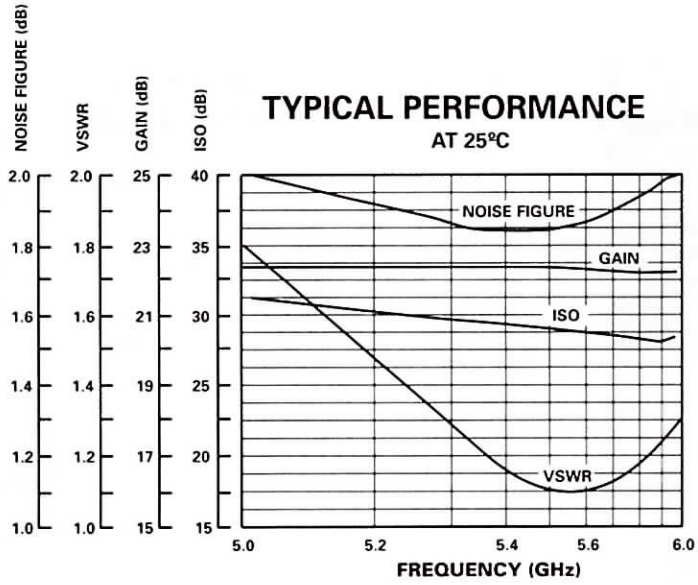

GUARANTEED PERFORMANCE

Parameter		Min	Typ	Max	Units	Conditions
Operating Frequency		5000		6000	MHz	
DC Current				160	mA	At +15 VDC Supply
Gain		20		23		Negative Temperature Compensated
Isolation (S)		25	35			
		50	60		dB	1000 - 2000 MHz
Noise Figure				20	dB	
VSWR				1.51/1		
Phase Noise				-89	dBc/Hz	100 Hz
				-123	dBc/Hz	1 kHz
				-150	dBc/Hz	10 kHz
				-153	dBc/Hz	100 Hz
				-155	dBc/Hz	1 MHz
				-156	dBc/Hz	10 MHz
Impedance			50		OHMS	
Intercept Points	*2nd*	+32			dBm	
	3rd	+22			dBm	
RF Power	*Output*	+12			dBm	P1 dB
	Input	+20			dBm	Max Input Power
Operating Temperature		-45		+55	°C	TA

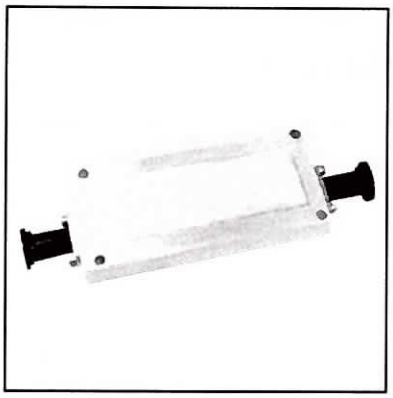

MODEL NUMBER DAML6231

X-Band LNA

FEATURES

- 8.5-11 GHz
- SMA Connectors
- 5 dB Noise Figure
- +40 dBm 3rd Order Intercept Point
- 32 dB Gain

AMP

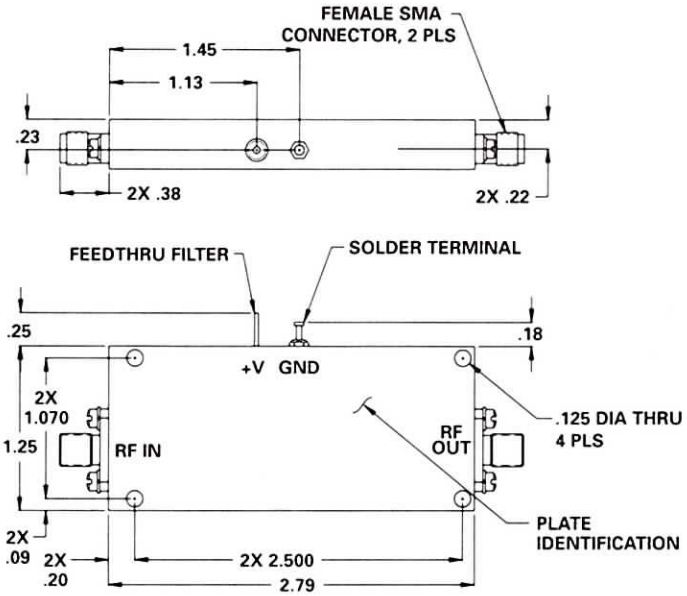

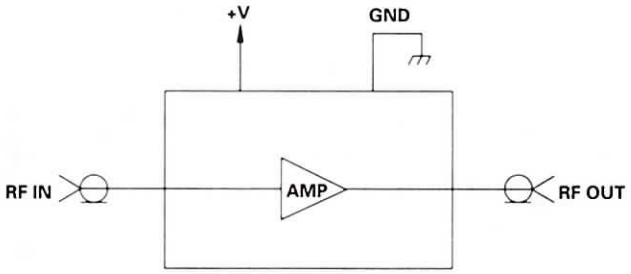

TYPICAL PERFORMANCE at 25°C

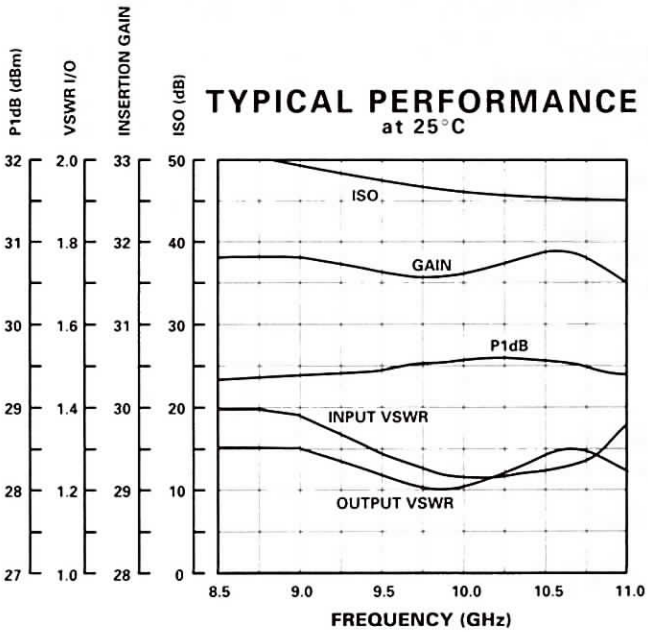

GUARANTEED PERFORMANCE

Parameter	Min	Typ	Max	Units	Conditions
Operating Frequency	8.5		11	GHz	
DC Current		900		mA	At +15 VDC Supply
Small Signal Gain	30	32		dB	
3rd Order Intercept Point	39	40		dBm	
Noise Figure		5	6	dB	At 25°C
VSWR *In/Out*		1.5/1	1.6/1		
P_{out} 1dB Comp	29	30		dBm	
Operating Temperature	-40		+85	°C	TA

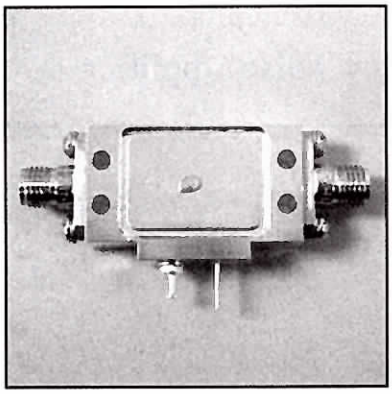

MODEL NUMBER DAML6266

Low Noise Amplifier

FEATURES

- 20-100 MHz
- 30 dB Gain
- 1.5 dB Noise Figure
- Gain Flatness 1 dB Max
- SMA Connectors
- Available in Matched Sets of 2

AMP

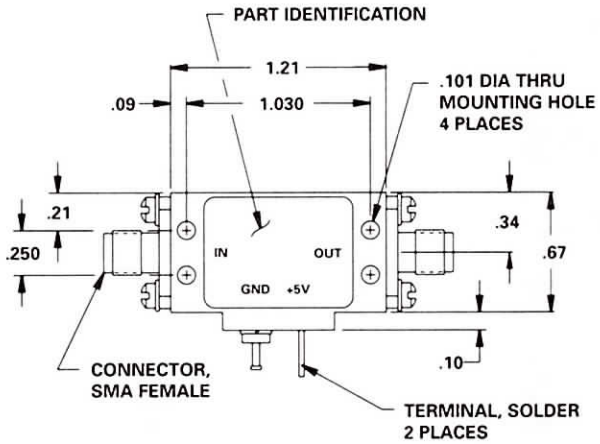

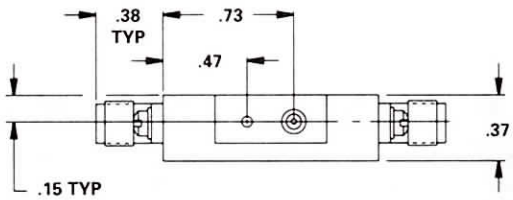

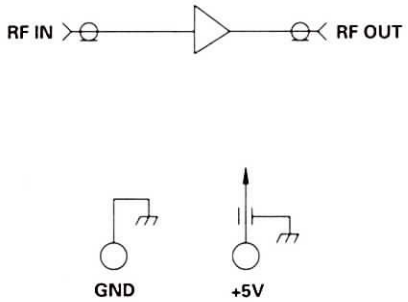

TYPICAL PERFORMANCE

AT 25• C

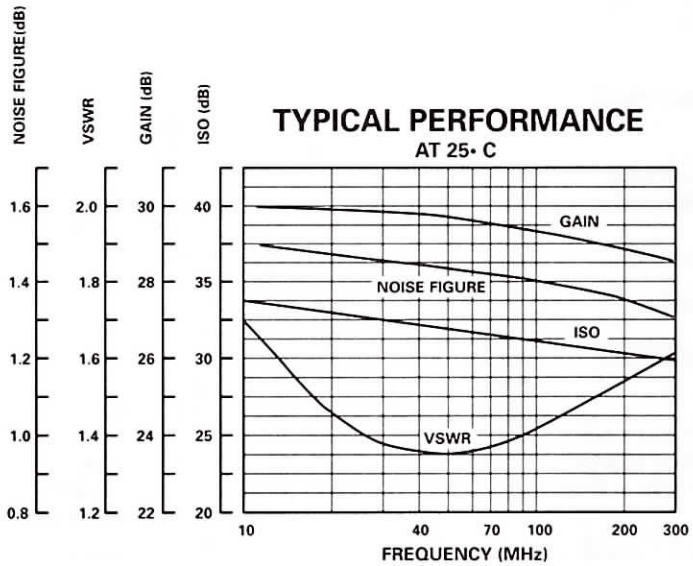

GUARANTEED PERFORMANCE

Parameter		Min	Typ	Max	Units	Conditions
Operating Frequency		20		100	MHz	
DC Current				190	mA	At +5 VDC Supply
Small Signal Gain		25			dB	
Isolation (S_{12})		31			dB	
Noise Figure				1.8	dB	
VSWR	*In/Out*			1.51/1		
Impedance			50		OHMS	
Intercept Points	*2nd*				dBm	
	3rd	+27			dBm	
RF Power	*Output*	+17			dBm	1 dB Compression
	(no damage) Input	+18			dBm	without Limiter
Unit-To-Unit						
Gain Tracking		-1		+1		Set of 2 Units
Phase Tracking		-10		+10	degrees	Set of 2 Units
Operating Temperature		-40	+25	+85	°C	TA

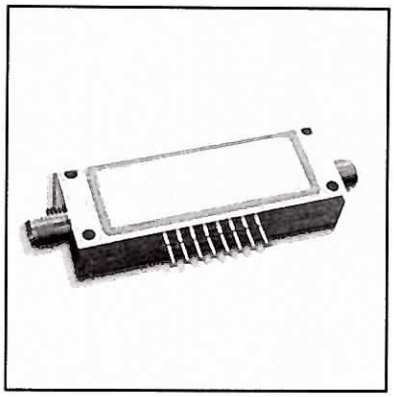

MODEL NUMBER DAML6273

Variable Gain Low Noise Amplifier

FEATURES

- 60-700 MHz
- Gain 29 dB
- 2 dB Noise Figure
- Attenuation Range 31 dB
- LSB 1 dB
- Limiter Included
- Detected Output Port

AMP

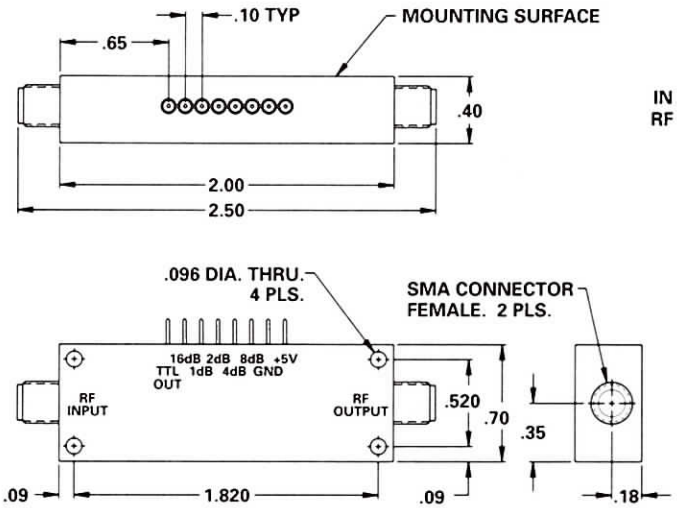

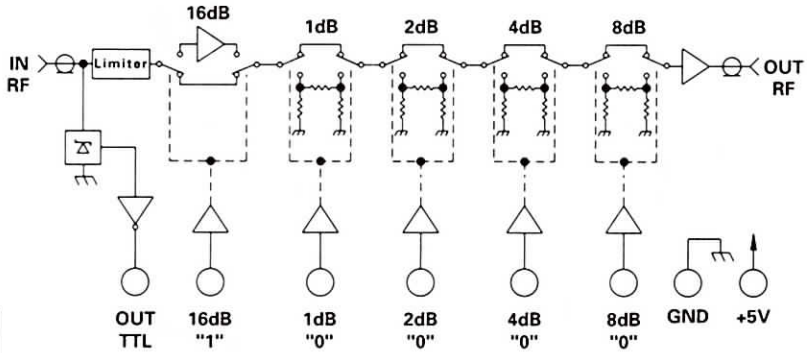

GUARANTEED PERFORMANCE

Parameter		Min	Typ	Max	Units	Conditions
Operating Frequency		60		700	MHz	
DC Current				250	mA	At +5 VDC Supply
Control Logic					MHz	5 Line TTL, "0"= Thru "1"= Atten
Control Current				±10	µA	30 dB Gain
Gain		29.25	29.75	30.25	dB	60 MHz
		29.75	30	30.25	dB	200 MHz
		29.25	27.75	30.25	dB	700 MHz
Noise Figure			1.8	2	dB	60 MHz
			1.52	1.7	dB	200 MHz
			1.62	1.8	dB	700 MHz
Impedance			50		OHMS	
Intercept Points	*OIP3*	+30	+31		dBm	Except 16 and 17 dB Gain
		+28	+29		dBm	At 16 and 17 dB Gain
Compression	*P1dB*	+19	+20		dBm	Except 16 and 17 dB Gain
		+17	+18		dBm	At 16 and 17 dB Gain
VSWR				1.3/1		16 to 32 dB Gain
				2/1		-1 to 15 dB Gain
Attenuation	*Range*	0		31	dB	
	Steps				dB	1, 2, 4, 8, 16 dB
	Accuracy				dB	±(.3 dB +2% of Atten)
Phase Vs. Atten				±10	Deg	
Phase Matching				±10	Deg	Unit to Unit in Sets of 2
Amplitude Matching				±1	dB	Unit to Unit in Sets of 2 With same Atten Setting
Operating Temperature		-45		+85	°C	TA

TYPICAL PERFORMANCE

AT 25°C

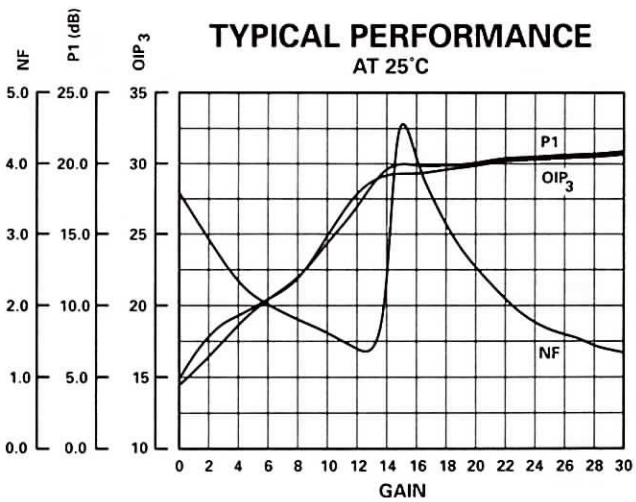

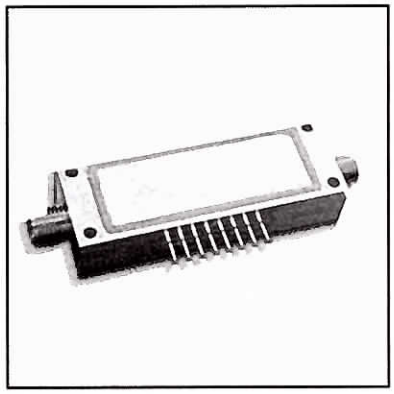

MODEL NUMBER DAML6274

Variable Gain Low Noise Amplifier

FEATURES

- 0.7-2.1 GHz
- 30 dB Gain
- 1.5 dB Noise Figure
- Variable Gain in 1 dB Steps
- SMA Connectors
- Available in Matched Sets of 2

AMP

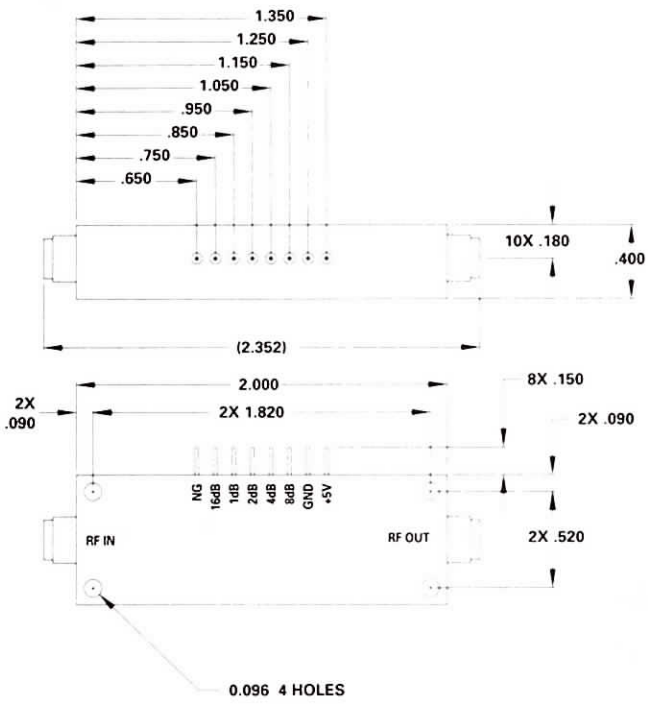

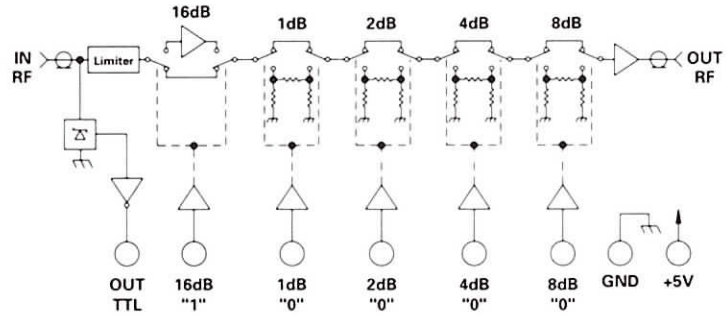

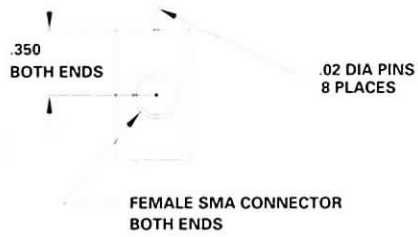

TYPICAL PERFORMANCE

AT 25°C

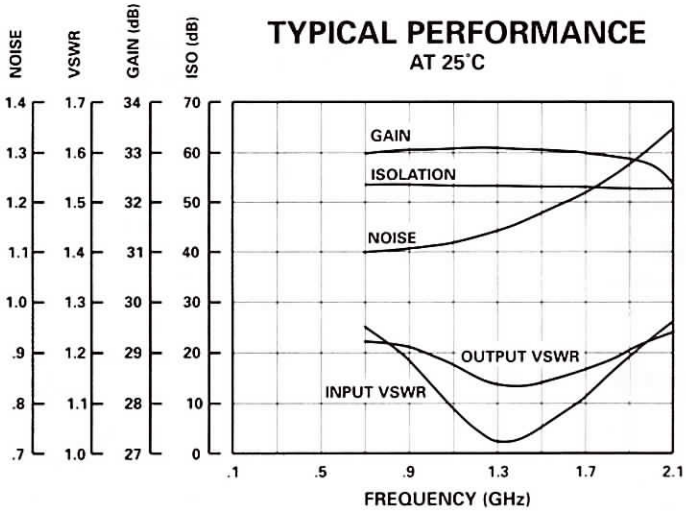

GUARANTEED PERFORMANCE

Parameter		Min	Typ	Max	Units	Conditions
Operating Frequency		700		2100	MHz	
DC Current				350	mA	At +5 VDC Supply
Small Signal Gain		29.5	30		dB	
Control Logic						5 Line TTL, "1" = Attenuation
P out 1 dB Comp		+18	+19		dBm	
Noise Figure			1.35	1.5	dB	At 25°C and 30 dB Gain
VSWR In/Out			1.51/1	1.61/1		
Attenuation	*LSB*	1			dB	1, 2, 4, 8. 16 dB Bits
	Range	0		31	dB	±(0.3 + 5% of Attenuation
	Accuracy				dB	Setting in dB) dB
3rd Order I.P.		+32	+35		dBm	At 0 Attenuation State
Operating Temperature		-40		+85	°C	TA

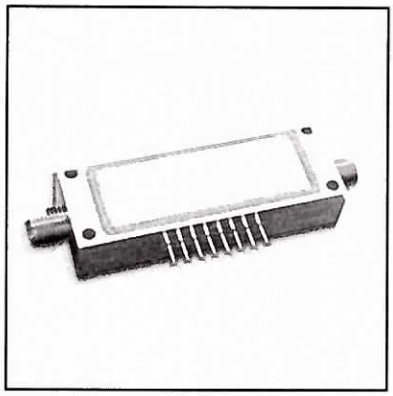

MODEL NUMBER DAML6275

Variable Gain Low Noise Amplifier

FEATURES

- 1.9-2.0 GHz
- 30 dB Gain
- 1.5 dB Noise Figure
- Variable Gain in 1 dB Steps
- SMA Connectors
- Available in Matched Sets of 2

AMP

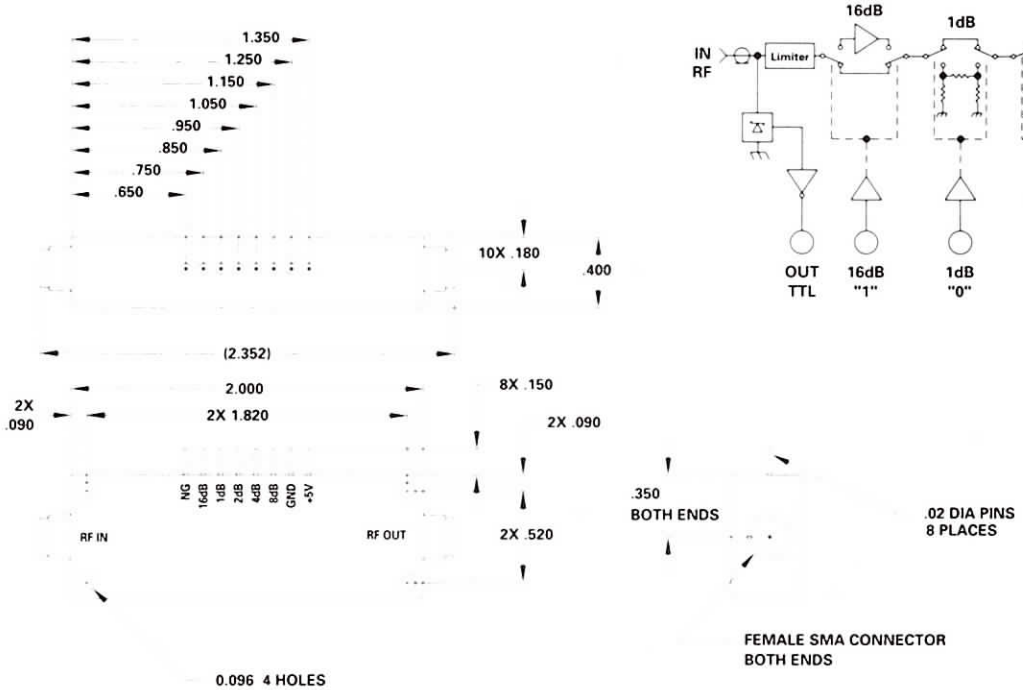

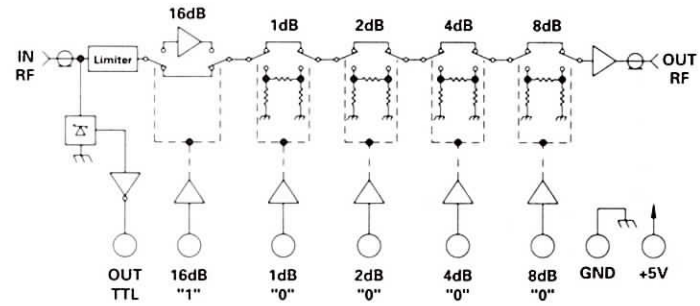

TYPICAL PERFORMANCE

AT 25•C

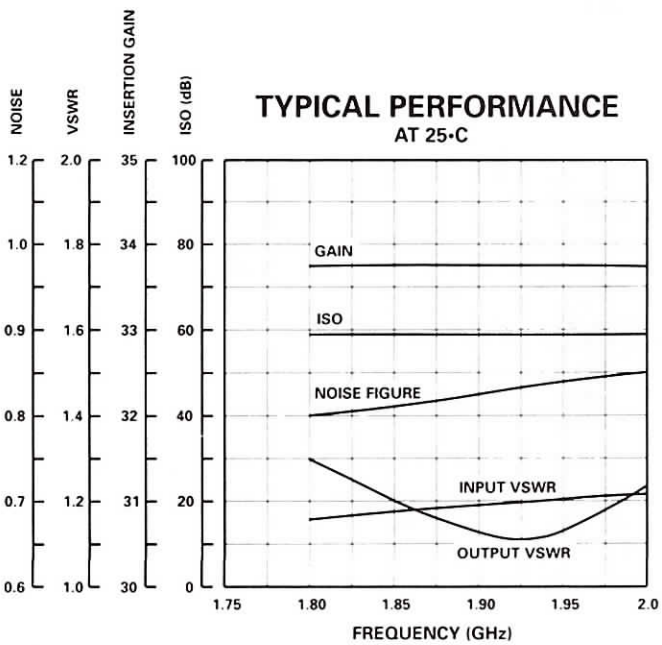

GUARANTEED PERFORMANCE

Parameter		Min	Typ	Max	Units	Conditions
Operating Frequency		1900		2000	MHz	
DC Current				350	mA	At +5 VDC Supply
Small Signal Gain		29.5	30		dB	
Control Logic						5 Line TTL, "1" = Attenuation
P out 1 dB Comp		+18	+19		dBm	
Noise Figure			1.35	1.5	dB	At 25°C and 30 dB Gain
VSWR In/Out			1.51/1	1.61/1		
Attenuation	*LSB*	1			dB	1, 2, 4, 8. 16 dB Bits
	Range	0		31	dB	±(0.3 + 5% of Attenuation
	Accuracy				dB	Setting in dB) dB
3rd Order I.P.		+32	+35		dBm	At 0 Attenuation State
Operating Temperature		-40		+85	°C	TA

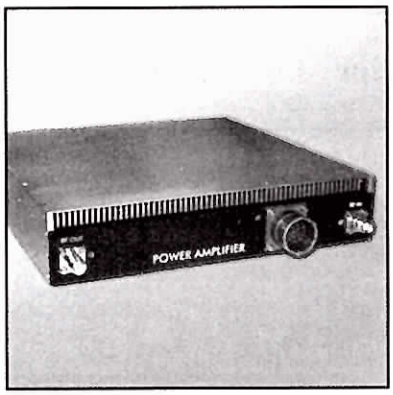

MODEL NUMBER CAMH9126

L-Band Power Amplifier

FEATURES

- L-Band Op. Freq.
- 52 dB Gain
- 61 dBm Pout
- 45% Efficiency

AMP

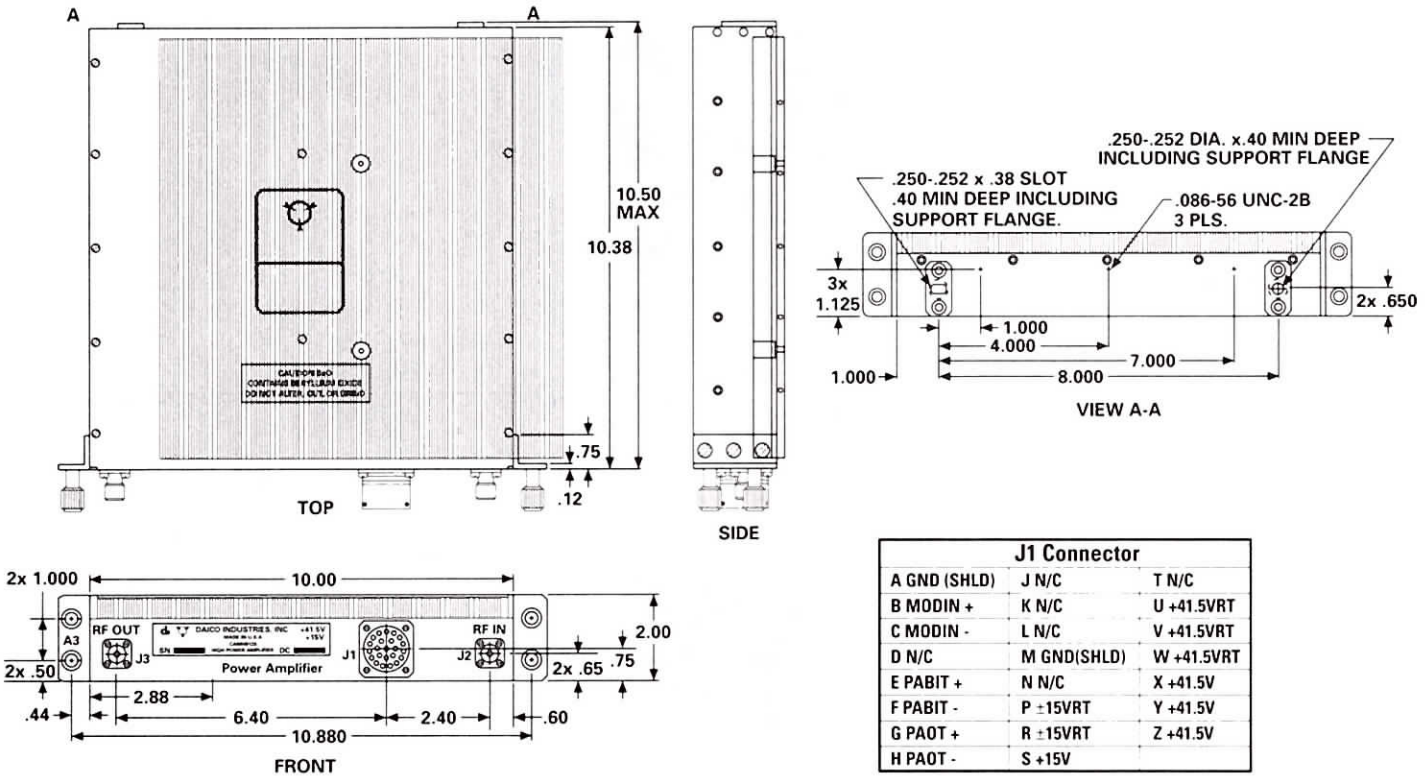

J1 Connector		
A GND (SHLD)	J N/C	T N/C
B MODIN +	K N/C	U +41.5VRT
C MODIN -	L N/C	V +41.5VRT
D N/C	M GND(SHLD)	W +41.5VRT
E PABIT +	N N/C	X +41.5V
F PABIT -	P ±15VRT	Y +41.5V
G PAOT +	R ±15VRT	Z +41.5V
H PAOT -	S +15V	

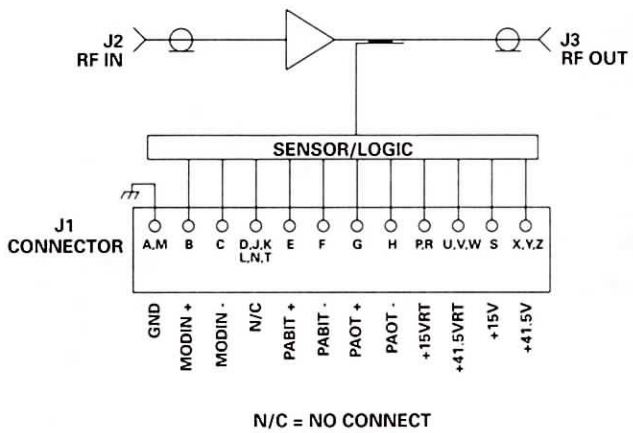

N/C = NO CONNECT

GUARANTEED PERFORMANCE

Parameter		Min	Typ	Max	Units	Conditions
Operating Frequency		1215		1400	MHz	
Gain		50	52		dB	
Peak Power Output		60	61	63	dBm	PRF 3.57 KHz PW = 15 µSec
RF Power In:	*Operate*	+7	+10	+18	dBm	
	No Damage			+20		
VSWR	In		1.4:1	1.5:1		
	Out		1.4:1	1.5:1		
Pulse Delay On		200	435	600	nSec	
Puse Delay Off		200	400	600	nSec	
Harmonics	II	30	35		dBc	
	III	30	38		dBc	
Impedance			50		OHMS	
Transition (Rise/Fall) Time		80	120	500	µSec	
DC Current			5.3	7.5	AMP	At +41.5 VDC
			0.45	0.7	AMP	At +15 VDC
Operating Temperature		-46	+25	+52	°C	TA

MODEL NUMBER CAMG9127

Power Amplifier

FEATURES

- 1.75-1.808 GHz
- 28 dB Gain
- 25 W Power Output
- CW Power Output Compatible
- SMA Connectors

AMP

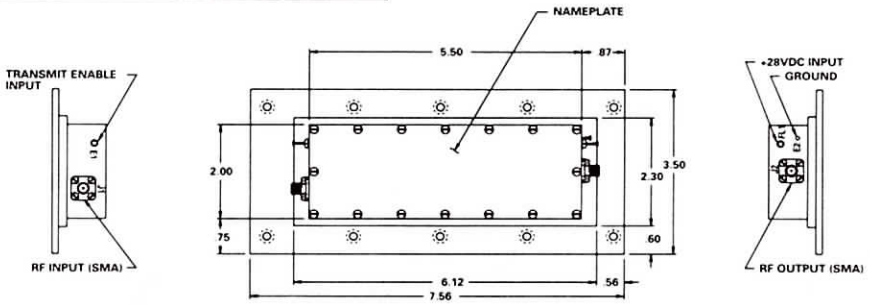

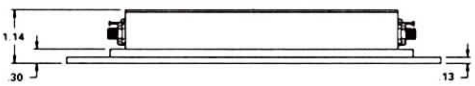

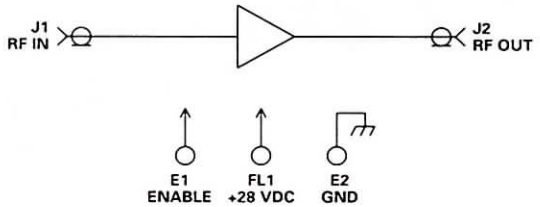

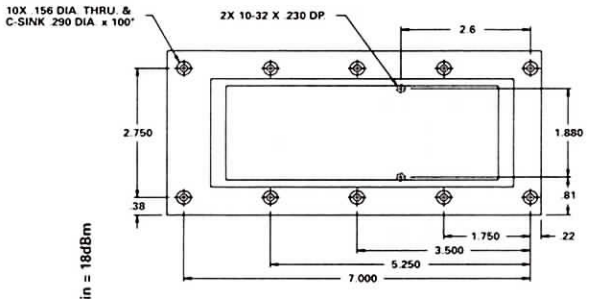

TYPICAL PERFORMANCE

AT 25°C

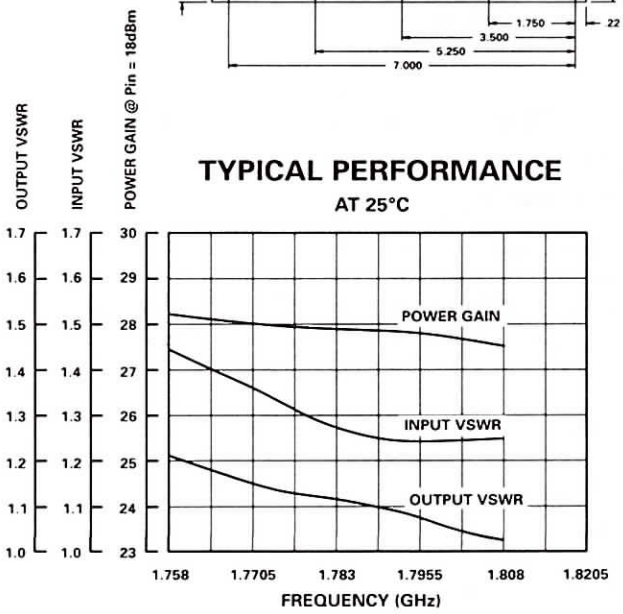

GUARANTEED PERFORMANCE

Parameter	Min	Typ	Max	Units	Conditions
Operating Frequency	1750		1808	MHz	
RF Output Power	44	45		dBm	
Power Gain	27	28		dB	All Conditions
RF Input Power (pulse or CW)	17	18	20	dBm	
Impedance		50		OHMS	
I/O VSWR	1.5/1	1.3/1			
Load VSWR			Infinity		No Damage All Phase
Harmonics	45	48		dBc	2nd & 3rd
Spurious	65			dBc	
DC Input	23	28	32	VDC	
DC Current		4.25	4.75	A	
Enable Timing (rise / fall)			40/20	µsec	0 - 0.7V = "Enable" 1.3 - 15V = "Disable"
Operating Temperature	-54	+25	+71	°C	

Space Level Components

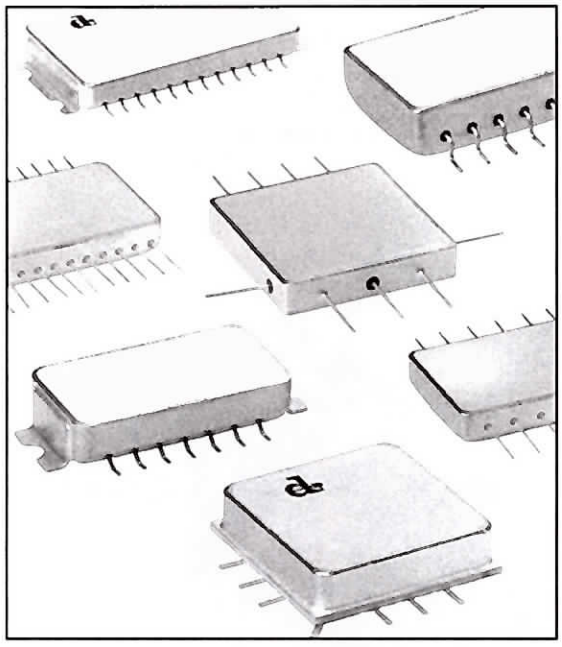

We have the expertise to design and build IF/RF/Microwave Components with the mechanical integrity and the proper radiation tolerance to operate reliably in space.

Our exceptional technical strength comes from our unique team of Engineers offering our customers innovative designs provided by unparalleled experience to provide optimum quality and reliability.

The DAICO engineering team uses the most advanced instrumentation and CAD/Cam equipment available to provide comprehensive solutions for modified standard products or fully custom designs Radiation Tolerant to 200 K Rads.

Engineering through delivery and beyond, your program is meticulously handled by our Space Program Management Team.

For products and information, please visit us at www.daico.com

DAICO *Industries*

310.507.3242 • FAX 310.507.5701 • www.daico.com

MFA

- **Multifunction Assemblies / Subassemblies**
- **Using DAICO's Standard Hi-Rel Processes**
- **Full Military Screening Available**
  (See Page 281)

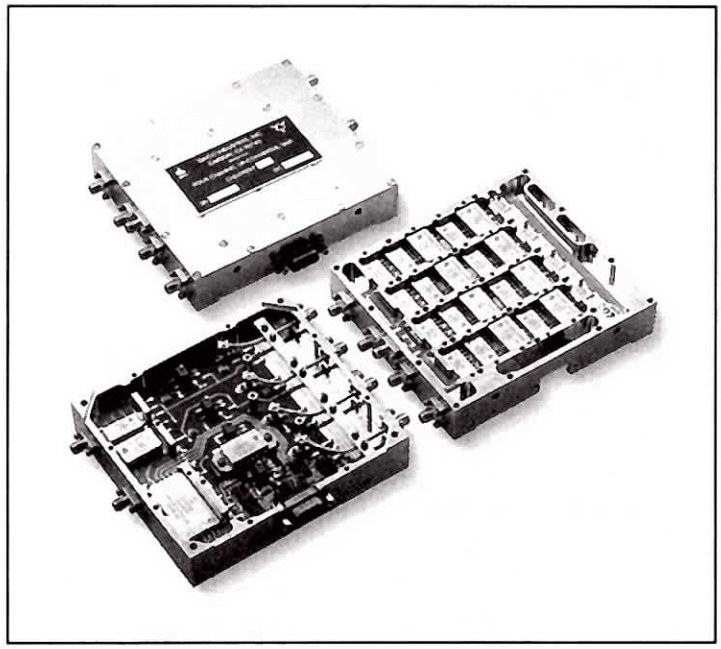

DAICO offers High-Integration, High-Density Components using thin-film hybrid technology combining the functionality of high-performance control products together with amplifiers, mixers, limiters, couplers and power dividers, as well as CMOS, TTL, ECL and other logic devices. We are able to offer increased reliability and substantially reduced size. These products offer significant cost reduction when compared to assemblies using conventional discrete packaged devices.

DAICO hybrids are designed by experienced RF Design Engineers using the latest CAE/CAD simulation and modeling software. Extensive circuit simulation and modeling, together with innovative designs, provide a minimal size product with superior performance and reliability, while at the same time curtailing costs. DAICO has demonstrated time and again that its name is synonymous with quality and value.

MFA Specification Table

Part Number	Description	Frequency Range MHz	Page
DSWA9072	Switch SP2T	0.1-30	34
100D9109	Antenna Switch	500-2000	35
CSWX9023	(4x5) Switch Matrix	450-600	36
100C1820	(3x3) Switch Matrix	20-2000	37
100C1739	(2x6) Switch Matrix	27-33	38
DSWX5034	(4x2) GaAs Switch Matrix	40-70	39
CSWX6152	PIN Diode RF Switch Matrix	20-1000	40
CSWM9125	Switch Matrix	800-4200	41
CSA09034	SP4T Switch Assembly	1-1200	42
DSWM9040	PIN Diode Swich SP40T	350-450	43
DSWM9073	Switch Assembly, RF 8 Channel	1-1200	44
DSWM6309	Switch Network	1-2000	45
CSWX1923	PIN Diode SP2T & SP6T	30-600	46
CHD09297	4 Channel Up-Converter	-	47
DHD06179	Switch Amplifier	1500-2000	48
CDS0892	Connectorized SP2T w/Amplifier	1550-1852	49
CSWT5103	Transfer Switch / Amplifier	50-70	50
CHD01940	Switch-Attenuator Amplifier HDMIC	9-10	51
DHD08059	L-Band / UHF Hybrid	180-2000	52
DHD08063	IF / AGC Hybrid	10-100	53
100D1797	Modulator Sub-Assembly	45-70	54
DA0900	Dual Attenuator / Amplifier	20-300	55
CSA09035	Digital Attenuator Assembly	1-1200	56
CDP0815	Phase Shifter, 4 Section	1300-1900	57
CDP0926	Phase Shifter, 4 Section Connectorized	1215-1400	58
CLM06149	Limiter	.10-30	59
100D0988	2 Port Antenna Selector	DC-400	60
100D0688	3 Port Antenna Selector	DC-400	61
100D1313	4 Port Antenna Selector	DC-400	62
100D1788	4 Port Antenna Selector	225-400	63
DSWX9078	4 Port Antenna Selector	DC-500	64
CSA09247	Combination T/R - Switch / LNA	1215-1400	65
CPD09102	Combiner	420-450	66
CHD09103	Switch Input	420-450	67
CHD09104	Amplifier / Attenuator / Divider	420-450	68
CHD09105	Switch / Attenuator / Phase Shifter	420-450	69
CHD09106	Switch / Attenuator / Phase Shifter	420-450	70
CHD09107	Combiner	420-450	71
DP0560	Phase Shifter, 3 Section	461-471	72
100D9288	Switch Selector UHF Antenna	-	73
CSWX9290	High Power Antenna Selector	420-450	74
CSF49110	Filter Band Pass	1300-2100	75
100D1827	T/R Switch / LNA Assembly	1215-1400	*see website*
CDX0947	HDMIC Connectorized SPST Switch / Amplifier	200-2000	*see website*
DX0907	HDMIC Attenuator / Limiter / Power Amplifier	100-400	*see website*
DP0877	HDMIC Phase Shifter / Amplifier / Switch	1300-1700	*see website*
DPS38017	HDMIC Phase Shifter / Power Dvider / Amplifier	1243-1253	*see website*

MODEL NUMBER DSWA9072

SP2T Switch/Attenuator

FEATURES

- 0.1-30 MHz
- 0.2 dB Amplitude Balance
- 0.5 DEG Phase Balance
- -115 dBm Switching Transients

MFA

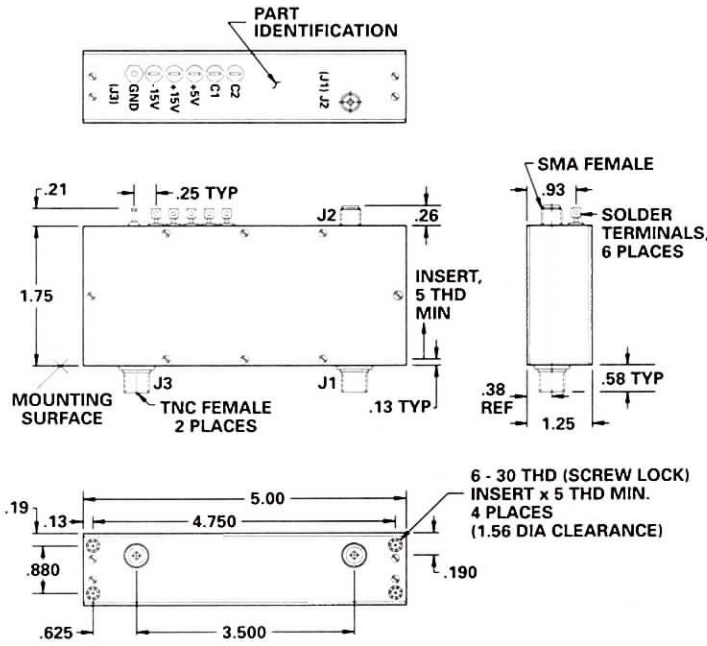

.xx = .02
.xxx = .010

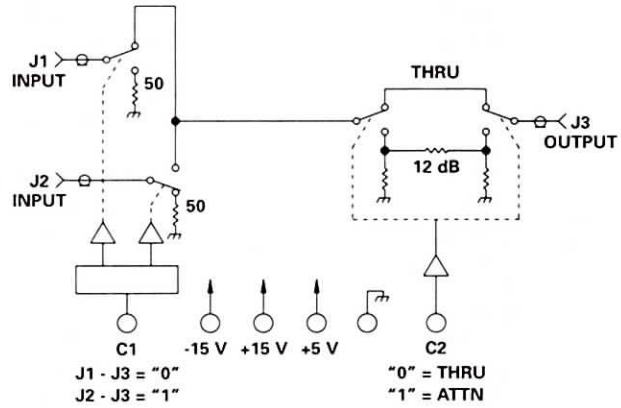

TYPICAL PERFORMANCE
at 25°C

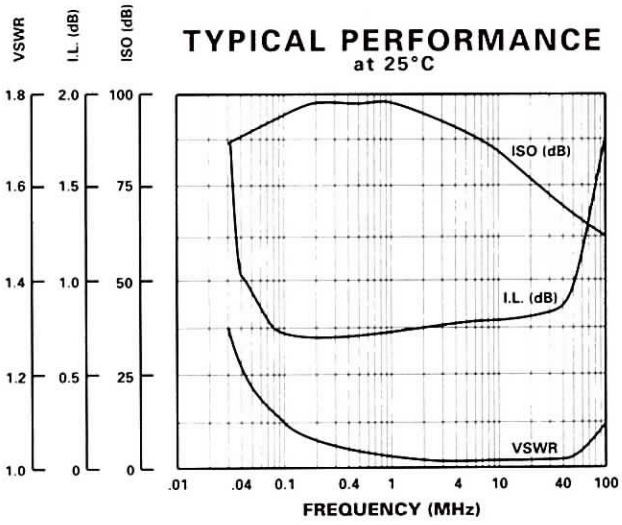

GUARANTEED PERFORMANCE

Parameter		Min	Typ	Max	Units	Conditions
Operating Frequency		0.1		30	MHz	
DC Current			2.2	10	mA	At +5 VDC Supply
			14	30	mA	At +15 VDC Supply
			2	5	mA	At -15 VDC Supply
Control Type	*C1*		TTL			"0" = J3 - J1, "1" = J3 - J2
	C2					"0" = Thru, "1" = Attn
Control Current	*High*		±20	±40	µA	VIH = +2.7 V
	Low		±200	±400	µA	VIL = +0.5 V
Amplitude Balance			±0.15	±0.2	dB	
Phase Balance			±0.5	±1.0	DEG	
Attenuation vs. Phase			±0.5	±1.0	DEG	
Insertion Loss			0.9	1.5	dB	
Isolation		65	75		dB	
VSWR	*Thru*		1.3/1	1.5/1		
	Termination		1.3/1	1.5/1		
Impedance			50		OHMS	
Switching Speed			120	300	µSec	50% TTL to 90% / 10% RF
Transition (Rise/Fall) Time			100		µSec	10% / 90% or 90% / 10% RF
Switching (Video) Transients			-115	-90	dBm	3 kHz Bandwidth 1 µSec On, 10 µSec Off
Intercept Points	*2nd*	+70	+81		dBm	
	3rd	+40	+45		dBm	
RF Power	*Operate*		+19	+17	dBm	0.1 - 1 MHz 0.1 dB Comp.
			+24	+21	dBm	1 - 30 MHz 0.1 dB Comp.
	No Damage			+27	dBm	
Operating Temperature		-55	+25	+85	°C	TA

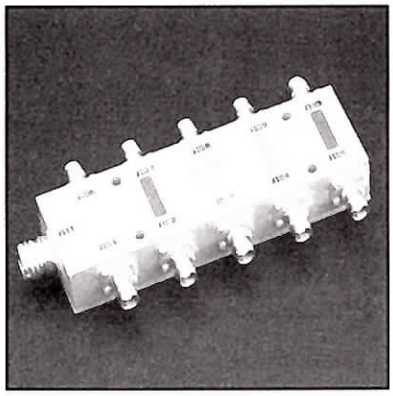

MODEL NUMBER CSA09109-1

Antenna Switch

FEATURES

- 500-2000 MHz
- Amplitude/Phase Tracking
- 0.7 dB Insertion Loss
- 80 dB Isolation

MFA

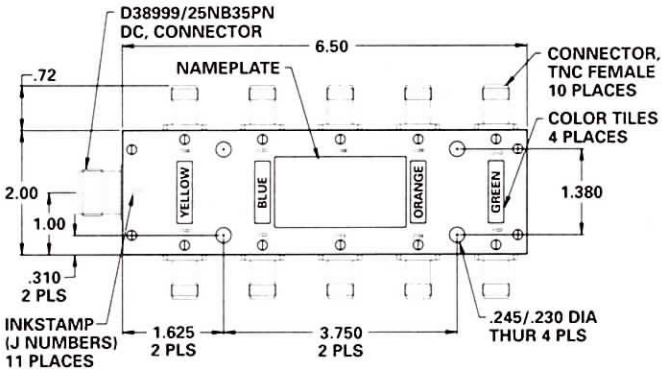

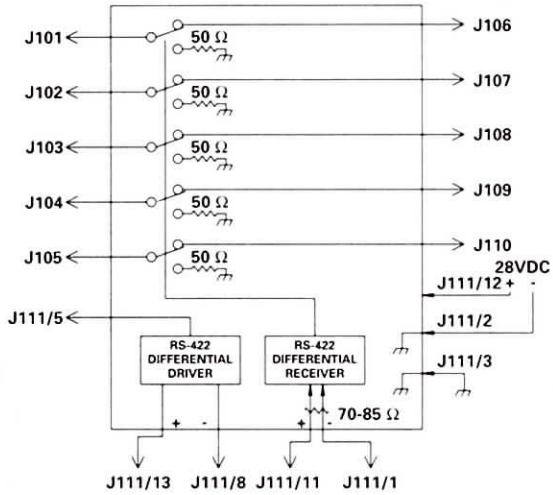

J111 PIN OUTS	
PIN	FUNCTION
1	CONTROL RS-422 RETURN
2	AIRCRAFT GROUND
3	SAFETY GROUND
4	SPARE
5	BLANKING INPUT +5V
6	SPARE
7	SPARE
8	BLANKING OUTPUT RS-422 RETURN
9	SPARE
10	SPARE
11	CONTROL RS-422 POSITIVE
12	+28V
13	BLANKING OUTPUT RS-422 POSITIVE

GUARANTEED PERFORMANCE

Parameter		Min	Typ	Max	Units	Conditions
Operating Frequency		500		2000	MHz	
DC Current			137	250	mA	At +28 VDC Supply per MIL-STD-704A Reverse Polarity Protected
Control Type					mA	Differential Line Receiver
J111/11, J111/1						RS-422/ Stanag-3909 70-85 Ω Termination when open, All Channels are Through
J111/5					mA	1 Line TTL, Input Logic "1" = Output Logic "1" RS-422
Control Current	*High*				µA	
	Low				µA	
Insertion Loss			0.67	1	dB	
Amplitude Tracking			±0.02	±0.1	dB	Channel to Channel
Phase Tracking			±1	±5	DEG	Channel to Channel
Isolation		70	83		dB	
VSWR	*Thru*		1.15/1	1.3/1		All Ports
	Termination		1.13/1	1.5/1		J101 to J105
	Reflective			INF		J106 to J110
Impedance			50		OHMS	
Switching Speed			400	750	nSec	50% TTL to 90% / 10% RF
			±40	±100	nSec	Channel to Channel
Transition (Rise/Fall) Time					µSec	90% / 10% or 10% / 90% RF
Switching (Video) Transients				-100	dBm	.5 - 20 GHz, 13 µSec Repetition Rate
Intercept Points	*2nd*				dBm	
	3rd				dBm	
RF Power	*Operate*	-100		+28	dBm	
	No Damage			+30	dBm	
Weight				1.5	LBS	
Operating Temperature		-54	+25	+110	C	TA

MODEL NUMBER CSWX9023	(4x5) Switch Matrix

FEATURES

- 450-600 MHz
- High Isolation
- TTL Driver
- Terminated Switches
- SMA Connectors

MFA

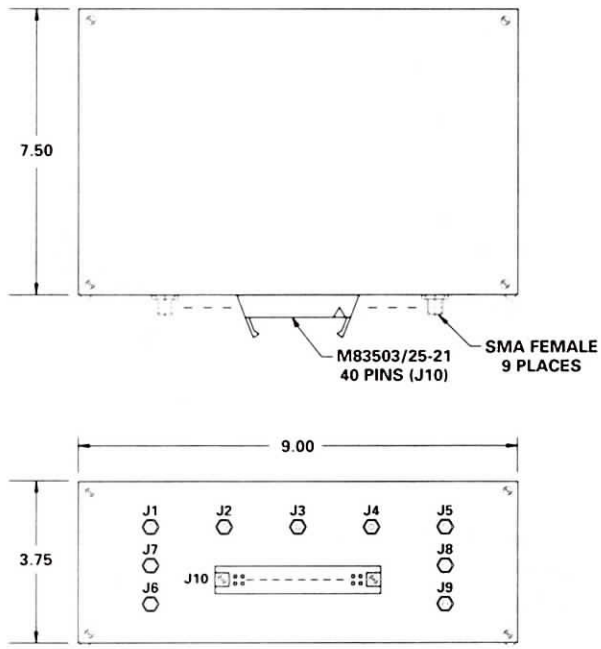

.xx = .02
.xxx = .010

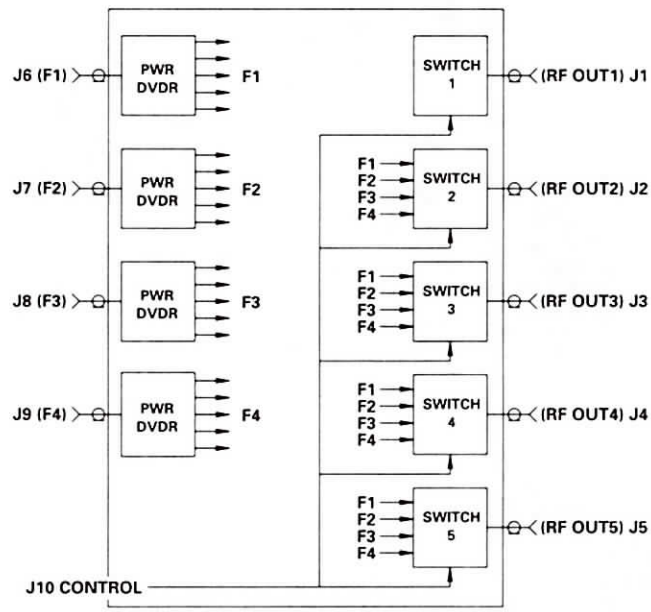

TYPICAL PERFORMANCE
at 25°C

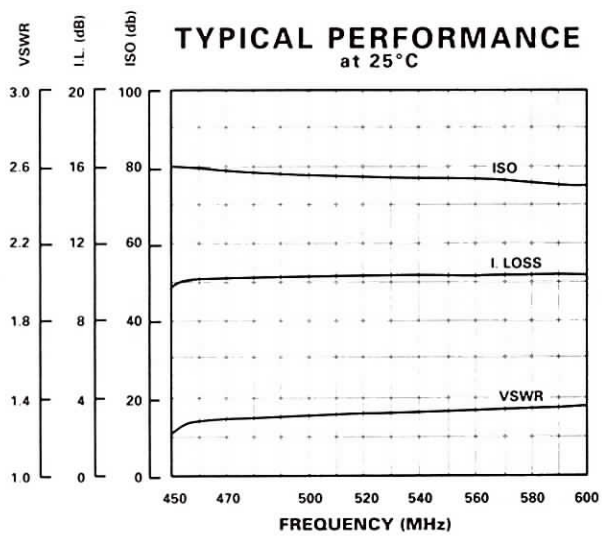

GUARANTEED PERFORMANCE

Parameter		Min	Typ	Max	Units	Conditions
Operating Frequency		450		600	MHz	
DC Current			85	150	mA	At +5 VDC Supply
Control Type			TTL			See Control Table
Control Current	*High*		1	40	µA	VIH = +2.7 V
	Low		.01	-1.6	µA	VIL = +0.5 V
Insertion Loss			10.4	11.5	dB	
Isolation		75	76		dB	Between Selected and Non-Selected Inputs as Measured at the Corresponding Output
VSWR	*Thru*		1.4	2/1		
Impedance			50		OHMS	
Switching Speed			2.4	3	µSec	50% TTL to 10% / 90% RF
Transition (Rise/Fall) Time			18		µSec	10% / 90% to 90% / 10% RF
Switching (Video) Transients			850		mV	
Intercept Poing	*2nd*		+85		dBm	
	3rd		+50		dBm	
RF Power	*No Damage*			+32	dBm	Operate
Operating Temperature		0	+25	+65	°C	TA

MODEL NUMBER 100C1820	(3x3) Switch Matrix

FEATURES

- 20-2000 MHz
- +56 dB 3rd Order Intercept Point
- Small 3x2x2 Package
- Connects Any Receiver to Any Antenna
- SMA Connectors
- All Receivers Can Share a Common Antenna Via Integrated Power Combiners

MFA

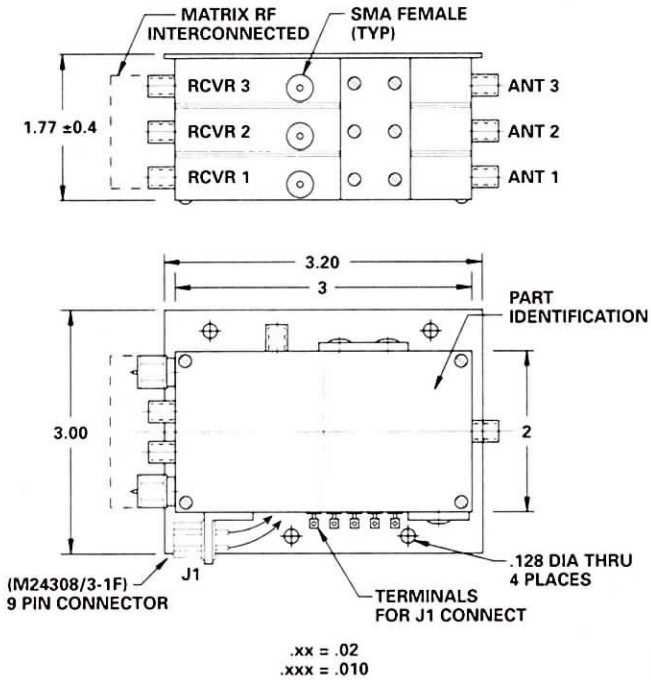

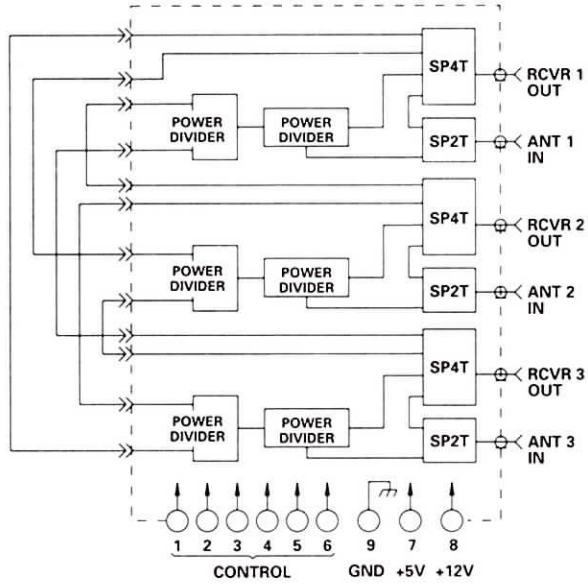

TYPICAL PERFORMANCE
at 25°C

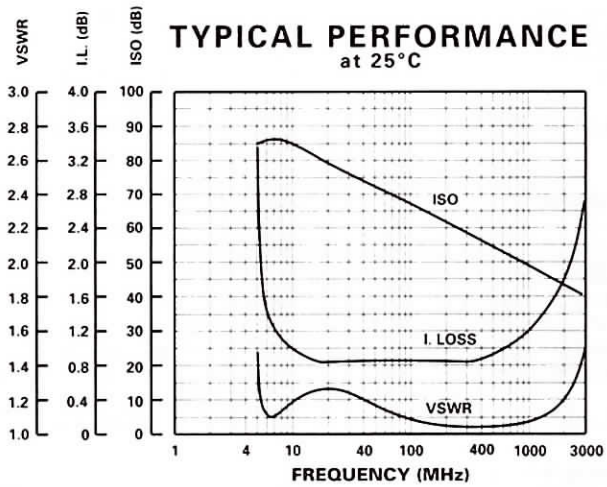

GUARANTEED PERFORMANCE

Parameter		Min	Typ	Max	Units	Conditions
Operating Frequency		20		2000	MHz	
DC Current			112	160	mA	At +5 VDC Supply
			52	75	mA	At +12 VDC Supply
Control Type			TTL			6 Line Control
Control Current	*High*		0	±20	µA	VIH = +2.7 V
	Low		0	±20	µA	VIL = +0.5 V
Insertion Loss					dB	See RF Parameters Performance Chart
Isolation					dB	See RF Parameters Performance Chart
VSWR						See RF Parameters Performance Chart
Impedance			50		OHMS	
Switching Speed			1.5	5	µSec	50% TTL to 90% / 10% RF
Transition (Rise/Fall) Time			0.7		µSec	90% / 10% to 10% / 90% RF
Switching (Video) Transients			1.8		V	
Intercept Points	*2nd*		+72		dBm	
	3rd	+36	+51		dBm	20 - 100 MHz
		+40	+56		dBm	100 - 1000 MHz
		+36	+50		dBm	1000 - 2000 MHz
RF Power	*Operate*		+24	+20	dBm	0.1 dB Compression
	No Damage			+24	dBm	
Operating Temperature		0	+25	+70	°C	TA

MODEL NUMBER 100C1739	(2x6) Switch Matrix

FEATURES

- 27-33 MHz
- 1.0 dB Insertion Loss
- 93 dB Isolation
- 25 mV Transients
- Blocking Matrix

MFA

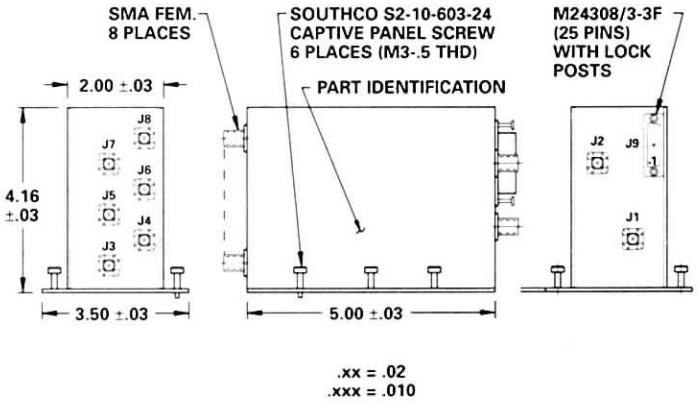

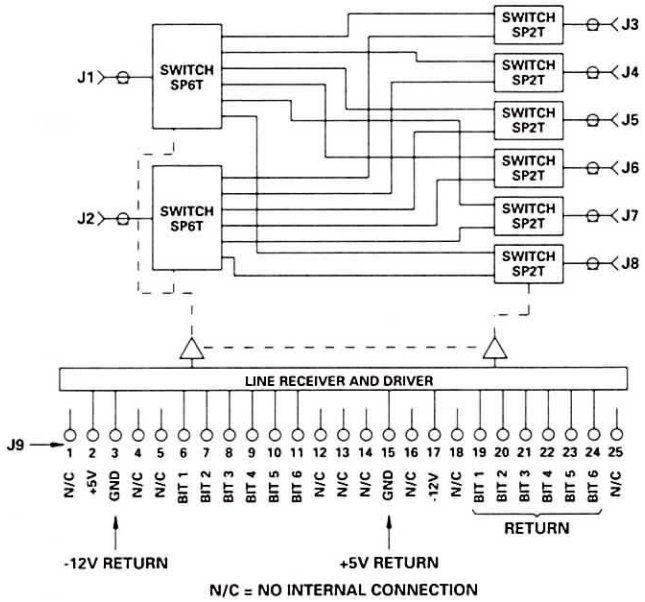

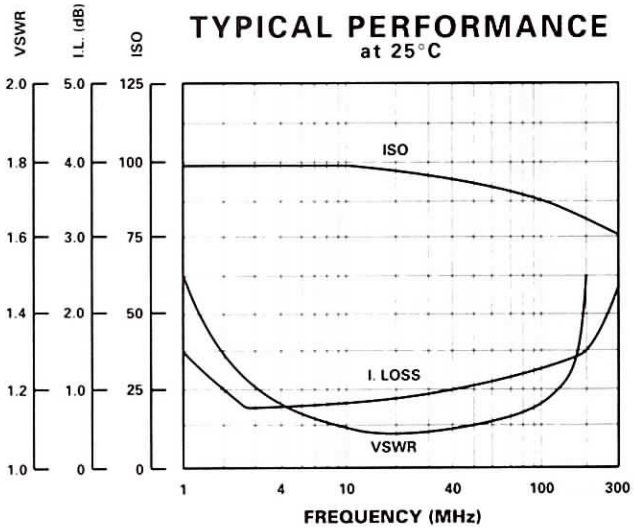

GUARANTEED PERFORMANCE

Parameter	Min	Typ	Max	Units	Conditions
Operating Frequency	27		33	MHz	
DC Current		130	200	mA	At +5 VDC Supply
		14	25	mA	To -12 VDC Supply
Control Type		RS-422-A			6 Line Differential Line Receiver See Truth Table
Insertion Loss		1.0	2.2	dB	
Isolation	80	93		dB	Between the 6 Outputs J3-J8
VSWR		1.1/1	1.3/1		
Impedance		50		OHMS	
Switching Speed		2.3	4	µSec	50% CTL – 10% / 90% RF
Transition (Rise/Fall) Time		1.0		µSec	10% / 90% to 90% / 10% RF
Switching (Video) Transients		25	60	mV	Peak to Peak
Intercept Points *2nd*		+70		dBm	70 MHz / 50 MHz
3rd		+46		dBm	35 MHz / 50 MHz
RF Power *Operate*		+21	+10	dBm	0.1 dB Compression
No Damage			+15	dBm	
Operating Temperature	0	+25	+70	°C	TA

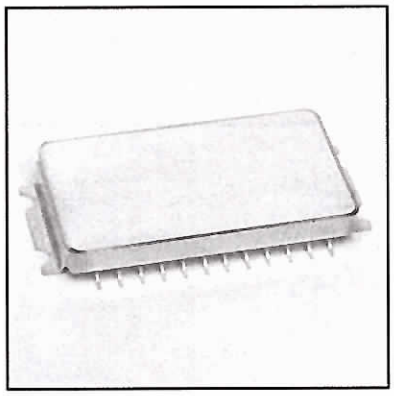

MODEL NUMBER DSWX5034

(4x2) GaAs Switch Matrix

FEATURES

- 40-70 MHz
- High Isolation
- 2 mA, +5 VDC
- Small Surface Mount Package

MFA

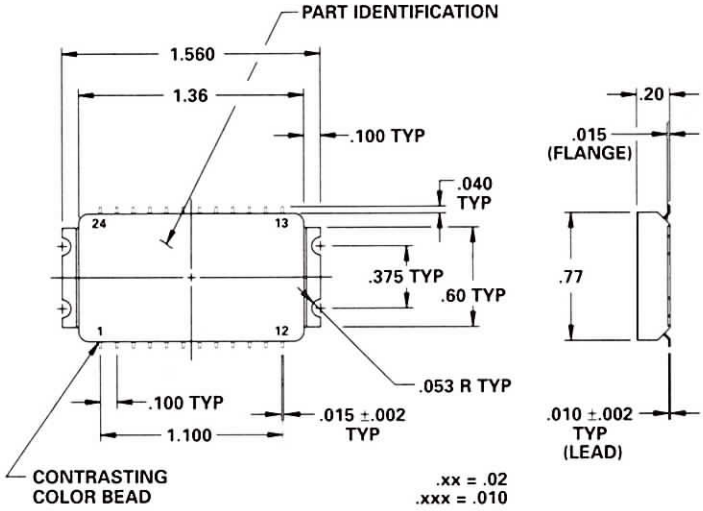

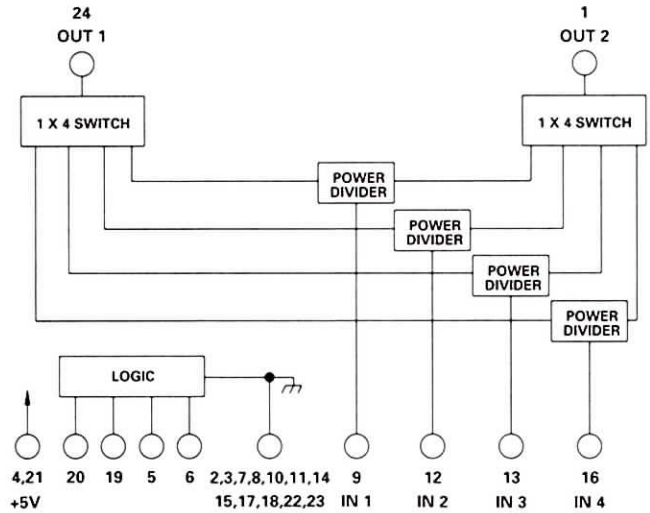

LOGIC TABLE

Logic Pin No.		Connection To Pin 24	Logic Pin No.		Connection To Pin 1
20	19		5	6	
0	0	Pin 9	0	0	Pin 9
0	1	Pin 12	0	1	Pin 12
1	0	Pin 13	1	0	Pin 13
1	0	Pin 16	1	0	Pin 16

GUARANTEED PERFORMANCE

Parameter		Min	Typ	Max	Units	Conditions
Operating Frequency		40		70	MHz	
DC Current				2	mA	At +5 VDC Supply
Control Type			TTL			4 Line See Logic Table
Control Current	*High*		1	±10	µA	VIH = +3.0V
	Low		1	±10	µA	VIL = +0.5V
Insertion Loss				9.5	dB	
Isolation		65			dB	
VSWR				1.5/1 1.5/1		
Impedance			50		OHMS	
Switching Speed				100	nSec	50% TTL to 10% / 90% RF
Transition (Rise/Fall) Time					nSec	90% / 10% or 10% / 90% RF
Switching (Video) Transients					mV	
Intercept Points	*2nd*				dBm	
	3rd				dBm	
RF Power	*Operate*		+10		dBm	0.1 dB Compression
	No Damage		+20		dBm	
Operating Temperature		-32	+25	+85	°C	TA

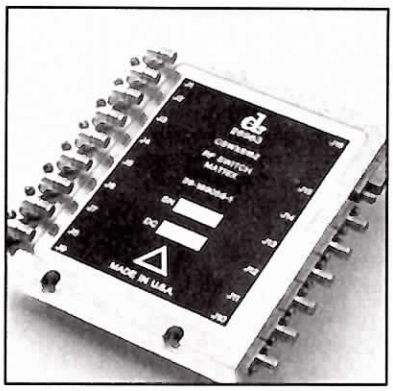

MODEL NUMBER CSWX6152

PIN Diode RF Switch Matrix

FEATURES

- 20-1000 MHz
- +90 dBm 2nd Order Intercept Point
- +50 dBm 3rd Order Intercept Point
- High Isolation
- TTL Drivers
- Replaceable SMA Connectors

MFA

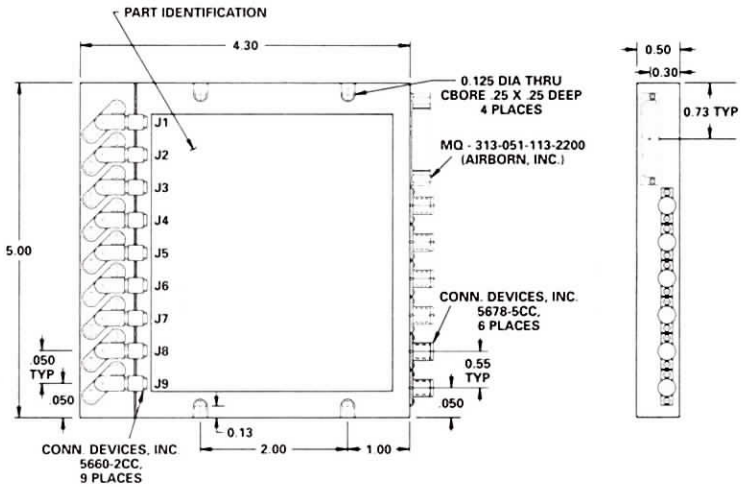

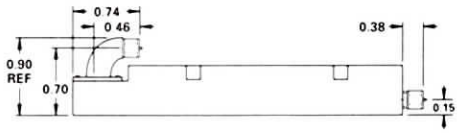

BLOCK DIAGRAM

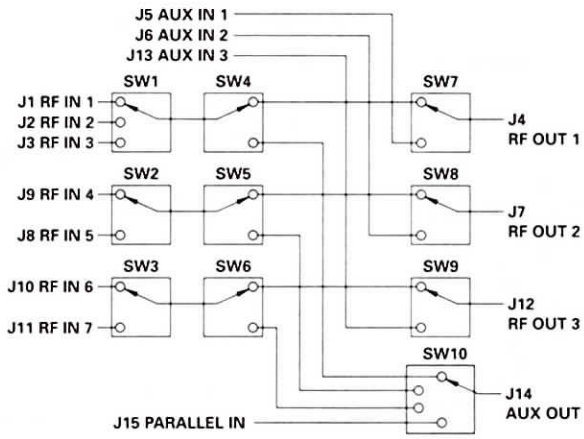

TYPICAL PERFORMANCE
at 25°C

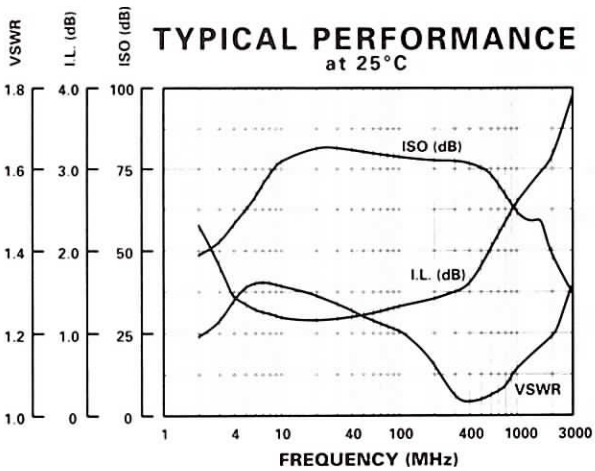

GUARANTEED PERFORMANCE

Parameter		Min	Typ	Max	Units	Conditions
Operating Frequency		20		1000	MHz	
DC Current			95	600	mA	At +5 VDC Supply
			275	300	mA	At -5 VDC Supply
Control Type			CMOS			6 Line Control
Control Current	*High*				µA	VIH = +5V
	Low				µA	VIL = +0V
Insertion Loss			2.5	3.5	dB	RF IN to RF OUT Path
			1.0	1.3	dB	AUX IN to RF OUT Path
			2.3	3.5	dB	RF IN to AUX OUT
			1.0	1.3	dB	PARALLEL IN to AUX OUT
Isolation: *RF IN to RF OUT Path*		50	55		dB	On - Off Isolation (Except RF IN1 and RF IN4)
		60	80		dB	Channel to Channel Isolation
		100	105		dB	On - Off Isolation (For RF IN1 and RF IN4)
	AUX IN to RF OUT Path	35	50		dB	On - Off Isolation
	RF IN to AUX OUT	30	53		dB	On - Off Isolation
	PARALLEL IN to AUX OUT	30	45		dB	On - Off Isolation
VSWR	*Thru*		1.25/1	1.5/1		
	Termination		1.25/1	1.5/1		RF IN and AUX IN Only
Impedance			50		OHMS	
Switching Speed			2.5	5	µSec	50% TTL to 90% / 10% RF
Transition (Rise/Fall) Time			1.0		nSec	10% / 90% to 90% / 10% RF
Switching (Video) Transients			1.7		mV	Peak Value
Intercept Points	*2nd*	+60	+90		dBm	70 MHz / 50 MHz
	3rd	+35	+50		dBm	35 MHz / 50 MHz
RF Power	*Operate*		+37	+20	dBm	1.0 dB Compression
	No Damage				dBm	
Operating Temperature		-20	+25	+85	°C	TA

MODEL NUMBER CSWM9125

(4x12) Switch Matrix

The RF Switch Matrix is a device with 12 RF Inputs & 4 RF Outputs such that any output can be connected to any single input. The input frequency range of the unit is from 0.8 GHz to 4.2 GHz instantaneous bandwidth maintaining isolations of 60dB channel-to-channel while keeping the insertion loss lower than 5dB. Control is performed with discrete single ended TTL inputs. The package is intended to blind mate into a card cage of the standard 19 inch mount chassis. The environment is an inhabited airborne platform.

MFA

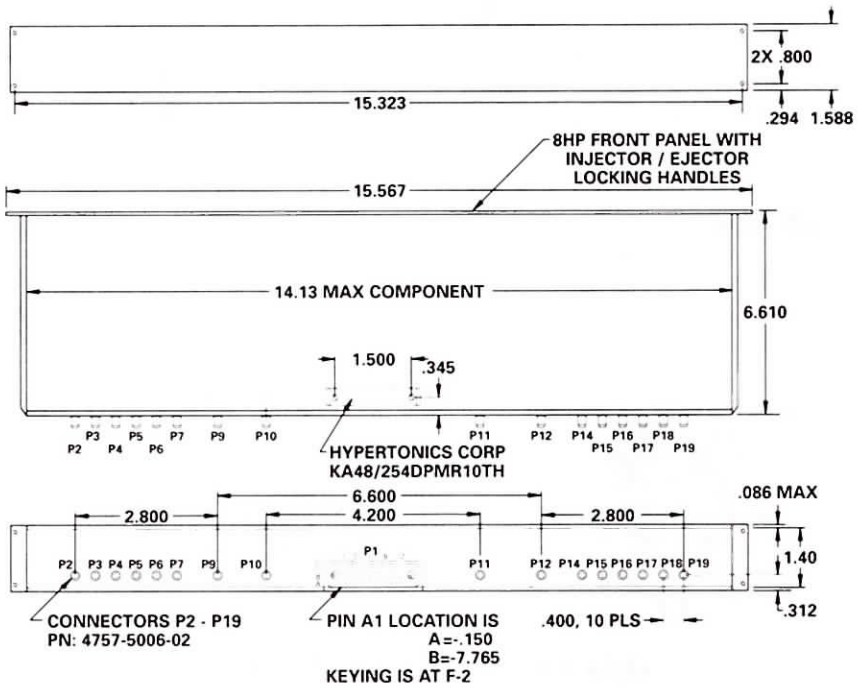

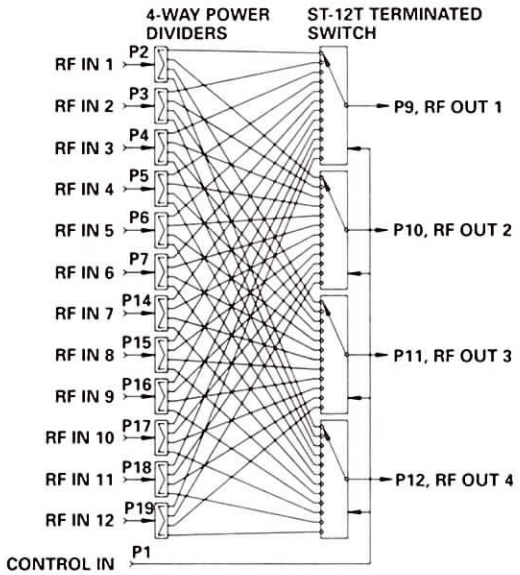

DC CONNECTOR	FUNCTION
P1-A2	OUT1 CTL1
P1-A3	OUT1 CTL2
P1-A4	OUT1 CTL3
P1-A5	OUT1 CTL4
P1-B2	OUT2 CTL1
P1-B3	OUT2 CTL2
P1-B4	OUT2 CTL3
P1-B5	OUT2 CTL4
P1-C2	OUT3 CTL1
P1-C3	OUT3 CTL2
P1-C4	OUT3 CTL3
P1-C5	OUT3 CTL4
P1-D2	OUT4 CTL1
P1-D3	OUT4 CTL2
P1-D4	OUT4 CTL3
P1-D5	OUT4 CTL4
P1-C9	+15V
P1-C10	+15V
P1-D9	+15V RTN
P1-D10	+15V RTN
ALL OTHER PINS ARE SPARES (N/C)	

RF CONNECTOR	FUNCTION
P2	RF IN 1
P3	RF IN 2
P4	RF IN 3
P5	RF IN 4
P6	RF IN 5
P7	RF IN 6
P9	RF OUT 1
P10	RF OUT 2
P11	RF OUT 3
P12	RF OUT 4
P14	RF IN 7
P15	RF IN 8
P16	RF IN 9
P17	RF IN 10
P18	RF IN 11
P19	RF IN 12

LOGIC TABLE

MSB OUTX_CTL4	OUTX_CTL3	OUTX_CTL2	LSB OUTX_CTL1	STATE, WHERE X=1,2,3 AND 4
0	0	0	0	OUTPUT X IS ISOLATED FROM ALL INPUTS
0	0	0	1	OUTPUT X IS CONNECTED TO INPUT 1
0	0	1	0	OUTPUT X IS CONNECTED TO INPUT 2
0	0	1	1	OUTPUT X IS CONNECTED TO INPUT 3
0	1	0	0	OUTPUT X IS CONNECTED TO INPUT 4
0	1	0	1	OUTPUT X IS CONNECTED TO INPUT 5
0	1	1	0	OUTPUT X IS CONNECTED TO INPUT 6
0	1	1	1	OUTPUT X IS CONNECTED TO INPUT 7
1	0	0	0	OUTPUT X IS CONNECTED TO INPUT 8
1	0	0	1	OUTPUT X IS CONNECTED TO INPUT 9
1	0	1	0	OUTPUT X IS CONNECTED TO INPUT 10
1	0	1	1	OUTPUT X IS CONNECTED TO INPUT 11
1	1	0	0	OUTPUT X IS CONNECTED TO INPUT 12
1	1	0	1	NOT USED
1	1	1	0	NOT USED
1	1	1	1	NOT USED

MODEL NUMBER CSA09034

SP4T Switch Assembly

FEATURES

- 1-1200 MHz
- High Intercept Points
- 80 dB Isolation
- 1.0 dB Insertion Loss
- Amplitude and Phase Balanced
- 2 Line TTL Control
- Four Integrated SP4T Switches

MFA

LOGIC TABLE				
Strobe	SW-02	SW-01	Function	Switch
0	0	0	J5 To J1	S1 - S4
0	0	1	J5 To J2	S1 - S4
0	1	0	J5 To J3	S1 - S4
0	1	1	J5 To J4	S1 - S4
1	X	X	Last State When Strobe was at a Low Level	S1, S2, S3, S4 as Required See J6 Chart

X = Don't Care

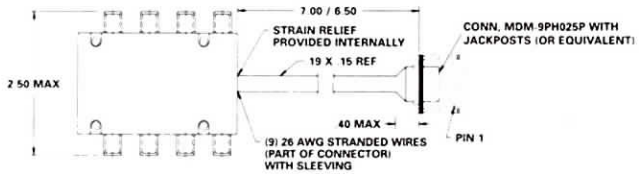

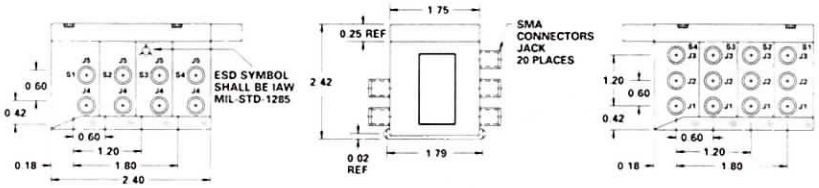

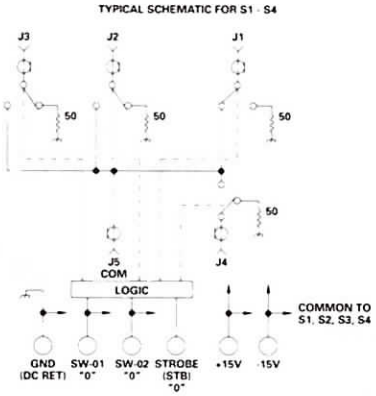

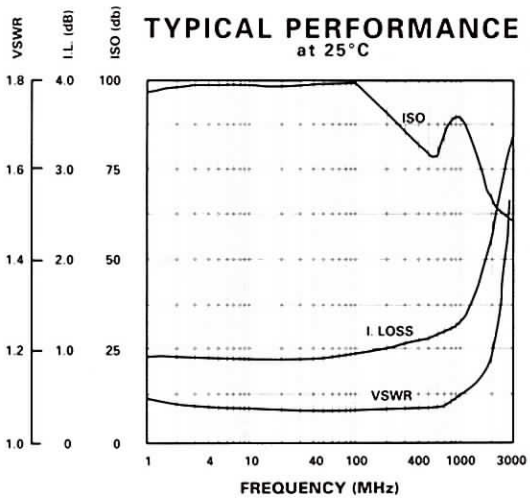

GUARANTEED PERFORMANCE

Parameter		Min	Typ	Max	Units	Conditions
Operating Frequency		1		1200	MHz	
DC Current				170	mA	At +5 VDC Supply
				210	mA	To -15 VDC Supply
Control Type			TTL			See Logic Table
Control Current	*High*				µA	VIH = +2.7 V
	Low				µA	VIL = +0.5 V
Insertion Loss			1.1	1.5	dB	1 - 100 MHz
			1.6	2.0	dB	100 - 1200 MHz
	Amp Balance		0.1	±0.3	dB	Port to Port, Ref J4
	Phase Balance		0.25	±1.0	DEG	1 - 20 MHz
	(Port to Port, Ref J41)		0.35	±2.0	DEG	20 - 1200 MHz
Isolation		70	80		dB	
VSWR	*Thru*		1.2/1	1.25/1		
	Termination		1.25/1	1.5/1		
Impedance			50		OHMS	
Switching Speed			9.0	10	µSec	50% TTL to 90% / 10% RF
Transition (Rise/Fall) Time			1.0		µSec	10% / 90% to 90% / 10% RF
Switching (Video) Transients				-70	dBm	
Intercept Points	*2nd*	+70	+75		dBm	1 - 20 MHz
		+80	+100		dBm	20 - 1200 MHz
	3rd	+35	+38		dBm	1 - 20 MHz
		+40	+60		dBm	20 - 1200 MHz
RF Power	*Operate*		+14	+12	dBm	1 - 2 MHz (0.1 dB Comp.)
			+17	+15	dBm	2 - 20 MHz (0.1 dB Comp.)
			+30	+20	dBm	20 - 1200 MHz (0.1 dB Comp.)
	No damage			+30	dBm	
Operating Temperature		0	+25	+75	°C	TA

MODEL NUMBER DSWM9040	PIN Diode Switch SP40T

FEATURES

- 350-450 MHz
- 1.7 dB Insertion Loss
- 55 dB Isolation
- 6 Line Encoded TTL Control
- Constant Phase
- Bite Circuitry
- SMA Connectors

MFA

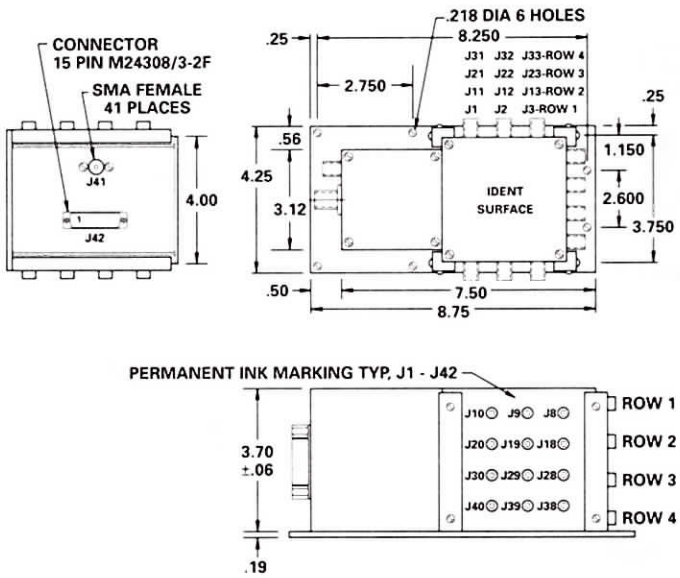

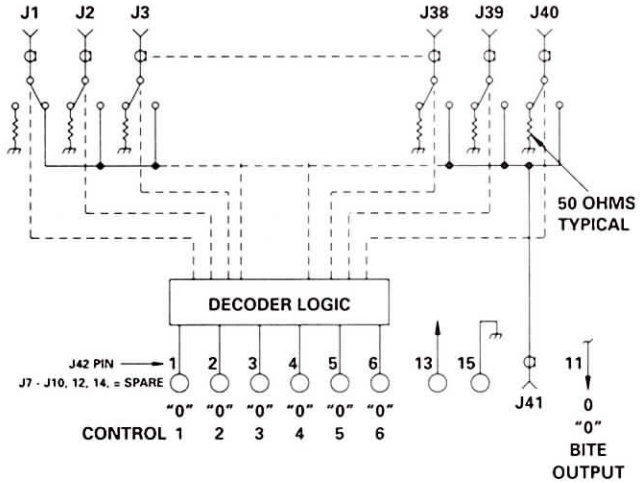

TYPICAL PERFORMANCE
at 25°C

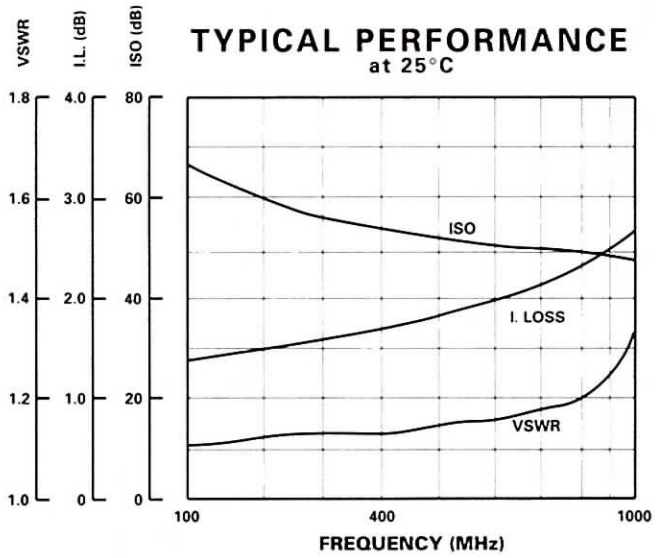

GUARANTEED PERFORMANCE

Parameter		Min	Typ	Max	Units	Conditions
Operating Frequency		350		450	MHz	
DC Current				120	mA	At +5 VDC Supply
Control Type			TTL			6 Line, See Control Table
Bite Circuitry			TTL			Logic "1" = Failure Output goes high within 1.5 µSec of Failure
Control Current	*High*		1	±10	µA	VIH = +2.7 V
	Low		1	±10	µA	VIL = +0.5 V
Insertion Loss			1.7	3.0	dB	
Insertion Loss Flatness				±0.5	dB	
Insertion Loss Stability				0.3	dB	Over Temperature
Insertion Loss Matching				±0.3	dB	370 - 450 MHz
				±0.5	dB	350 - 370 MHz
Insertion Phase Ripple				±2.0	DEG	From Linear
Insertion Phase Stability				±2.0	DEG	Over Temperature
Insertion Phase Matching				±0.5	DEG	370 - 450 MHz
				±1.0	DEG	350 - 370 MHz
Isolation		45	55		dB	Between Outputs
VSWR	*Thru*		1.15	1.3/1		
	Termination			1.3/1		
Impedance			50		OHMS	
Switching Speed			4	5	µSec	50% TTL to 10% / 90% RF
Transition (Rise/Fall) Time			1.5		µSec	10% / 90% to 90% / 10% RF
RF Power	*Operate*				dBm	0.1 dB Compression
	No Damage			+20	dBm	
Operating Temperature		-15	+25	+70	°C	TA

MODEL NUMBER DSWM9073

Switch Assembly, RF 8 Channel

FEATURES

- 1-1200 MHz
- 2 dB Insertion Loss
- +80 dBm IP_2
- Amplitude/Phase Balanced

MFA

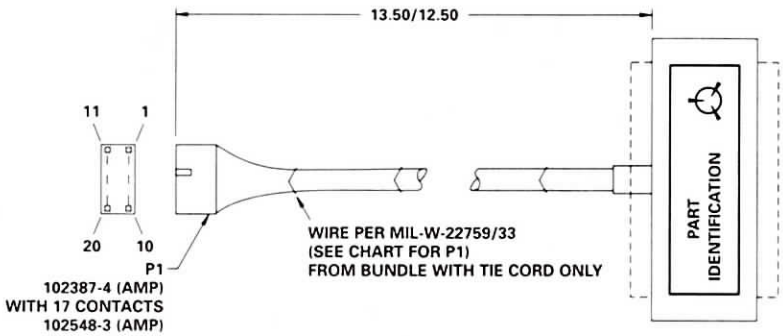

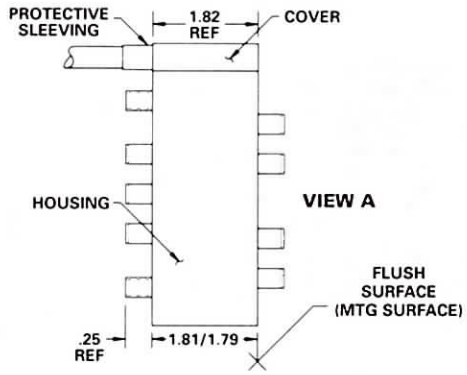

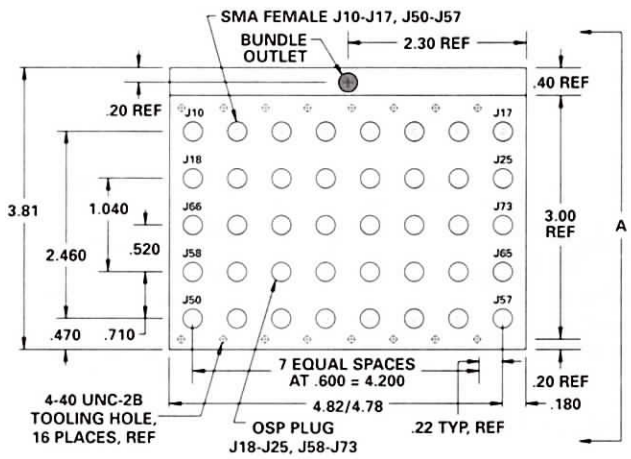

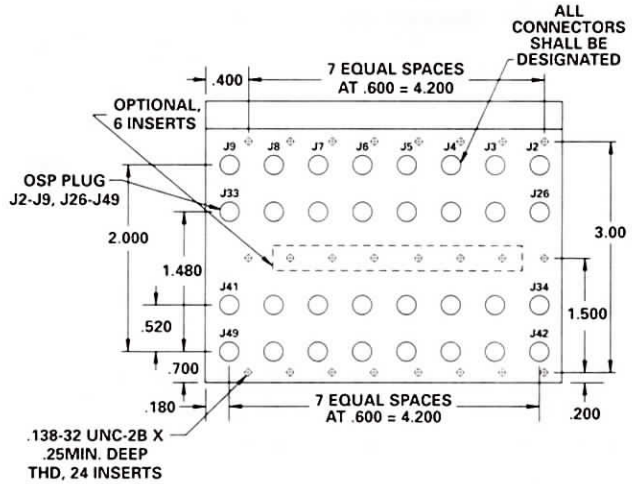

PORT SELECT					
Switch State			Port		
S1 (J66 to J73)	S2	S3	2^2	2^1	2^0
J58 to J65	J10 to J17	J18 to J25	0	0	0
S3	J10 to J17	S1	0	0	1
J58 to J65	J2 to J9	J18 to J25	0	1	0
S3	J2 to J9	S1	0	1	1
J50 to J57	Not Sel.	Not Sel.	1	0	0
J26 to J33	Not Sel.	Not Sel.	1	0	1
J34 to J41	Not Sel.	Not Sel.	1	1	0
J42 to J49	Not Sel.	Not Sel.	1	1	1

PI CHART		
Pin No.	Function	Wire Type
1	Strobe 1	30 Awg. Blk
2	Strobe 2	30 Awg. Brn
3	Strobe 3	30 Awg. Red
4	Strobe 4	30 Awg. Orn
5	Strobe 5	30 Awg. Yel
6	Strobe 6	30 Awg. Grn
7	Strobe 7	30 Awg. Blu
8	Strobe 8	30 Awg. Vio
9	Port 2^3	30 Awg. Gry
10	Port 2^1	30 Awg. Wht
11	Port 2^2	30 Awg. Wht/Blk
12	N/C	
13	N/C	
14	N/C	
15	+5V	26 Awg. Red
16	+5V	26 Awg. Wht/Red
17	-15V	26 Awg. Orn
18	+5V RET	26 Awg. Blk
19	+5V RET	26 Awg. Blk
20	-15V RET	26 Awg. Blk

MODEL NUMBER DSWM6309

Switch Network

FEATURES

- Broad Band, 1-2000 MHz
- Modular Design
- Phase Tracking, ±2 Degrees
- Hermetic Aluminum Case

MFA

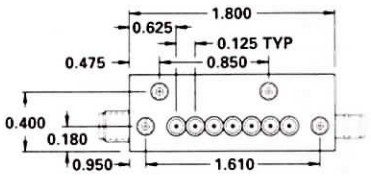

PORT SELECT					
Switch State			Port		
S1 (J66 to J73)	S2	S3	2^2	2^1	2^0
J58 to J65	J10 to J17	J18 to J25	0	0	0
S3	J10 to J17	S1	0	0	1
J58 to J65	J2 to J9	J18 to J25	0	1	0
S3	J2 to J9	S1	0	1	1
J50 to J57	Not Sel.	Not Sel.	1	0	0
J26 to J33	Not Sel.	Not Sel.	1	0	1
J34 to J41	Not Sel.	Not Sel.	1	1	0
J42 to J49	Not Sel.	Not Sel.	1	1	1

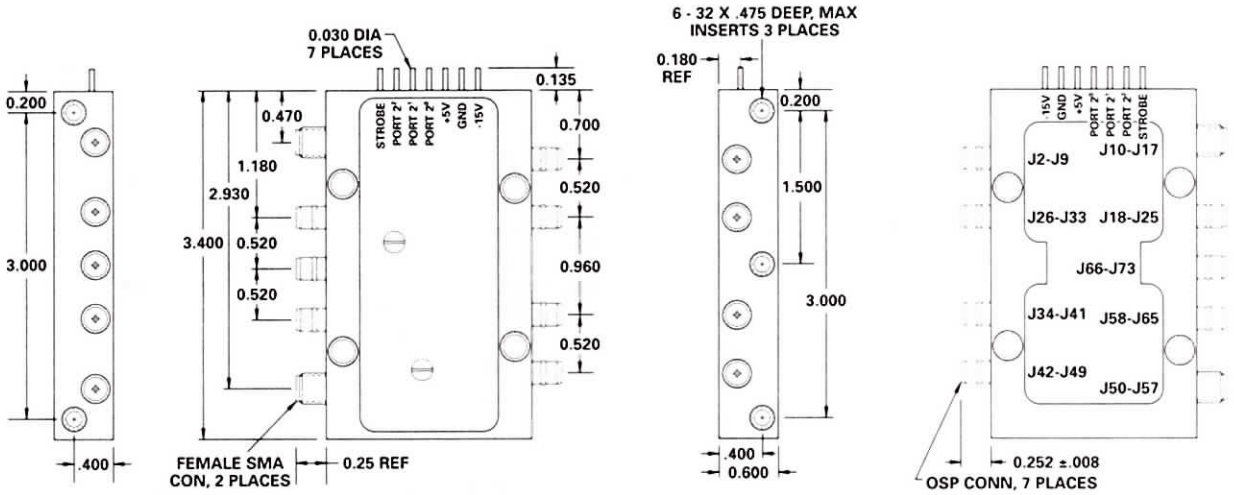

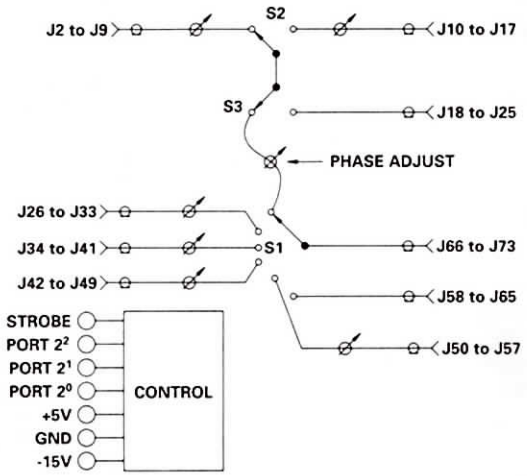

GUARANTEED PERFORMANCE

Parameter		Min	Typ	Max	Units	Conditions
Operating Frequency		1		1200	MHz	J26 to J57,
		250		2000	MHz	J66 to J73, J2 to J25
DC Current				50	mA	At +5 VDC Supply
				37	mA	At -15 VDC Supply
Control Type			TTL			See Logic Table
Control Current	*High*			±10	µA	VIH = +2.7 V
	Low			±10	µA	VIL = +0.5 V
Isolation		50	55		dB	Any Port to Port
Insertion Loss			1.0	1.5	dB	1 - 20 MHz, S1
			1.5	2.0	dB	20 - 1200 MHz, S1
			1.5	2.0	dB	1200 - 2000 MHz, S2 and S3
			2.0	2.5	dB	250 - 1200 MHz, S2 and S3
VSWR				1.5/1		
Intercept Points	*2nd*	75	80		dBm	
	3rd	45	49		dBm	
Amplitude Balance			±0.1	±0.3	dB	
Phase Balance				±1	DEG	1 - 20 MHz, S1
				±2	DEG	20 - 2000 MHz, S1, S2 and S3
P1dB Compression			+21	+15	dBm	1 - 20 MHz
			+30	+20	dBm	20 - 2000 MHz
	No Damage			+30	dBm	
Operating Temperature		0	+25	+70	°C	TA

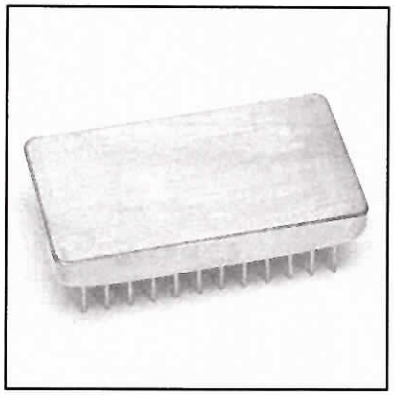

MODEL NUMBER CSWX1923

PIN Diode SP2T & SP6T

FEATURES

- 30-600 MHz
- SP2T & SP6T in a 24 Pin DIP
- CMOS Control
- Low Current Consumption

MFA

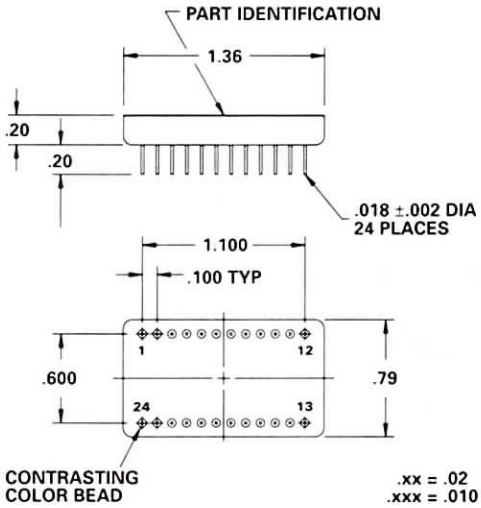

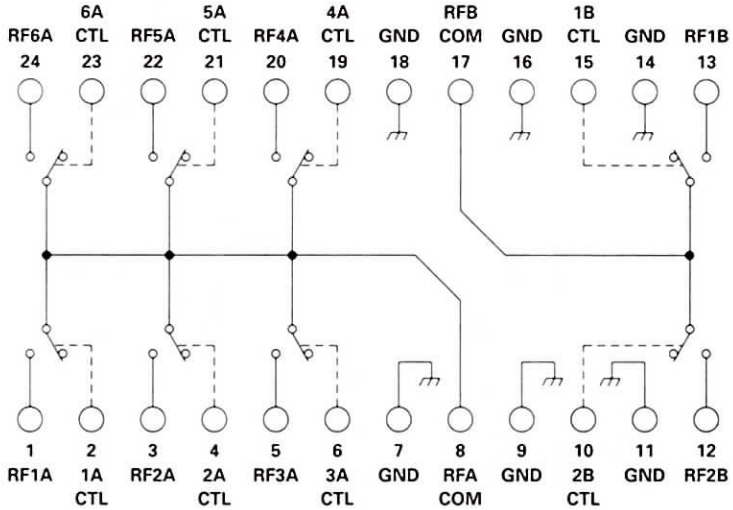

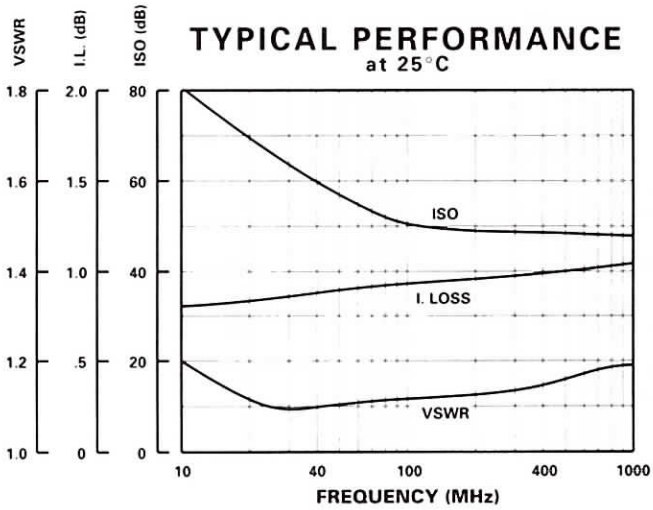

GUARANTEED PERFORMANCE

Parameter		Min	Typ	Max	Units	Conditions
Operating Frequency		30		600	MHz	
Control Type			CMOS			8 Line - One to Each Switch; Compatible With MC88C29 Driver Logic: +12V = Thru +0V = Isolation
Control Current	*High*		4	10	mA	VIH = +12V
	Low		0	0	mA	VIL = +0V
Insertion Loss			1.1	1.7	dB	
Isolation		37	47		dB	
VSWR	*Thru*		1.2/1	1.6/1		
Impedance			50		OHMS	
Switching Speed			62	100	µSec	50% TTL to 10% / 90% RF
Transition (Rise/Fall) Time			34		µSec	10% / 90% or 90% / 10% RF
Switching (Video) Transients			140		mV	Peak Value
Intercept Points	*2nd*		+73		dBm	70 MHz / 50 MHz
	3rd		+52		dBm	35 MHz / 50 MHz
RF Power	*Operate*		+21	+10	dBm	0.1 dB Compression
	No Damage			+20	dBm	
Operating Temperature		-55	+25	+85	°C	TA

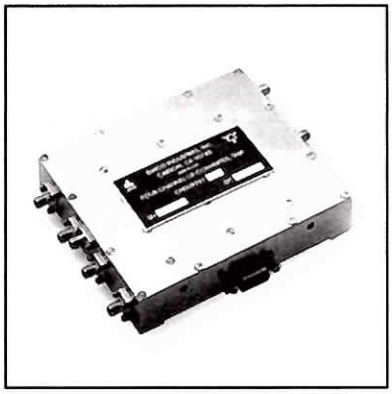

MODEL NUMBER CHD09297

4 Channel Up-Converter

UNIT DESCRIPTION

The input to the unit is a wideband AM and PM modulated IF carrier in the VHF band. The IF signal is power divided into Four (4) channels and up-converted to separate UHF bands. Any combination of the four bands can be selected and combined in one primary RF output. The output level is controlled by a four-bit digital attenuator with 45dB range. The unit has a second, selectable RF output to monitor the primary RF output.

MFA

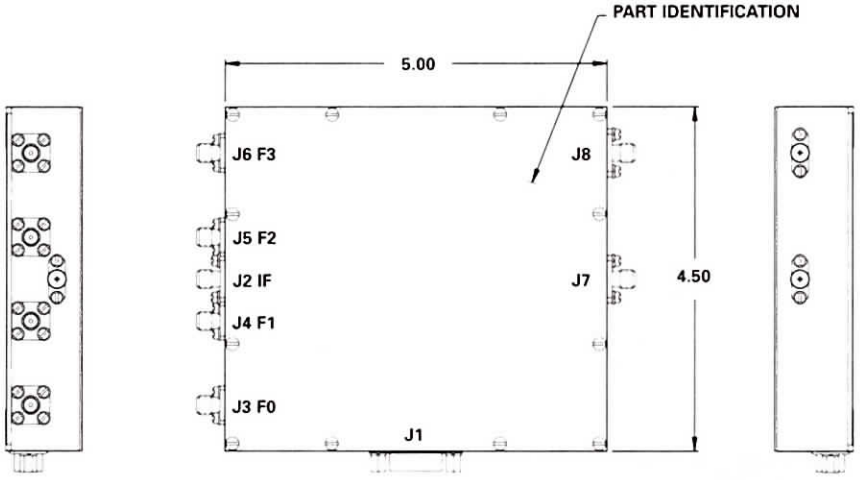

J1 PIN DESIGNATIONS	
NOMENCLATURE	PIN NO.
BD_0	J1-1
BD_1	J1-2
BD_2	J1-3
BD_3	J1-4
ATT_0 (3 DB)	J1-5
ATT_1 (6 DB)	J1-6
ATT_2 (12 DB)	J1-7
ATT_3 (24 DB)	J1-8
RF SAMPLE SELECT	J1-9
+15VDC	J1-10
GND	J1-11
-15VDC	J1-12
GND	J1-13
+5 VDC	J1-14
-5.2 VDC	J1-15

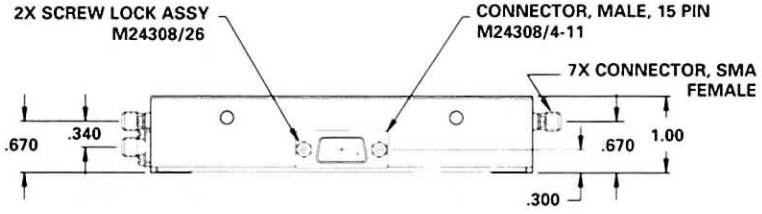

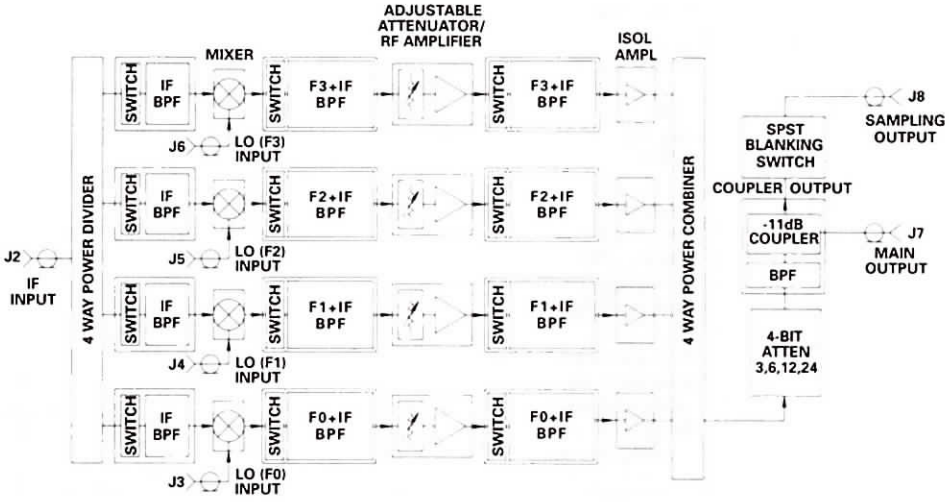

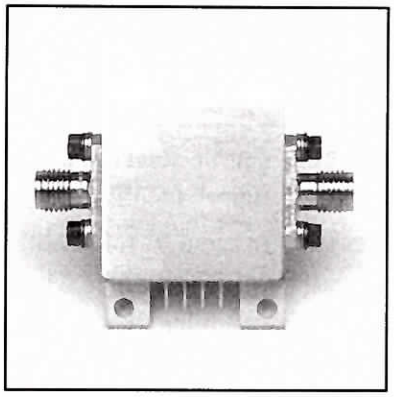

MODEL NUMBER DHD06179

Switch-Amplifier

FEATURES

- 1500-2000 MHz
- 75 dB Isolation
- 15 mV Transients
- 10 dB Gain

MFA

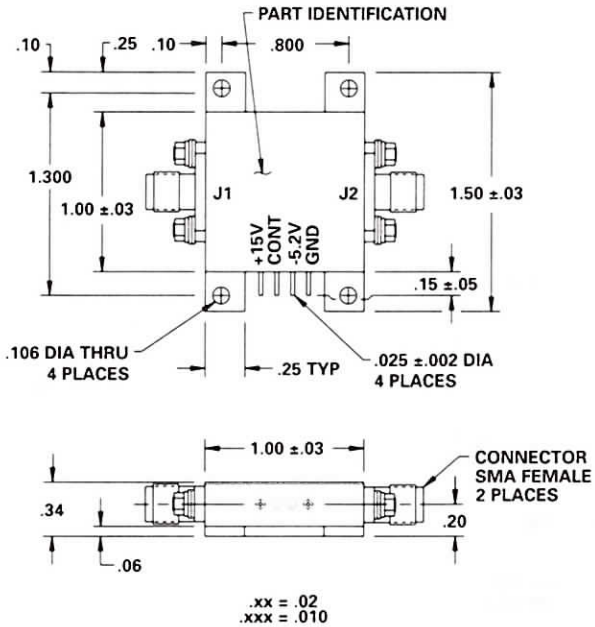

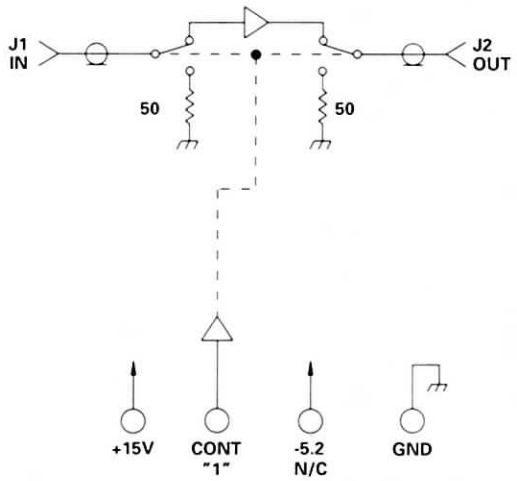

N/C = NO INTERNAL CONNECTION

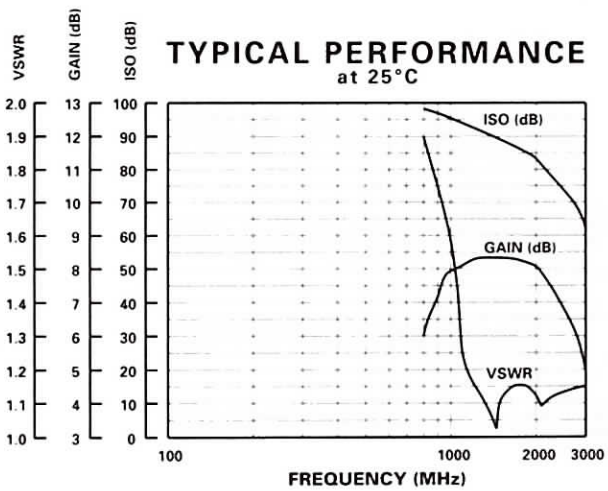

GUARANTEED PERFORMANCE

Parameter		Min	Typ	Max	Units	Conditions
Operating Frequency		1500		2000	MHz	
DC Current			145	200	mA	At +15 VDC Supply
					mA	At -5.2 VDC Supply
Control Type			TTL			1 Line
						Logic "1" = Thru
Control Current	*High*		-110	80	µA	VIH = +2.7 V
	Low		-230	-400	µA	VIL = +0.5 V
Gain		6	8	10	dB	
Isolation		75	83		dB	1500 - 2000 MHz
VSWR	*Thru*		1.25/1	2/1		
	Termination		1.06/1	2/1		
Impedance			50		OHMS	
Switching Speed			23	35	nSec	50% TTL to 90% / 10% RF
Transition (Rise/Fall) Time			3	20	nSec	10% / 90% or 90% / 10% RF
Switching (Video) Transients			15		mV	Peak Value
Intercept Points	*2nd*		+52		dBm	800 / 700 MHz
	3rd	+35	+39		dBm	1100 / 700 MHz
RF Output Power at 1 dB Gain Compression		+15	+20		dBm	1 dB Compression
Terminated Power				+10	dBm	
RF Input Power				+2	dBm	
Operating Temperature		-55	+25	+85	°C	TA
				+125	°C	Gain Spec May Vary

MODEL NUMBER CDS0892	Connectorized SP2T w/Amplifier

FEATURES

- 1550-1850 MHz
- 4 dB Gain
- Non-Reflective
- TTL Driver
- Replaceable SMA Connectors

MFA

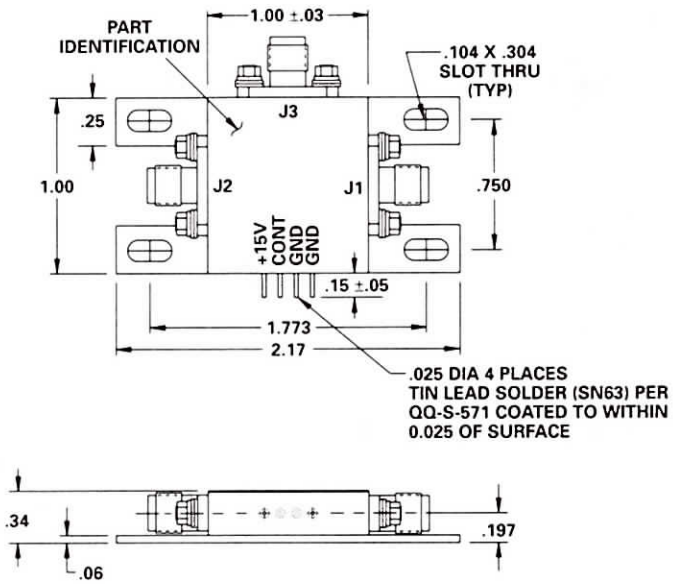

.xx = .02
.xxx = .010

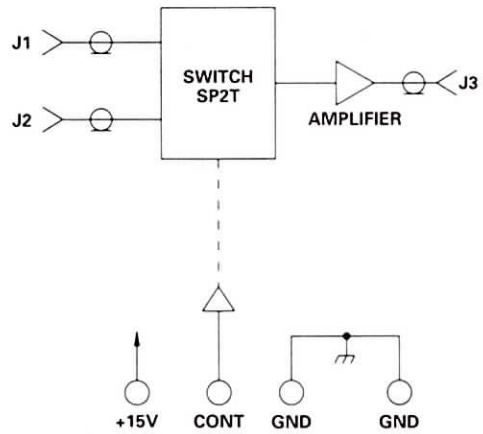

TYPICAL PERFORMANCE
at 25°C

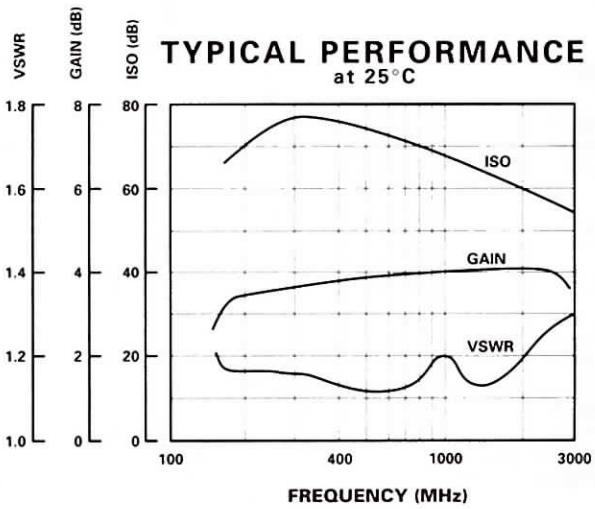

GUARANTEED PERFORMANCE

Parameter		Min	Typ	Max	Units	Conditions
Operating Frequency		1550		1850	MHz	
DC Current			71	100	mA	At +15 VDC Supply
Control Type			TTL			1 Line Logic "0" = J2 - J3 Logic "1" = J1 - J3
Control Current	*High*		0	60	µA	VIH = +2.7 V
	Low		-0.5	-1.6	mA	VIL = +0.5 V
Insertion Gain		3	4	5	dB	
	Flatness		±0.1	±0.5	dB	
	Noise Figure		8.2	10	dB	
Isolation		45	59		dB	
VSWR	*Thru*		1.17/1	1.5/1		
	Termination		1.12/1	1.5/1		
Impedance			50		OHMS	
Switching Speed			0.6	1	µSec	50% TTL to 90% / 10% RF
Transition (Rise/Fall) Time			340	700	nSec	90% / 10% or 10% / 90% RF
Switching (Video) Transients			1.3		V	Peak Value
Intercept Points	*2nd*		+47		dBm	350 / 150 MHz
	3rd		+31		dBm	175 / 200 MHz
RF Power	*Operate*		+2	-1	dBm	0.1 dB Input Compression
	No Damage			+5	dBm	
Operating Temperature		-55	+25	+100	°C	TA

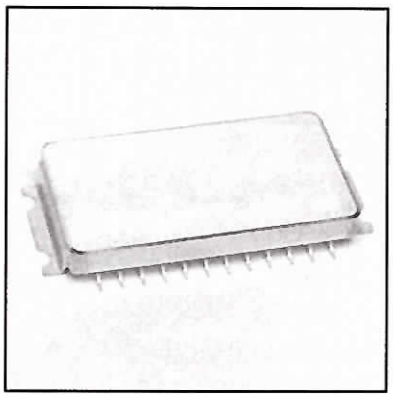

MODEL NUMBER CSWT5103

Transfer Switch/Amplifier

FEATURES

- 50-70 MHz
- Surface Mount Package
- 16.9 dB Gain
- Gain Flatness +0.1 dB
- 69 dB Isolation

MFA

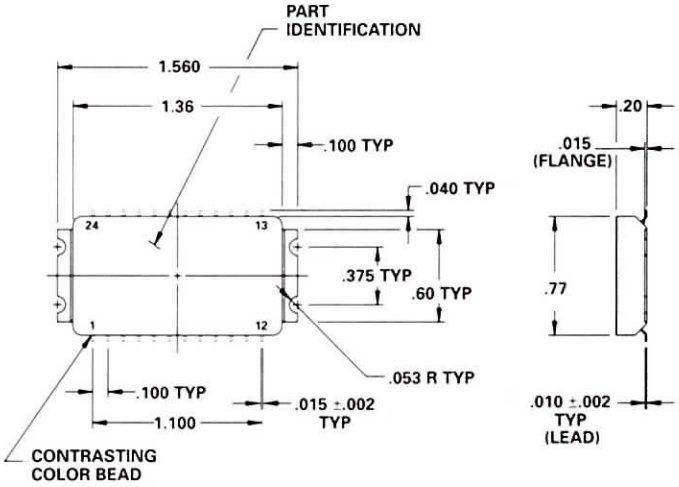

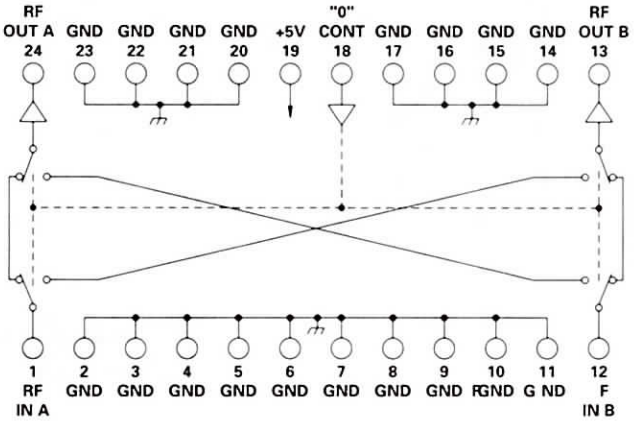

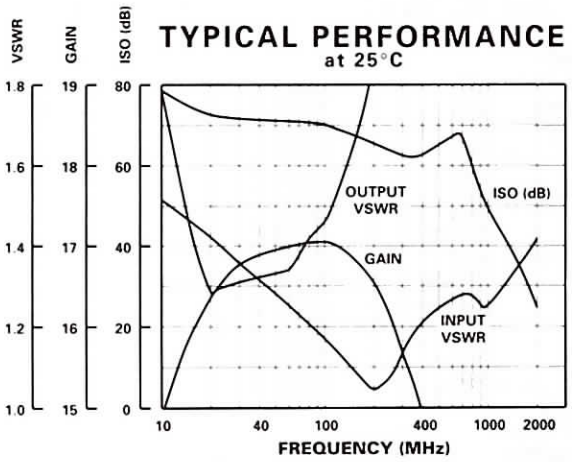

GUARANTEED PERFORMANCE

Parameter		Min	Typ	Max	Units	Conditions
Operating Frequency		50		70	MHz	
DC Current			17.5	20	mA	At +5 VDC Supply
Control Type			TTL			"1" = RF IN A to RF OUT B RF IN B to RF OUT A "0" = RF IN A to RF OUT B RF IN B to RF OUT A
Control Line Isolation		35	62		dB	Output to Control
Gain		16	16.9	18	dB	
Gain Flatness			±0.10	±0.5	dB	
Gain Tracking			±0.10	±0.25	dB	Normal to Crossed
Gain Phase	*50 MHz*	162.5	165.5	168.5	Deg	
	60 MHz	157.5	160.5	163.5	Deg	
	70 MHz	152.0	155.0	158.0	Deg	
Control Current	*High*			±10	µA	VIH = +2.75 V
	Low			±10	µA	VIL = +0.8 V
Isolation		40	69		dB	Off Path Gain Referenced To On Path Gain
VSWR	*(Input/Output) Thru*		1.5/1	1.7/1		
Noise Figure			3.30	4.7	dB	
Impedance			50		OHMS	
Switching Speed			230	300	nSec	50% TTL - 90% / 10% RF
Transition (Rise/Fall) Time			34		nSec	10% / 90% or 90% / 10% RF
Switching (Video) Transients			32	100	mV	Peak Value
Intercept Points	*2nd*		+31		dBm	80 MHz / 30 MHz
	3rd	+20	+23		dBm	40 MHz / 30 MHz
RF Power	*Operate*		+11.2	+10	dBm	1 dB Compression
	No Damage			+21	dBm	
Operating Temperature		0	+25	+65	°C	TA

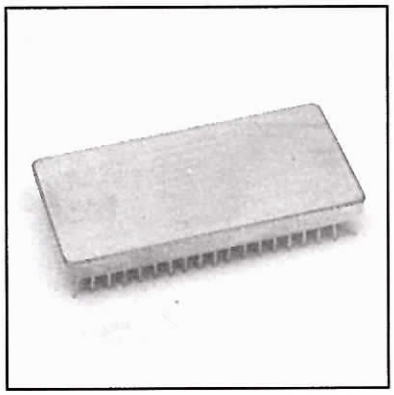

MODEL NUMBER CHD01940

Switch-Attenuator Amplifier HDMIC

FEATURES

- 9-10 MHz
- +30 dB 3rd Order Intercept Point
- 16.5 dB Gain
- +13 dBm 0.1 dBm Compression in Thru State
- Integrated GaAs MMIC Switches, Attenuators, Silicon Transistor Amplifier, and TTL Drivers

MFA

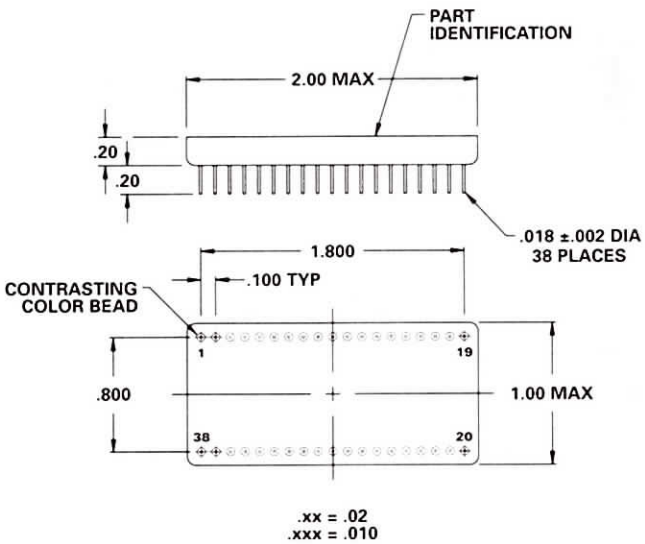

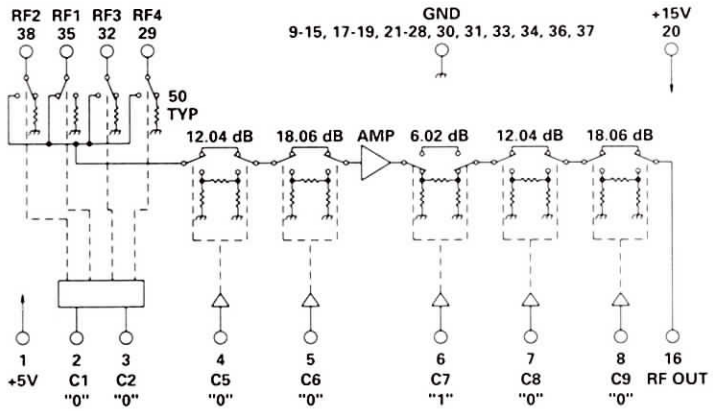

TYPICAL PERFORMANCE
at 25°C

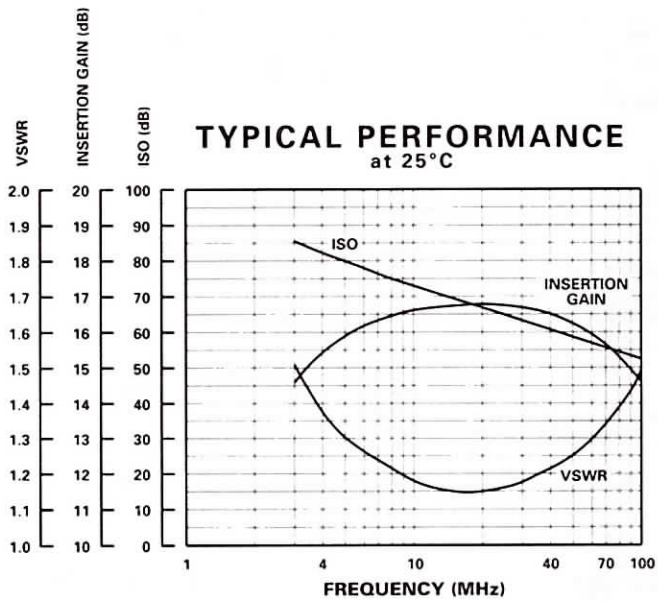

GUARANTEED PERFORMANCE

Parameter		Min	Typ	Max	Units	Conditions
Operating Frequency		9		10	MHz	
DC Current			12	15	mA	At +5 VDC Supply
			51	60	mA	At +15 VDC Supply
Control Type			TTL			
Control Current	*High*		±1	±20	µA	VIH = +2.7V
	Low		±1	±20	µA	VIL = +0.5V
Insertion Loss (Gain)			16.5		dB	
Attenuation:	*Steps*				dB	6.02, 12.04, 12.04, 18.06, 18.06
	Range	0		66.22	dB	
	Accuracy					See Table
	Vs Temp		±.05	±0.2	dB	Value ≤ 33 dB
			±0.1	±0.5	dB	Value ≥ 33 dB
	Vs Phase		±1.0	±10	dB	Between Any Two Attenuation State
VSWR	*Thru*		1.2/1	1.5/1		
	Termination		1.5/1	2.0/1		
Impedance			50		OHMS	
Switching Speed			30	100	nSec	50% TTL to 10% / 90% RF
Transition (Rise/Fall) Time			12		nSec	10% / 90% or 90% / 10% RF
Switching (Video) Transients			130	350	mV	Single Change of Input
			230	600	mV	Any Combination of Change
Intercept Points	*2nd*		+51		dBm	
	3rd	+26	+30		dBm	C5 - C9 = 0
RF Power	*Operate*		+18	+12	dBm	0.1 dB Comp. C5 - C9 = "1"
	Operate			-1	dBm	1.0 dB Comp. C5 - C9 = "0" Any RF Input
	No Damage			+20	dBm	
Isolation		60	73		dB	
Operating Temperature		0	+25	+70	°C	TA

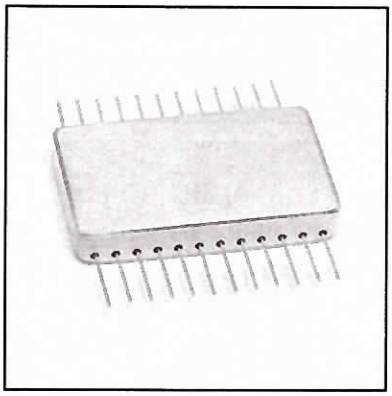

MODEL NUMBER DHD08059

L-Band/UHF Hybrid

FEATURES

- 180-2000 MHz
- High Density MIC
- 26 dB Gain
- Flatpack Case

MFA

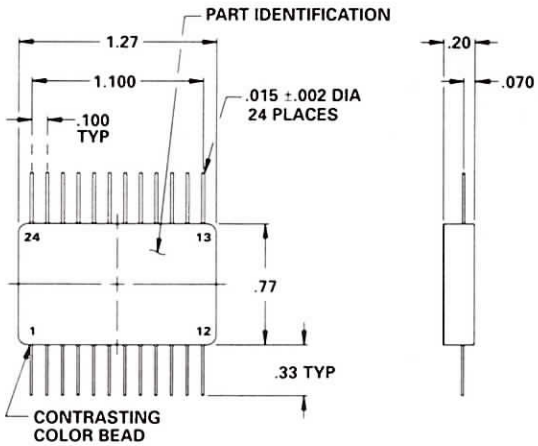

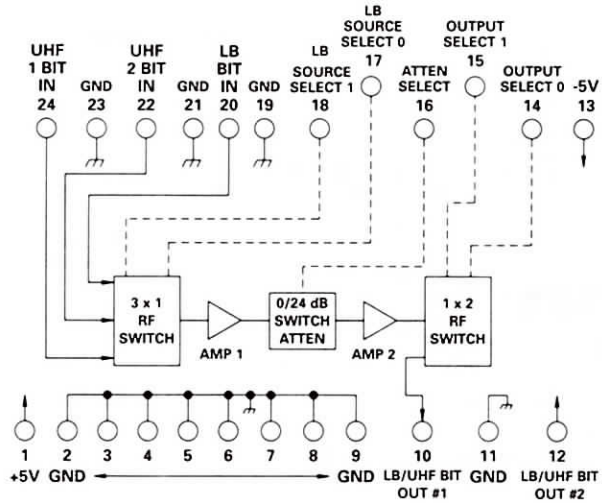

Source Select Control Logic		
Source Select 1	Source Select 0	Function
0	0	Off
0	1	L-Band Bit In
1	0	UHF 2 Bit In
1	1	UHF 1 Bit In

Output Select Control Logic		
Source Select 1	Source Select 0	Function
0	0	Off
0	1	Output #1 On
1	0	Output #2 On
1	1	Not Valid State

Switchable Attenuator Control Logic	
Source Select 1	Function
0	0 dB Selected
1	24 dB Selected

GUARANTEED PERFORMANCE

Parameter		Min	Typ	Max	Units	Conditions
Operating Frequency		180		2000	MHz	
DC Current			0.3	140	mA	At +5 VDC Supply
				20	mA	At -5 VDC Supply
Control Type			TTL			Line
Control Current	*High*			±20	µA	VIH = +2.7 V
	Low			±20	µA	VIL = +0.5 V
Gain		24.5		27.5	dB	Attenuator Disabled
Gain Variation with Temp		-1.5		+1.5		Attenuator Disabled
Switch Attenuation		23		25	dB	
Variation with Temperature		-1		+1		
Output Select RF Switch Isolation		45			dB	Between Any Selected Output and Other Non-Selected Output
Source Select RF Switch Isolation		40			dB	Between Any Selected Input and Other Non-Selected Inputs
VSWR	*Input*			1.5/1		Input Selected or Not Selected
	Output			1.5/1		Output Selected or Not Selected
Impedance			50		OHMS	
Switching Speed			30	100	nSec	50% TTL - 90% / 10% RF
Transition (Rise/Fall) Time			5		nSec	10% / 90% or 90% / 10% RF
Switching (Video) Transients			50		mV	Peak Value
Intercept Points	*2nd*		36		dBm	MHz
	3rd		23		dBm	MHz
RF Power	*Output Power at 1dB Gain Compression*	+10	+13		dBm	Attenuator Disabled
Operating Temperature		-55	+25	+70	°C	TA

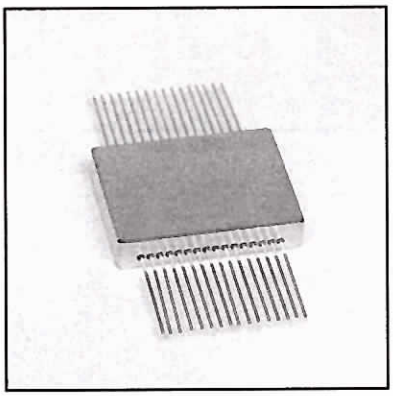

MODEL NUMBER DHD08063

IF/AGC Hybrid

FEATURES

- High Density Hybrid
- 65 dB Voltage Conversion Gain
- 63 dB Attenuation in 1 dB Steps
- Attenuation, Noise Figure and Compression Adapts to Input Signal Levels

MFA

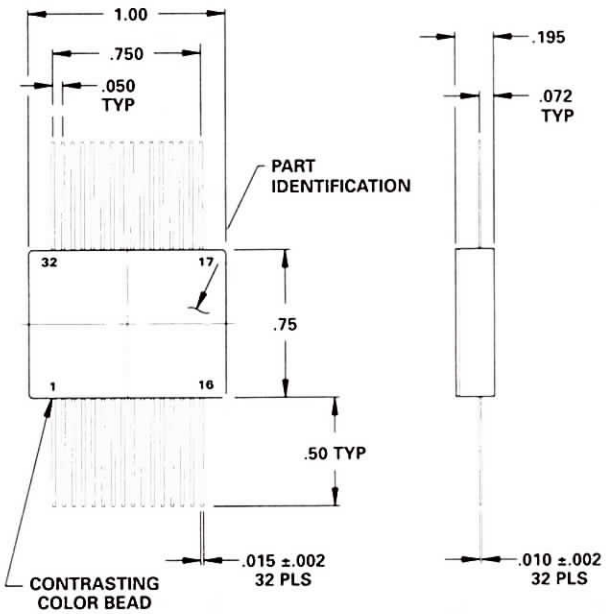

.xx = .02
.xxx = .010

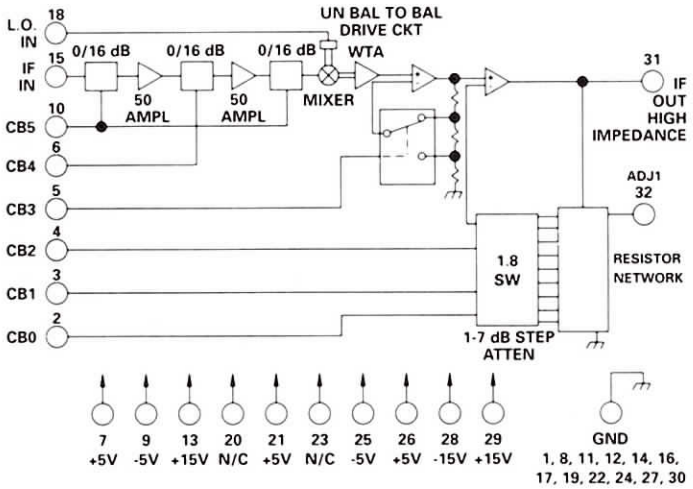

N/C = NO INTERNAL CONNECTION

GUARANTEED PERFORMANCE

Parameter		Min	Typ	Max	Units	Conditions
Operating Freq.	*IF Input*	10		100	MHz	
	LO Input	10		100	MHz	
	IF Output	300		700	KHz	
DC Current			39	50	mA	At +5 VDC Supply
			39	50	mA	At -5 VDC Supply
			130	150	mA	At +15 VDC Supply
			22	30	mA	At -15 VDC Supply
Control Type			TTL			6 Line, See Table
						Logic "0" = Thru
Control Current	*High*		±1	±100	µA	VIH = +2.7 V
	Low		±1	±100	µA	VIL = +0.5 V
Conversion Voltage Gain		63	65	66	dB	
Attenuation	*LSB*		1		dB	
	Range	0		63	dB	1, 2, 4, 8, 16, 32, 64 dB Bits
VSWR			1.2/1	2.0/1		
Impedance			50		OHMS	At Input
			510		OHMS	At Output
Switching Speed			1.6		µSec	
Transition (Rise/Fall) Time			1.5		µSec	
RF Power	*At LO Input*	-12	-10	-8	dBm	
	At IF Input			-35	dBm	At 0 dB Attenuation
				+5	dBm	At 55 dB Attenuation
Initial Noise Figure			11.3	15	dB	Single Sideband, at Minimum Attenuation
Operating Temperature		-40	+25	+100	°C	TA

MODEL NUMBER 100D1797

Modulator Sub-Assembly

FEATURES

- 45-70 MHz
- High Isolation
- 30 nSec Switching Speed
- High Pass Filters for Reduced Transients
- Integrated SPST Blanking Switch, Bi-Phase Modulators, and Digital Attenuators
- 0.5 dB LSB/127.5 dB Attention Range
- TTL Control

MFA

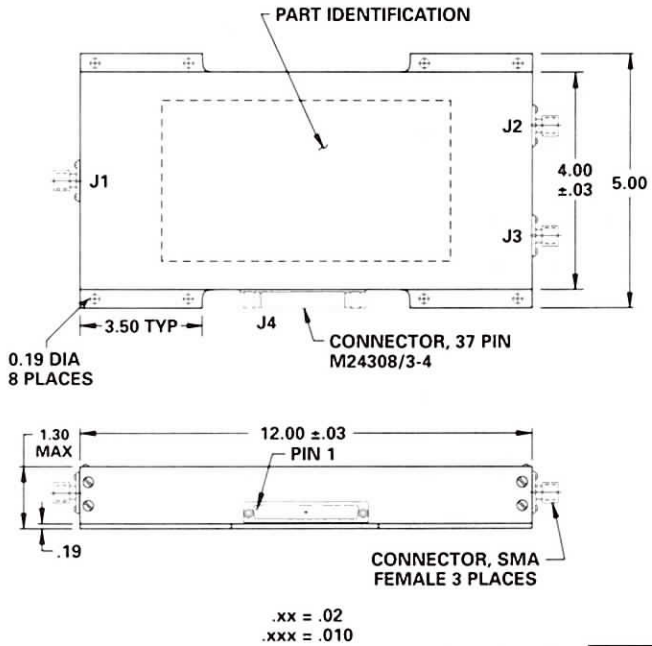

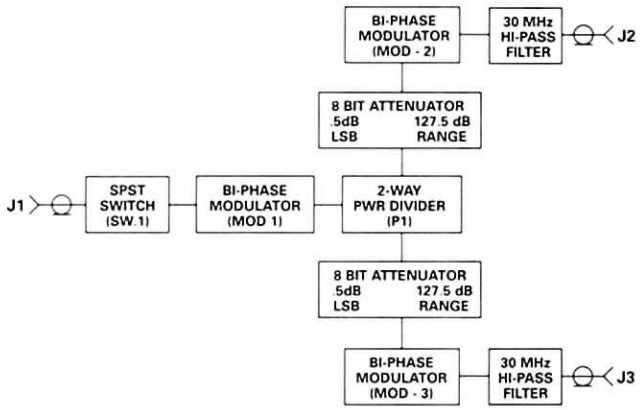

TYPICAL PERFORMANCE

at 25°C

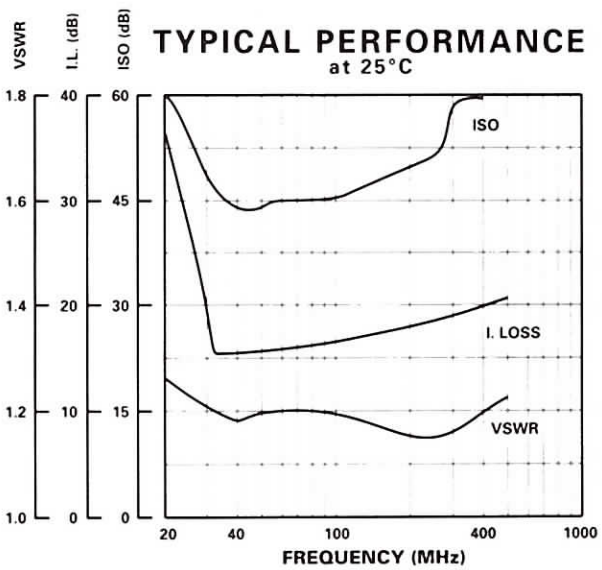

GUARANTEED PERFORMANCE

Parameter		Min	Typ	Max	Units	Conditions
Operating Frequency		45		70	MHz	
DC Current			1	2	A	At +5 VDC Supply
Control Type			TTL			20 Line Switch Modulator "1" = Thru "0" = Off Phase Modulator "1" = 0 DEG "0" = 180° Attenuation Bits "1" = ATTN "0" = Thru
Control Current	*High*		1	±200	µA	VIH = +2.7V
	Low		-60	±200	µA	VIL = +0.5V
Insertion Loss			16	20	dB	
	Balance Between Channels		0.1	±0.5	dB	
	Phase Difference		+0.4	±2	DEG	Insertion Loss State
Isolation		70	83		dB	J1 - J2, J1- J3 (SW1 Off)
		40	43		dB	J2 - J3
Attenuation	*LSB*		0.5		dB	
	Range	0		127.5	dB	0.5, 1, 2, 4, 8, 16, 32, 64
	Accuracy				dB	±(0.15 + 2% of Atten. Setting in dB)
VSWR	*Input*		1.2/1	1.3/1		J1, Input
	Output		1.4/1	1.6/1		J2, J3 Outputs
Impedance			50		OHMS	
Switching Speed			30	50	nSec	50% TTL to 90% / 10% RF
Transition (Rise/Fall) Time			20		nSec	All SW., Mods, + Bits
Intercept Points	*2nd*		+38		dBm	40 MHz / 30 MHz
	3rd		+10		dBm	20 MHz / 30 MHz
RF Power	*Operate*		+14	+10	dBm	0.1 dB Compression
	No Damage			+27	dBm	
Operating Temperature		0	+25	+60	°C	TA

MODEL NUMBER DA0900

Dual Attenuator/Amplifier

FEATURES

- Total Integration of GaAs MMIC Attenuators, Silicon MMIC Amplifiers, and TTL Drivers
- Ultra Small 1.3 x 1.5 Surface Mount Package
- Phase and Amplitude Balance Channel to Channel

MFA

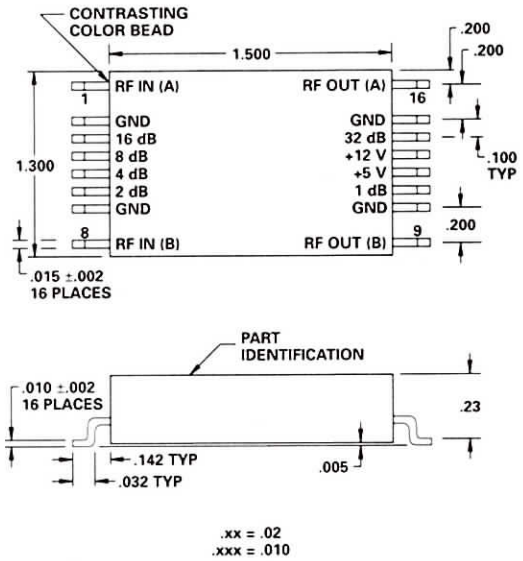

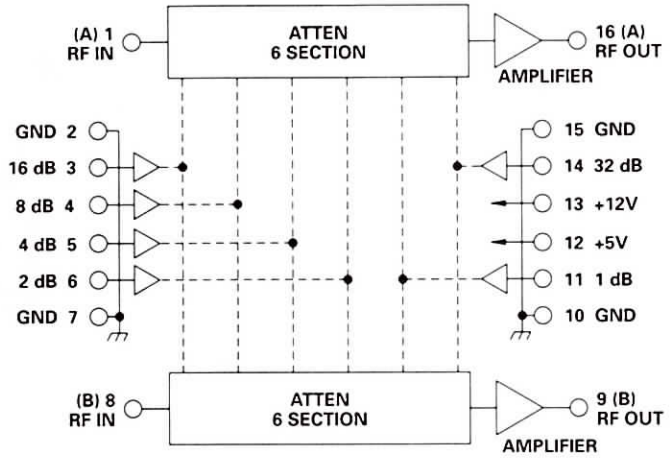

TYPICAL PERFORMANCE

at 25°C

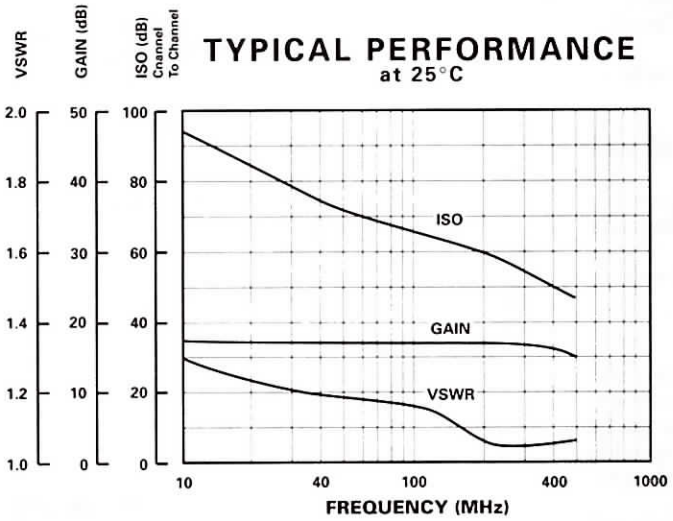

GUARANTEED PERFORMANCE

Parameter		Min	Typ	Max	Units	Conditions
Operating Frequency		20		300	MHz	
DC Current			3	10	mA	At +5 VDC Supply
			34	50	mA	At +12 VDC Supply
Control Type			TTL			6 Line Logic "0" = Thru Logic "1" = Attenuation
Control Current	*High*		0	±40	µA	VIH = +2.7V
	Low		0	±40	µA	VIL = +0.5V
Insertion Gain		14	16	20	dB	
Noise Figure			7	10	dB	
Isolation	*Channel to Channel*	60	66		dB	20 - 100 MHz
		40	54		dB	100 - 300 MHz
Phase Vs. Attenuation			±6	±10	DEG	
	Balance		±2	±5	DEG	Channel to Channel
Attenuation	*LSB*		1		dB	
	Range	0		63	dB	1, 2, 4, 8, 16, 32
	Accuracy				dB	±(0.25 dB ±2% of Atten. Setting in dB)
	Balance		0.2	±0.5	dB	Channel to Channel
VSWR			1.2/1	1.4/1		
Impedance			50		OHMS	
Switching Speed			36	50	nSec	50% TTL to 90% / 10% RF
Transition (Rise/Fall) Time			20		nSec	90% / 10% or 10% / 90% RF
RF Power	*Operate*		+5	+0	dBm	0.1 dB Compression
	No Damage			+20	dBm	
Operating Temperature		-55	+25	+85	°C	TA

MODEL NUMBER CSA09035

Digital Attenuator Assembly

FEATURES

- 1-1200 MHz
- 6 dB LSB, 60 dB Range
- High Intercept Points
- 1.2 dB Insertion Loss
- Phase Balanced
- TTL Control
- Eight Integrated 5 Section Digital Attenuators

MFA

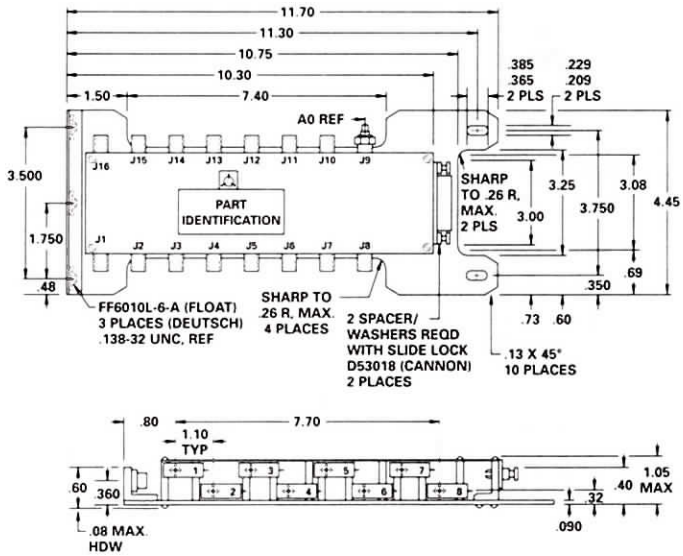

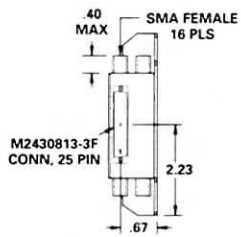

LOGIC TABLE					
PA05	PA04	PA03	PA02	PA01	FUNCTION
0	0	0	0	0	0 dB
0	0	0	0	1	6 dB
0	0	0	1	1	12 dB
0	0	1	0	1	18 dB
0	0	1	1	1	24 dB
0	1	0	1	1	30 dB
0	1	1	0	1	36 dB
0	1	1	1	1	42 dB
1	1	0	1	1	48 dB
1	1	1	0	1	54 dB
1	1	1	1	1	60 dB
X	X	X	X	X	Invalid

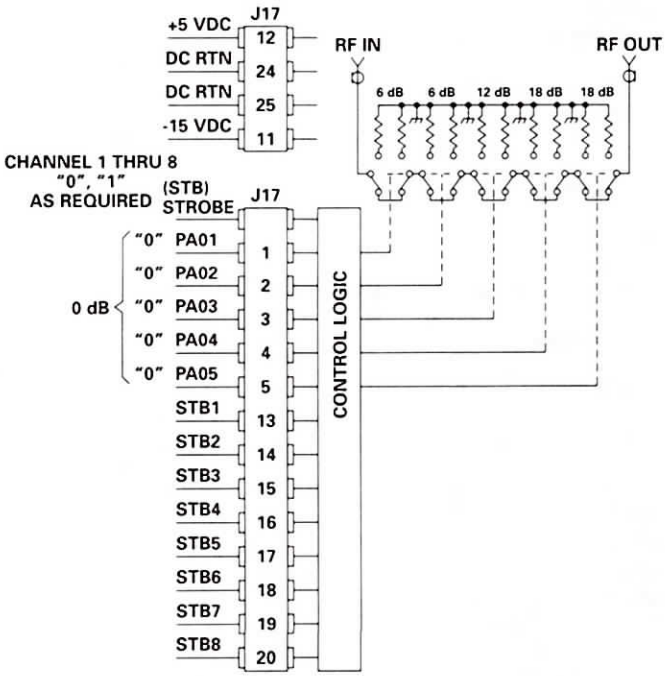

GUARANTEED PERFORMANCE

Parameter		Min	Typ	Max	Units	Conditions
Operating Frequency		1		1200	MHz	
DC Current			290	400	mA	At +5 VDC Supply
			146	200	mA	At -15 VDC Supply
Control Type			TTL			5 Line, See Logic Table Strobe, Active High, Leading Edge Trigger
Control Current	*High*		±1		µA	VIH = +2.7 V
	Low		±1		µA	VIL = +0.5 V
Isolation		85	95		dB	Between Outputs
Insertion Loss			1.2	1.5	dB	
	Phase		±1	±2	DEG	
Attenuation	*LSB*	6			dB	
	Range		60		dB	6, 6, 12, 18, 18
	Accuracy				dB	±(0.4 dB +2% of Attenuation Setting in dB)
VSWR			1.25/1	1.35/1		
Impedance			50		OHMS	
Switching Speed			3.5	10	µSec	50% TTL to 90% / 10% RF
Transition (Rise/Fall) Time			2.0		µSec	10% / 90% to 90% / 10% RF
Switching (Video) Transients			-100	-60	dBm	1 - 100 MHz (At 10 Hz Rate)
			-100	-75	dBm	100 - 1200 MHz (At 10 Hz Rate)
Intercept Points	*2nd*	+50	+75		dBm	
	3rd	+33	+39		dBm	
RF Power	*Operate*		+20	+15	dBm	0.1 dB Compression
	No Damage			+21	dBm	1.0 dB Compression
				+30	dBm	
Operating Temperature		0	+25	+75	°C	TA

MODEL NUMBER CDP0815

4 Section Phase Shifter w/ Coupler

FEATURES

- 1300-1900 MHz
- 22.5° LSB, 337.5° Range
- Integrated Coupler for REF Channel
- +45 dBm 3rd Order Intercept
- ECL Driver
- Replaceable SMA Connector

MFA

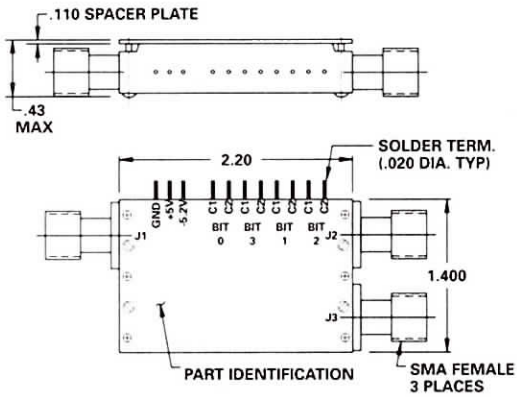

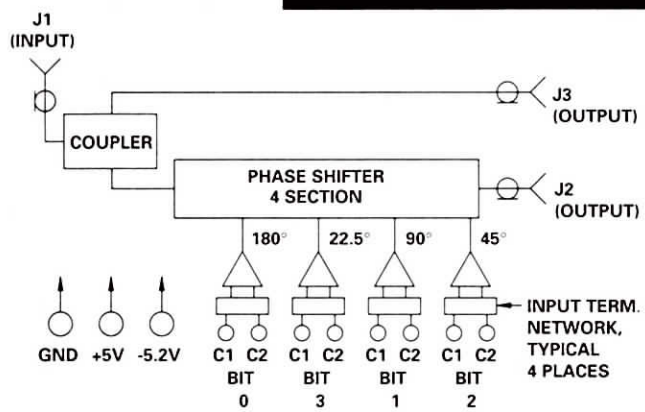

LOGIC TABLE

Control Logic C0	C1	C2	C3	Phase State	Normal Phase Shift (DEG)
0	0	0	0	PS0	0
0	0	0	1	PS1	22.5
0	0	1	0	PS2	45
0	0	1	1	PS3	67.5
0	1	0	0	PS4	90
0	1	0	1	PS5	112.5
0	1	1	0	PS6	135
0	1	1	1	PS7	157.5
1	0	0	0	PS8	180
1	0	0	1	PS9	202.5
1	0	1	0	PS10	225
1	0	1	1	PS11	247.5
1	1	0	0	PS12	270
1	1	0	1	PS13	292.5
1	1	1	0	PS14	315
1	1	1	1	PS15	337.5

LOGIC 1
C1 = -0.6V to -1.0V
C2 = -1.4V to -1.9V

LOGIC 0
C1 = -1.4V to -1.9V
C2 = -0.6V to -1.0V

TYPICAL PERFORMANCE
at 25°C

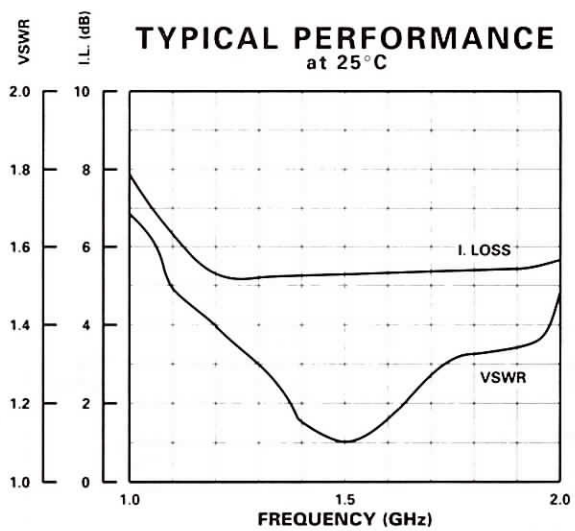

GUARANTEED PERFORMANCE

Parameter		Min	Typ	Max	Units	Conditions
Operating Frequency		1300		1900	MHz	
DC Current			80	115	mA	At +5 VDC Supply
			20	30	mA	At -5.2 VCD Supply
Control Type			ECL			4 Line Differential See Logic Table
Control Current	*High*	7.65	8.5	9.35	mA	C1 = -0.8 V, C2 = -1.65 V
	Low	-7.65	-8.5	-9.35	mA	C1 = -1.65 V, C2 = -0.8 V
Insertion Loss	*J1 - J2 or J1 - J3*		5.5	6.5	dB	
	Balance Between		0.2	0.5	dB	At 25°C
	J1 and J3		0.7	1.0	dB	At Temperature Extremes
Isolation		20	25		dB	Between Ports J2 - J3 or J3 - J2
Phase Shift	*LSB*		22.5		DEG	
	Range	0		337.5	DEG	J2 with respect to J3 Minus PS_0 at F_0 22.5, 45, 90, 180 DEG at F_0
	Accuracy			±5	DEG	For 180 Phase Change
				±10	DEG	Any Phase State
VSWR	*Input*		1.2/1	1.6/1		
	Output		1.2/1	1.6/1		
Impedance			50		OHMS	
Switching Speed			210	350	nSEC	50% ECL to 90% / 10% RF
Transition (Rise/Fall) Time			20		nSEC	90% / 10% or 10% / 90% RF
Switching (Video) Transients			140		mV	Peak Value
Intercept Points	*3rd*		+45		dBm	
RF Power	*Operate*		+20	+18	dBm	0.1 dB Compression
			+25	+23	dBm	1.0 dB Compression
	No Damage			+27	dBm	
Operating Temperature		-55	+25	+71	°C	TA

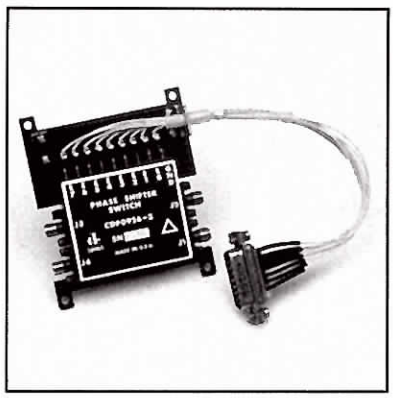

MODEL NUMBER CDP0926

Phase Shifter, 4 Section Connectorized

FEATURES

- 1215-1400 MHz
- 22.5° LSB, 337.5° Range
- TTL Driver
- Replaceable SMA Connector

MFA

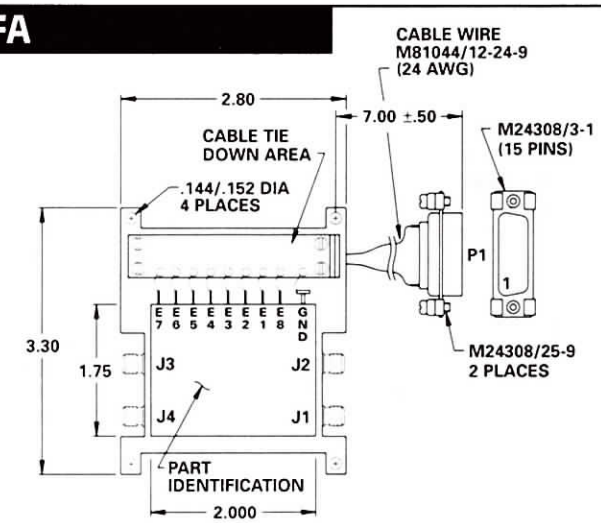

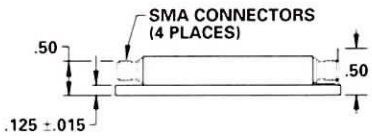

.xx = .02
.xxx = .010

SURFACE "A" CHEM FILM PER MIL-C-5541 CLASS 3, OTHER SURFACES ARE EPOXY PAINT PER MIL-F-14072, COLOR BLACK LUSTERLESS PER MIL-C-22750, COLOR NO. 37038 PER FED-STD-595 OVER PRIMER PER MIL-P-23377 OVER WASHPRIMER PER DOD-P-15328

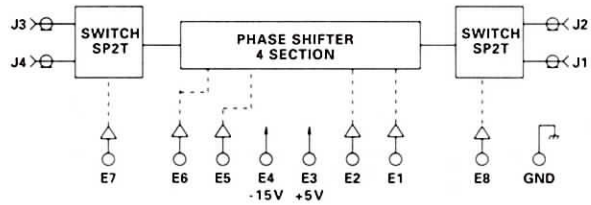

P1 PIN NO.	UNIT PIN NO.	FUNCTION
1	GND	GROUND
2	E3	+5V
3	E4	-15V
4	E1	180°
5	E6	90°
6	E5	45°
7	E2	22.5°
8	-	N/C
9	-	N/C
10	E8	J1/J2
11	E7	J3/J4
12	-	N/C
13	-	GND
14	-	GND
15	-	N/C

N/C = No Connection

TYPICAL PERFORMANCE
at 25°C

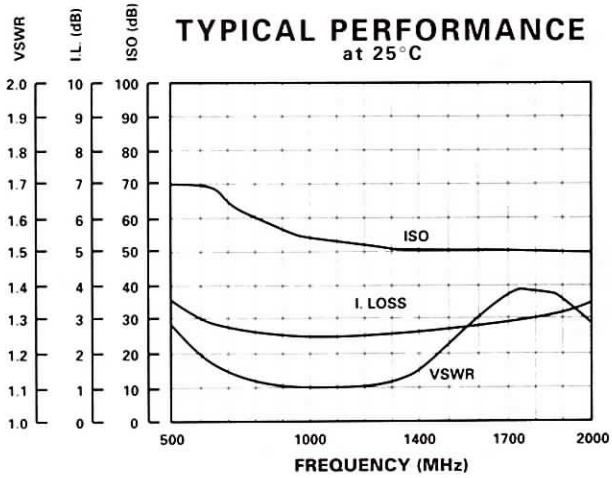

GUARANTEED PERFORMANCE

Parameter		Min	Typ	Max	Units	Conditions
Operating Frequency		1215		1400	MHz	
DC Current			93	200	mA	At +5 VDC Supply
			122	200	mA	At -15 VCD Supply
Control Type			TTL			6 Line Logic "0" = Refer Phase Logic "1" = Phase Shift: E1, E2, E5, E6
Control Current	*High*		0	±20	µA	VIH = +2.7 V
	Low		0	±20	µA	VIL = +0.5 V
Insertion Loss		1.5	2.6	3	dB	At Room Temperature
Phase:	*LSB*		22.5		DEG	
	Range	0		337.5	DEG	22.5, 45, 90, 180 At 1215 MHz
	Accuracy			±6	DEG	
Isolation		40	52		dB	
VSWR			1.13/1	1.5/1		
Impedance			50		OHMS	
Switching Speed			1.7	3.5	µSec	50% TTL to 90% / 10% RF
Transition (Rise/Fall) Time			1.5		µSec	90% / 10% or 10% / 90% RF
Switching (Video) Transients			2		mV	Peak Value
Intercept Points	*2nd*		+68		dBm	2000 / 785 MHz
	3rd		+44		dBm	1000 / 785 MHz
RF Power	*Operate*		+36	+34	dBm	0.2 dB Compression
	No Damage			+36	dBm	
Operating Temperature		-54	+25	+80	°C	TA

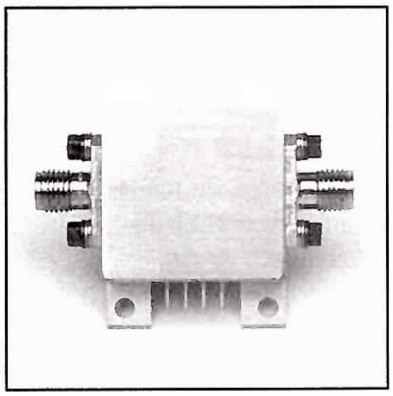

MODEL NUMBER CLM06149

Limiter

FEATURES

- .10-30 MHz
- +37 dBm Maximum Input Power
- +20 dBm 1 dB Compression
- 0.2 dB Insertion Loss
- +25 dBm Leakage
- Low Current Consumption
- Replaceable SMA Connectors

MFA

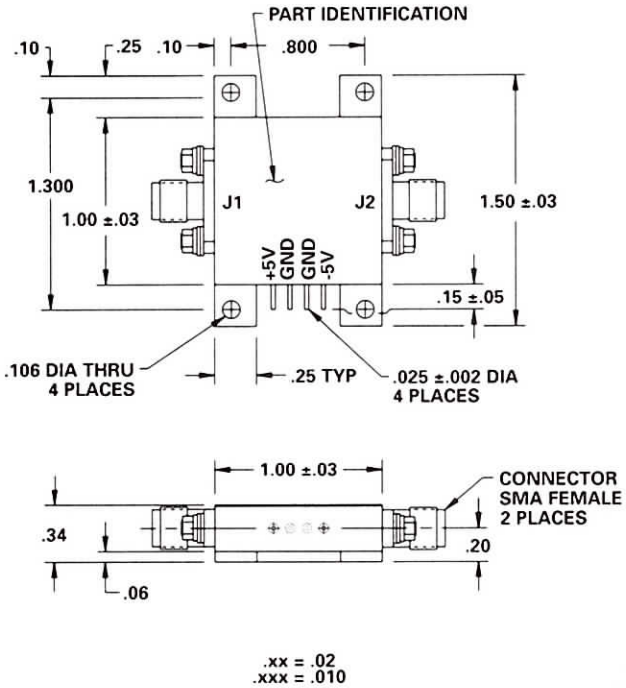

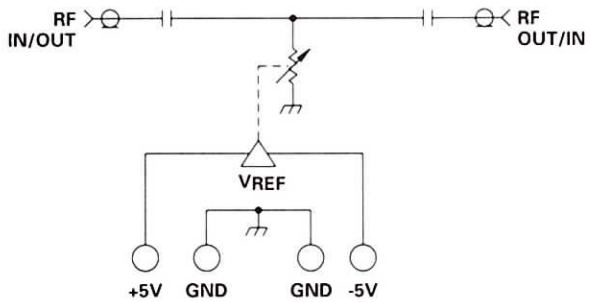

GUARANTEED PERFORMANCE

Parameter		Min	Typ	Max	Units	Conditions
Operating Frequency		.10		32	MHz	
DC Current			4	10	mA	At +5 VDC Supply
			3	10	mA	At -5 VDC Supply
Insertion Loss			0.2	0.35	dBm	At +5 dBm
Leakage			+25	+27	dBm	At Max Power
Spike Duration				50	µSec	
Recovery				500	µSec	
VSWR			1.1/1	1.4/1		At +5 dBm
Impedance			50		OHMS	
Intercept Points	*2nd*	+86			dBm	
	3rd	+49			dBm	
RF Power	*Operate*		+20	+15	dBm	1 dB Compression
	No Damage			+37	dBm	
Operating Temperature		-55	0	+85	°C	TA

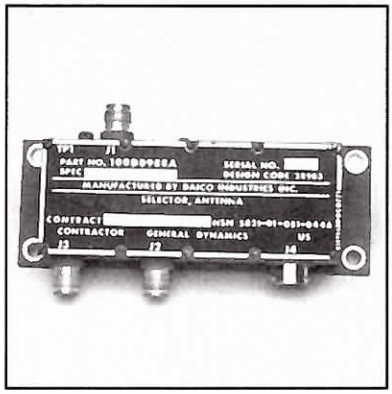

MODEL NUMBER 100D0988

2 Port Antenna Selector

FEATURES

- Connects R/T to 2 Antennas (Upper or Lower)
- Auto Mode Cycles Between Upper and Lower Antenna
- Failsafe Mode Connects R/T to Lower Antenna in the Event of a Power Loss
- Key Function with Memory Automatically Selects the Antenna on which the Last Signal was Received
- BIT Port for Functionality Test in Aircraft

MFA

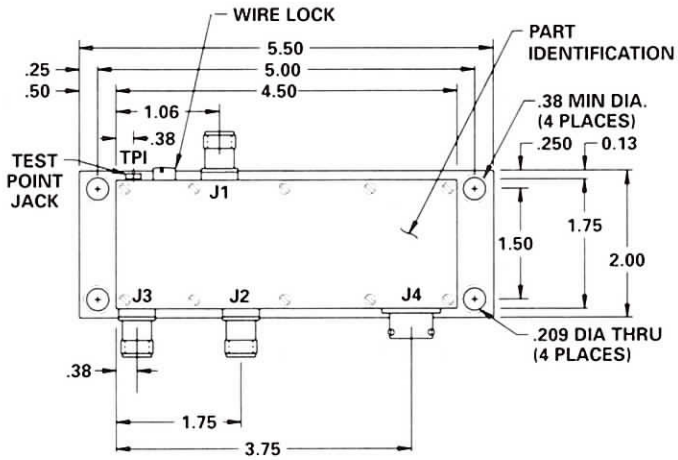

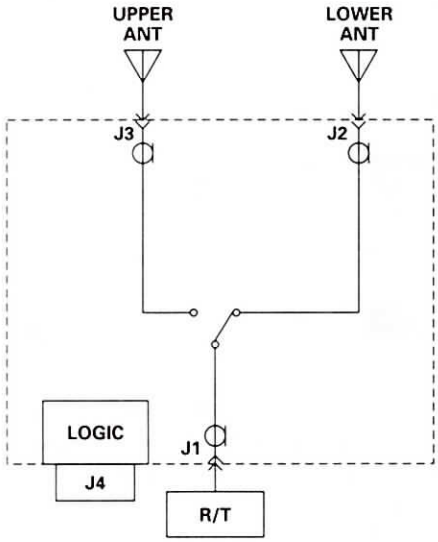

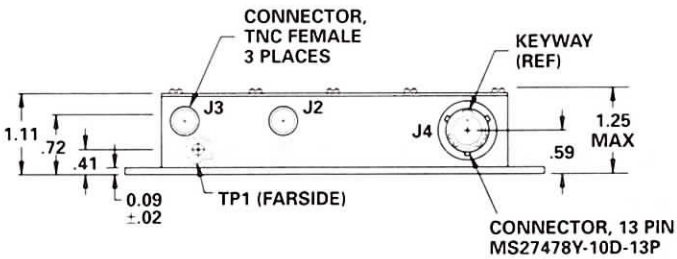

.xx = .02
.xxx = .010

GUARANTEED PERFORMANCE

Parameter	Min	Typ	Max	Units	Conditions
Operating Frequency	DC		400	MHz	
DC Current			150	mA	At +28 VDC Supply
Isolation	40			dB	
Insertion Loss			0.5	dB	
VSWR			1.25/1		
Impedance		50		OHMS	
Switching Speed			5	mSec	
RF Power *Operate*			100	W	Average
			500	W	Peak
Operating Temperature	-54	+25	+71	°C	Intermittent @ +95°C
Weight			9	OZ	

MODEL NUMBER 100D0688	3 Port Antenna Selector

FEATURES

- Connects R/T to 3 Antennas (Upper, Lower or ADF)
- Auto Mode Cycles Between Upper and Lower Antenna
- ADF Override with Key Interlock Prevents Transmission into the ADF Port
- Key Function with Memory Automatically Selects the Antenna on which the Last Signal was Received
- Failsafe Mode Connects R/T To Lower Antenna in the Event of a Power Loss
- BIT Port for Functionality Test in Aircraft

MFA

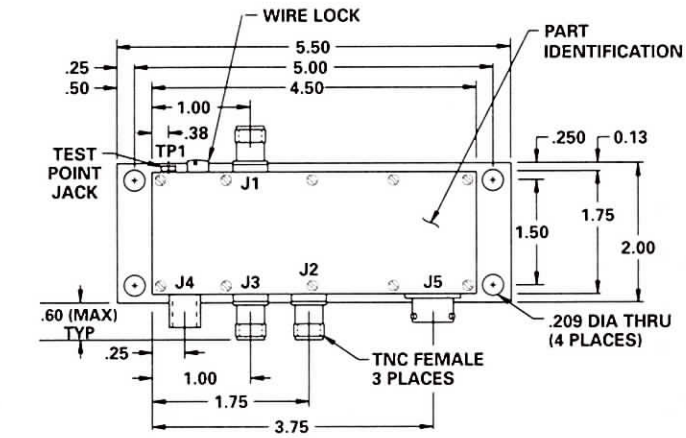

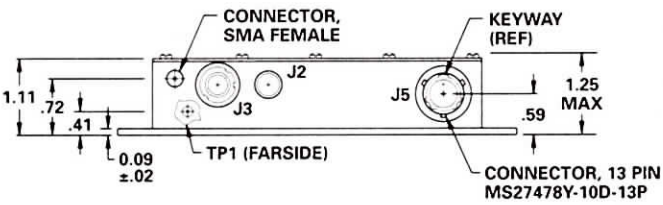

.xx = .02
.xxx = .010

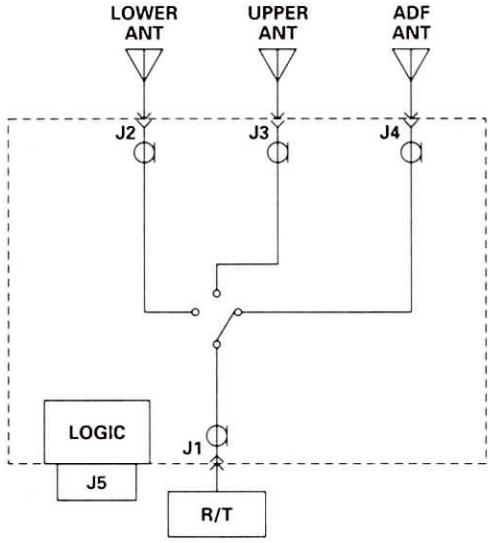

GUARANTEED PERFORMANCE

Parameter	Min	Typ	Max	Units	Conditions
Operating Frequency	DC		400	MHz	
DC Current			150	mA	At +28 VDC Supply
Isolation	40			dB	
Insertion Loss			0.5	dB	
VSWR			1.25/1		
Impedance		50		OHMS	
Switching Speed			5	mSec	
RF Power *Operate*			100	W	Average
			500	W	Peak
Operating Temperature	-54	+25	+71	°C	Intermittent @ +95°C
Weight			9	OZ	

MODEL NUMBER 100D1313

4 Port Antenna Selector

FEATURES

- ADF Override with Key Interlock Prevents Transmission into the ADF Port
- BIT Port For Functionality Test in Aircraft
- Key Function with Memory Automatically Selects the Antenna on which the Last Signal was Received
- Auto Mode Cycles R/T-1 and the D/L Receiver Between Upper and Lower Antennas
- Matrix Configuration Connects 3 R/T to 4 Antennas
- Failsafe Mode Connects R/T-1 to Lower, R/T-2 to Forward, and D/L to Upper Antenna in the Event of a Power Loss

MFA

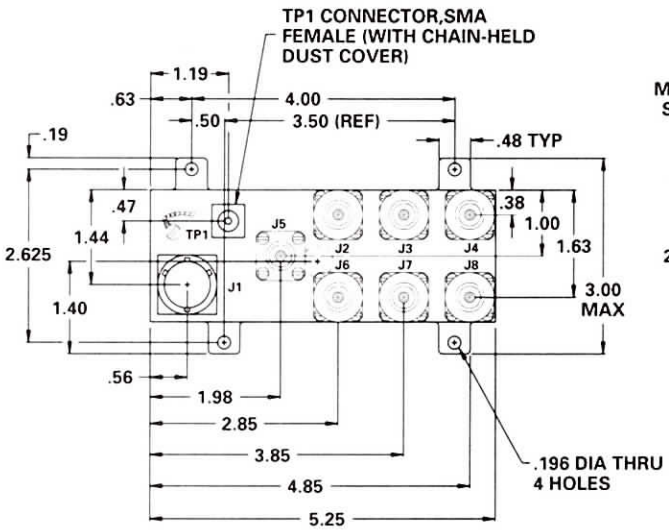

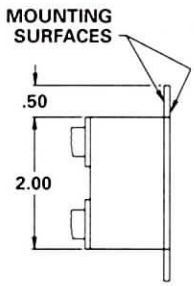

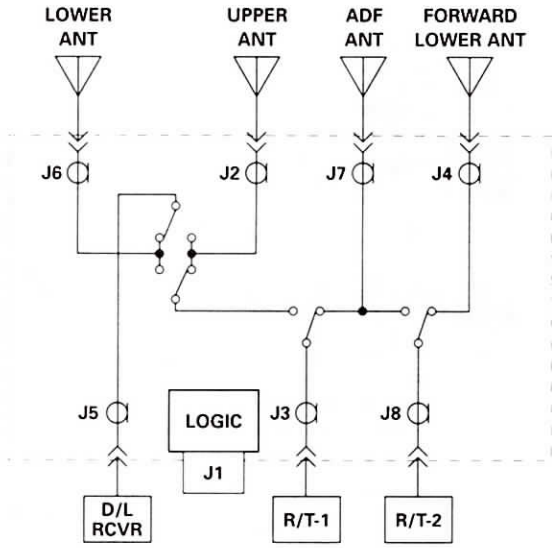

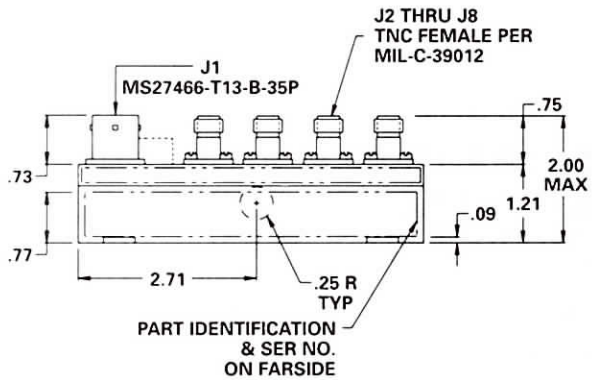

.xx = .02
.xxx = .010

GUARANTEED PERFORMANCE

Parameter		Min	Typ	Max	Units	Conditions
Operating Frequency		DC		400	MHz	
DC Current				500	mA	At +28 VDC Supply
Insertion Loss				0.5	dB	
Isolation	*All Ports*	40			dB	
	RT1 to RT2	80			dB	
VSWR				1.25/1		
Impedance			50		OHMS	
Switching Speed				5	mSec	
RF Power	*Operate*			20	W	Average
				80	W	Peak
Operating Temperature		-54	+25	+71	°C	Intermittent @ +95°C
Weight				18.2	Oz	

MODEL NUMBER 100D1788

4 Port Antenna Selector

FEATURES

- Connects R/T to 4 Antennas (Upper, Lower, ADF or Satcom)
- ADF Override with Key Interlock Prevents Transmission into the ADF Port
- BIT Port for Functionality Test in Aircraft. Available on Separate SMA Connectors or J1 Control Connector
- Failsafe Mode Connects R/T to Lower Antenna in the Event of a Power Loss
- Auto Mode Cycles Between Upper and Lower Antenna Using Solid State Relay Saver Circuitry for Reliability
- Key Function with Memory Automatically Selects the Antenna on which the Last Signal was Received

MFA

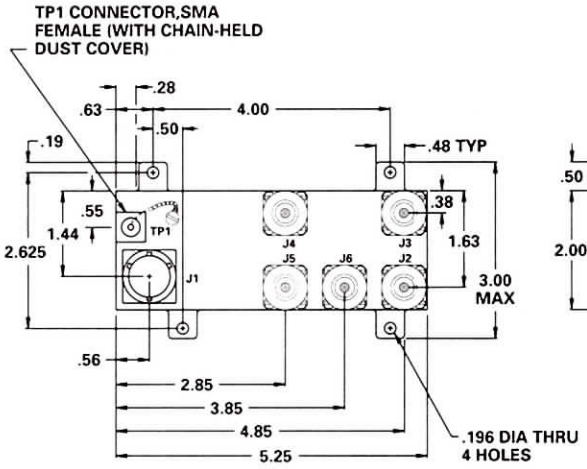

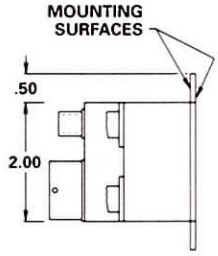

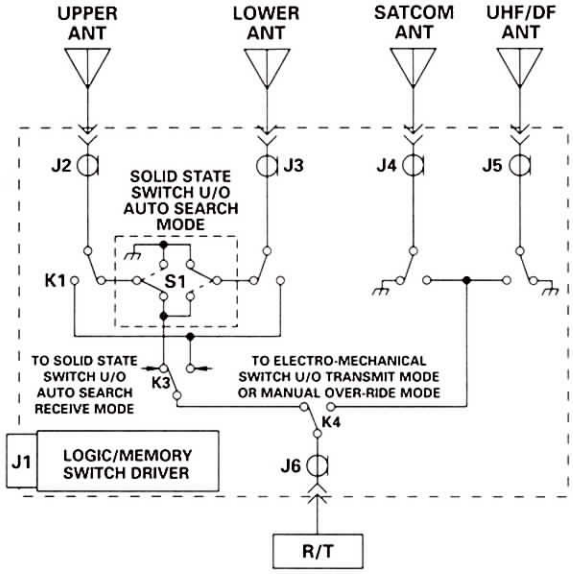

SHOWN IN AUTO CYCLE MODE

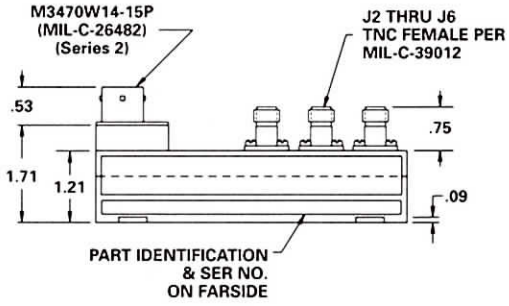

.xx = .02
.xxx = .010

GUARANTEED PERFORMANCE

Parameter	Min	Typ	Max	Units	Conditions
Operating Frequency	225		400	MHz	
DC Current			150	mA	At +28 VDC Supply
Insertion Loss			0.8	dB	
Isolation	30			dB	
VSWR			1.35/1		
Impedance		50		OHMS	
Switching Speed			5	mSec	
RF Power *Operate*			100	W	Average
			500	W	Peak
Operating Temperature	-54	+25	+71	°C	Intermittent @ +95°C
Weight			18.2	OZ	

MODEL NUMBER DSWX9078

4 Port Antenna Selector

FEATURES

- DC-400 MHz
- 40 dB Isolation
- Auto Mode Cycle Between Upper for Two Radio
- Failsafe Mode
- Bit Port for Functionality Testing in Aircraft

MFA

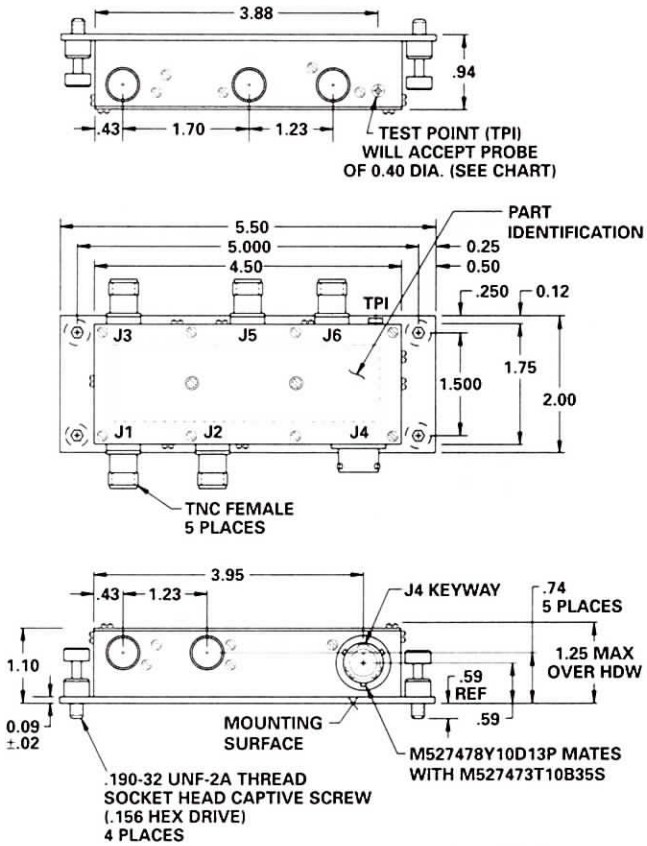

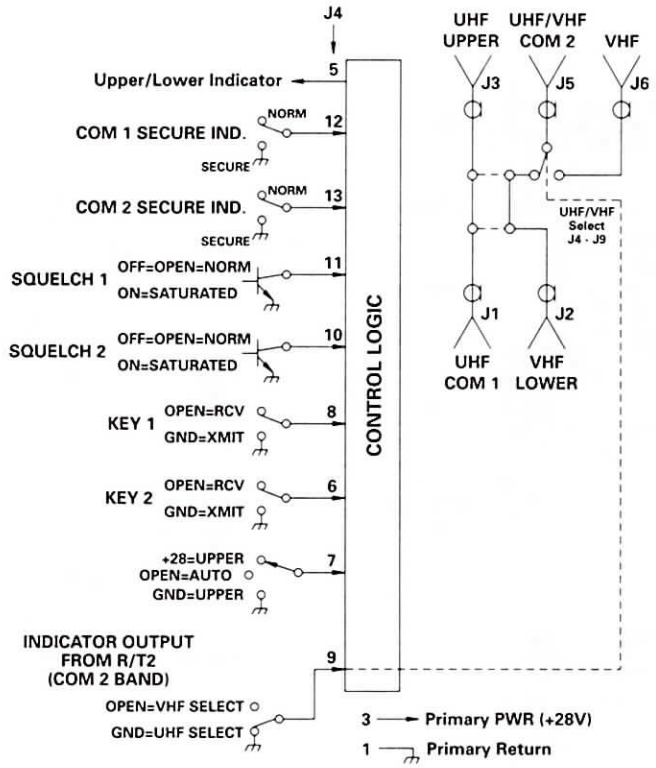

J4 CONNECTOR	
PIN	FUNCTION
1	Primary Power Return
2	Spare
3	Primary Power (+28V)
4	Spare
5	Upper/Lower Indicator
6	Com 2 Transmit Key
7	Mode Select
8	Com 1 Transmit Key
9	Com 2 Band Indicator (UHF/VHF Select)
10	Com 2 Squelch Input
11	Com 1 Squelch Input
12	Com 1 Secure Indicator
13	Com 2 Secure Indicator

Test Point (TPI) Chart			
Power On			
Mode	Com 1 to	Com 2 to	Test Point Voltage
A	Lower	VHF	1V
B	Lower	Upper	3V
C	Upper	VHF	5V
D	Upper	Lower	7V
Power Off			0V

GUARANTEED PERFORMANCE

Parameter		Min	Typ	Max	Units	Conditions
Operating Frequency		DC		500	MHz	
DC Current			210	350	mA	At +28 VDC Supply
Isolation		40	72		dB	
Insertion Loss				0.5	dB	30 - 400 MHz
				0.6	dB	400 - 500 MHz
				0.25	dB	J5 - J6 @ 30 MHz
VSWR			1.2/1	1.25/1		30 - 400 MHz
				1.35/1		400 - 500 MHz
Impedance			50		OHMS	
Switching Speed			2.6	5	mSec	
RF Power	*Operate*			100	W	Average
	No Damage			500	W	Peak
Operating Temperature		-54	+25	+71	°C	Intermittent @ +95°C

MODEL NUMBER CSA09247

Combination T/R - Switch / LNA

FEATURES

- 1215-1400 MHz
- Transmit / Receive / LNA Assembly
- 28 dB Gain
- Low Noise Figure 2.0 dB

MFA

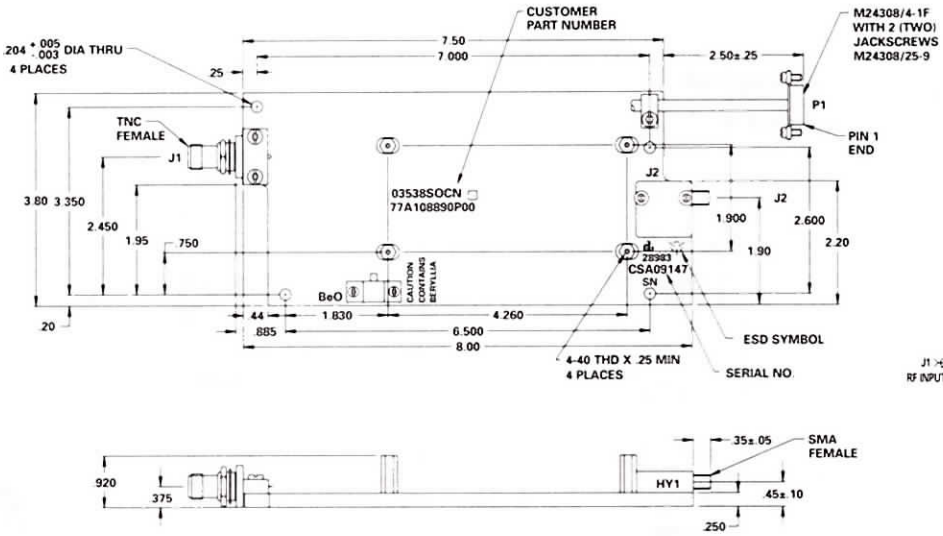

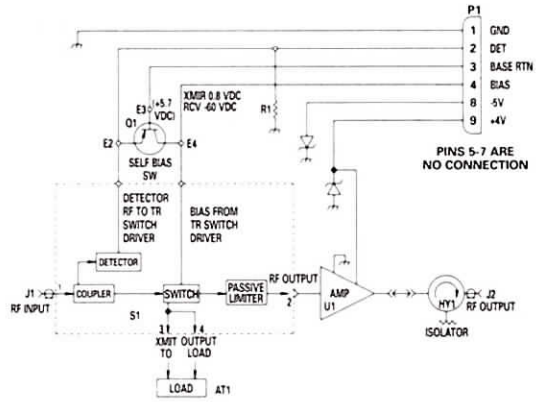

FUNCTIONAL BLOCK DIAGRAM

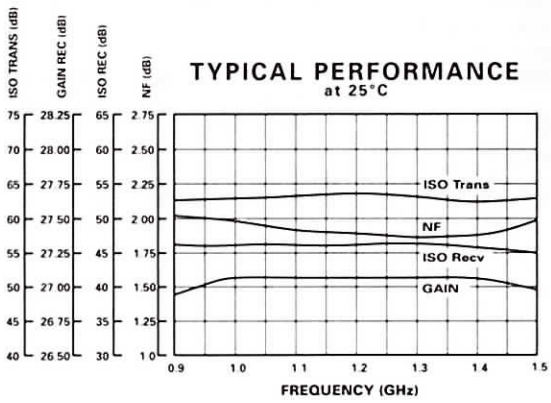

GUARANTEED PERFORMANCE

Parameter		Min	Typ	Max	Units	Conditions
Operating Frequency		1.2		1.4	GHz	
Small Signal Gain		26.8		27.5	dB	
Noise Figure				2.2	dB	Receive State
VSWR In				1.4:1		Receive State
VSWR Out				1.22:1		
Reverse Isolation		40			dB	Receive State
Time Delay		5.9		6.5	nsec	Receive State
Intercept Points	*2nd*		40		dBm	
	3rd	27	28		dBm	
RF Power	*Output*		+20		dBm	
	Input		+66		dBm	1% Duty Cycle Short Pulse
DC Current				200	mA	At +4 Vdc
				10	µA	At -60 Vdc
VSWR In				1.3:1		Transmit State
Isolation	*J1-J2*	50			dB	Transmit State
Isolation	*J1-J2*	30			dB	LNA +4V On
VSWR Trip Self Protection		170		270	Watts	
Operating Temperature		-54	+25	+71	°C	Transmit State

MODEL NUMBER CPD09102	Combiner

FEATURES

- 420-450 MHz
- 0.1 dB Insertion Loss
- 100 dB Isolation
- SMA Connectors

MFA

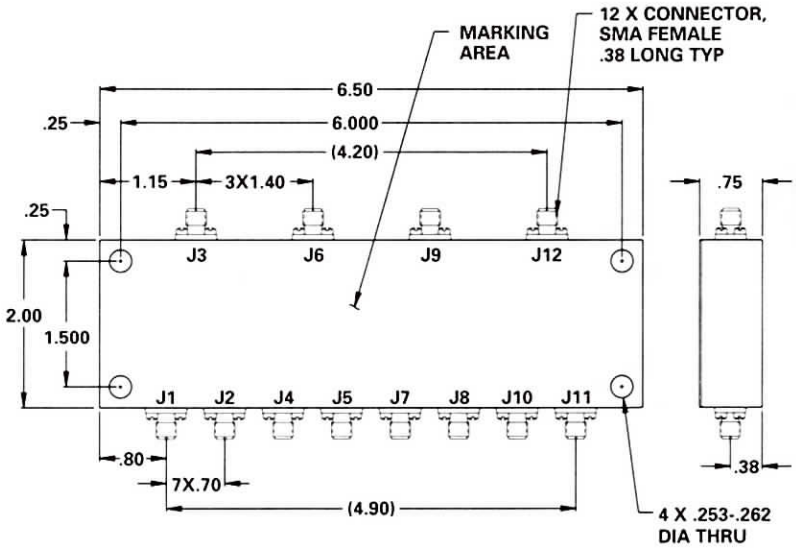

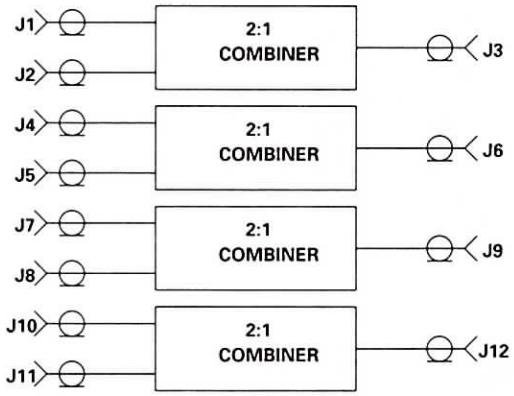

GUARANTEED PERFORMANCE

Parameter	Min	Typ	Max	Units	Conditions
Operating Frequency	420		450	MHz	
Insertion Loss		0.11	0.25	dB	Excluding 3 dB
Isolation	80	110		dB	Between Each Combiner
	20	30		dB	Input Ports
VSWR		1.13/1	1.2/1		
Impedance		50		OHMS	
Operating Temperature	+15		+50	°C	TA

MODEL NUMBER CHD09103

Input Switch

FEATURES

- 420-450 MHz
- 47 dB Directivity
- 100 dB Isolation
- Amplitude Tracking
- Phase Tracking

MFA

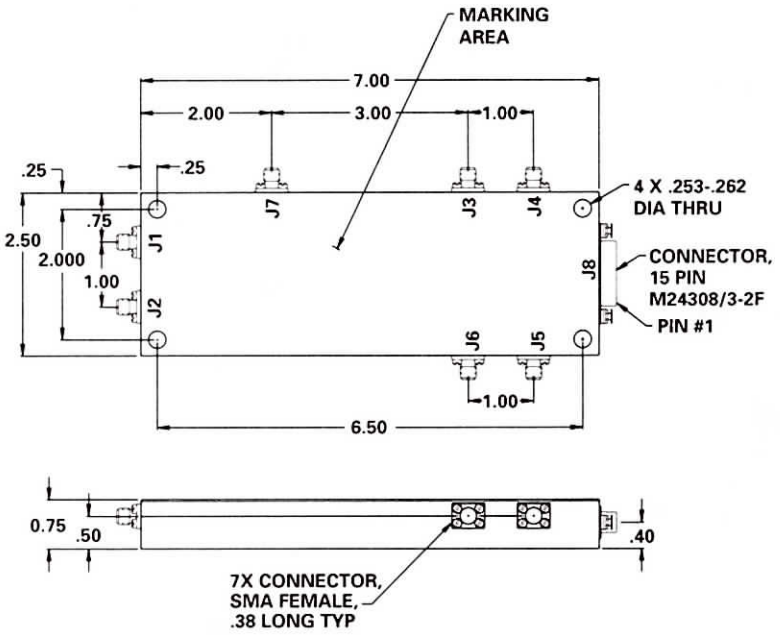

.xx = .02
.xxx = .010

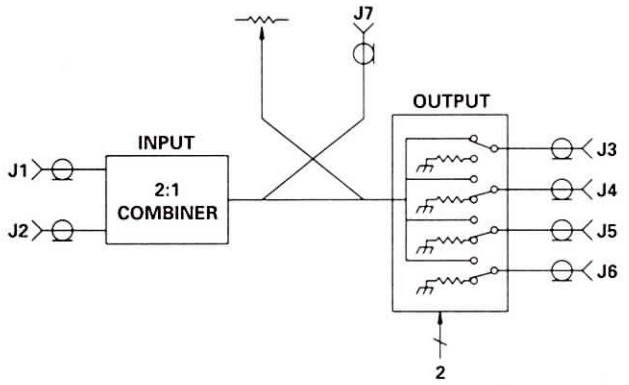

J8 HOOK-UP CHART		
J8 PIN NO	BD NO.	FUNCTION
1	3	BIT 1 (+)
2	2	BIT 1 (-)
3	4	BIT 2 (+)
4	5	BIT 2 (-)
5		
6		
7		
8		
9		
10		
11		
12	7	GND
13	1	GND
14	6	+15V
15	J8-14	+15V

JUMPERED

CONTROL LOGIC TABLE (J8)

BIT 1 (MSB)		BIT 2 (LSB)		SELECTED PORT
PIN NUMBER		PIN NUMBER		
1	2	3	4	
LOW	HIGH	LOW	HIGH	3
LOW	HIGH	HIGH	LOW	4
HIGH	LO	LOW	HIGH	5
HIGH	LOW	HIGH	LOW	6

GUARANTEED PERFORMANCE

Parameter		Min	Typ	Max	Units	Conditions
Operating Frequency		420		450	MHz	
DC Current			54	75	mA	At +15 VDC Supply
Control Type						
Control Current	*High*				µA	VIH = +2.7 V
	Low				µA	VIL = +0.5 V
Insertion Loss			4.3	4.7	dB	Output J3 to J6
		13.0	13.5	14.0	dB	Output J7
Amplitude Tracking				±0.25	dB	Input to Output
Phase Tracking				±0.5	deg	Port to Port
Isolation		90	110		dB	Switch Isolation
Isolation Combiner		20	33		dB	J1 to J2
Coupler Directivity		27	47		dB	
VSWR			1.12/1	1.2/1		
Impedance			50		OHMS	
Switching Speed				3.0	µSec	50% TTL to 90% / 10% RF
Transition (Rise/Fall) Time					nSec	90% / 10% or 10% / 90% RF
Switching (Video) Transients					V	Peak Value
Intercept Points	*2nd*				dBm	
	3rd				dBm	
RF Power	*Operate*		+19		dBm	
	No Damage		+22		dBm	
Operating Temperature		+15		+50	°C	TA

MODEL NUMBER CHD09104

Amplifier / Attenuator / Divider

FEATURES

- 420-450 MHz
- Gain +7.5 dB
- Attenuation 120 dB
- LSB, 6 dB
- Phase Tracking ±3 dB
- 3° Max Phase Tracking

MFA

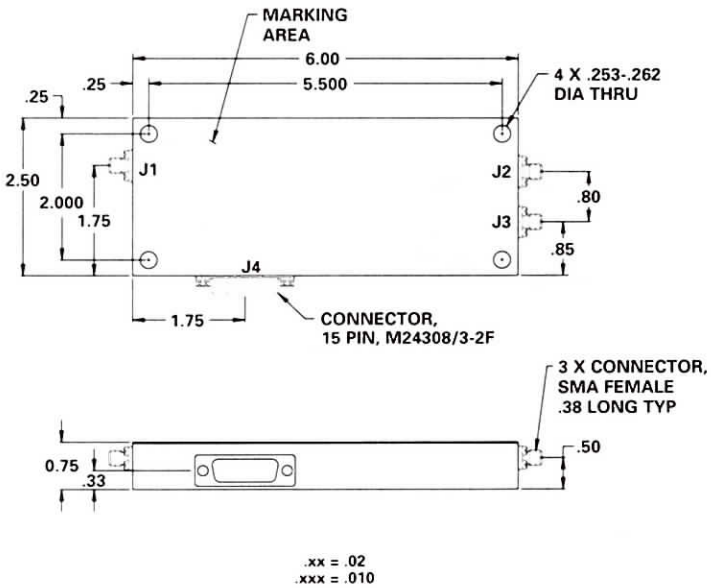

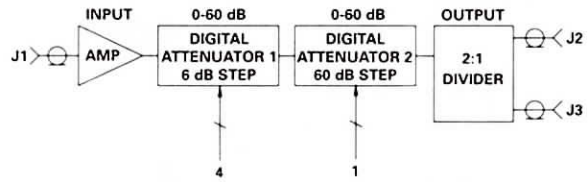

J4

PIN NUMBER	BOARD NUMBER	FUNCTION
1	1	BIT 1 (+)
2	2	BIT 1 (-)
3	3	BIT 2 (+)
4	4	BIT 2 (-)
5	5	BIT 3 (+)
6	6	BIT 3 (-)
7	7	BIT 4 (+)
8	8	BIT 4 (-)
9	9	BIT 5 (+)
10	10	BIT 5 (-)
11	-	NO CONNECTION
12	E1	GND
13	E2	GND
14	11	+15V
15	12	+15V

JUMPER PINS 14 & 15

TABLE I CONTROL LOGIC

BIT 1 6dB			BIT 2 12dB			BIT 3 24dB			BIT 4 48dB			BIT 5 60dB			SETTING
	J4			J4			J4			J4			J4		
LOGIC	PIN 1 (+)	PIN 2 (-)	LOGIC	PIN 3 (+)	PIN 4 (-)	LOGIC	PIN 5 (+)	PIN 6 (-)	LOGIC	PIN 7 (+)	PIN 8 (-)	LOGIC	PIN 9 (+)	PIN 10 (-)	
0	LO	HI	0	LO	HI	0	LO	HI	0	LO	HI	0	LO	HI	THRU
1	HI	LO	0	LO	HI	0	LO	HI	0	LO	HI	0	LO	HI	6dB
0	LO	HI	1	HI	LO	0	LO	HI	0	LO	HI	0	LO	HI	12dB
1	HI	LO	1	HI	LO	0	LO	HI	0	LO	HI	0	LO	HI	18dB
0	LO	HI	0	LO	HI	1	HI	LO	0	LO	HI	0	LO	HI	24dB
1	HI	LO	0	LO	HI	1	HI	LO	0	LO	HI	0	LO	HI	30dB
0	LO	HI	1	HI	LO	1	HI	LO	0	LO	HI	0	LO	HI	36dB
1	HI	LO	1	HI	LO	1	HI	LO	0	LO	HI	0	LO	HI	42dB
0	LO	HI	0	LO	HI	0	LO	HI	1	HI	LO	0	LO	HI	48dB
1	HI	LO	0	LO	HI	0	LO	HI	1	HI	LO	0	LO	HI	54dB
0	LO	HI	1	HI	LO	0	LO	HI	1	HI	LO	0	LO	HI	60dB
0	LO	HI	0	LO	HI	0	LO	HI	0	LO	HI	1	HI	LO	60dB
0	LO	HI	1	HI	LO	0	LO	HI	1	HI	LO	1	HI	LO	120dB
1	HI	LO	1	HI	LO	1	HI	LO	1	HI	LO	1	HI	LO	120dB MIN

LOGIC "1" = (+) INPUT HIGH, (-) INPUT LOW = ACTIVE HIGH
LOGIC "0" = (+) INPUT LOW, (-) INPUT HIGH = ACTIVE LOW

GUARANTEED PERFORMANCE

Parameter		Min	Typ	Max	Units	Conditions
Operating Frequency		420		450	MHz	
DC Current			.5	.75	mA	At +15 VDC Supply
Control Type			TTL			
Control Current	*High*				µA	VIH = +2.7 V
	Low				µA	VIL = +0.5 V
Insertion Gain		+7	7.5	+8	dB	Excluding 3 dB
Isolation		80			dB	Between each Combiner
		20			dB	Output / Output
Attenuation					dB	6, 12, 24, 48, 60
Phase Tracking				±3	deg	Unit to Unit
VSWR			1.2/1	1.3/1		
Impedance			50		OHMS	
Switching Speed				1	µSec	50% TTL to 90% / 10% RF
Transition (Rise/Fall) Time					nSec	90% / 10% or 10% / 90% RF
Switching (Video) Transients					V	Peak Value
Intercept Points	*2nd*				dBm	
	3rd				dBm	
RF Power	*Operate*		+18		dBm	
	No Damage		+20		dBm	
Operating Temperature					°C	TA

MODEL NUMBER CHD09105	Switch / Attenuator / Phase Shifter

FEATURES

- 420-450 MHz
- Amplitude Tracking ± 0.25 dB Port / Port
- Phase Tracking ± 3° Max
- 6 Bit Attenuator, 1 dB LSB
- 180° Phase Shift

MFA

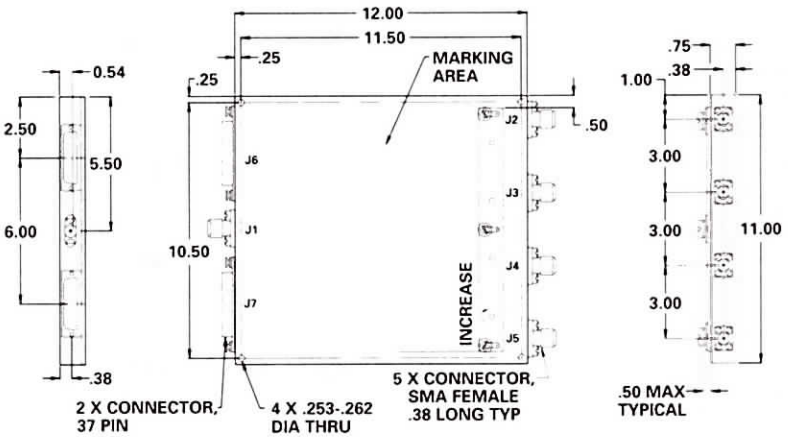

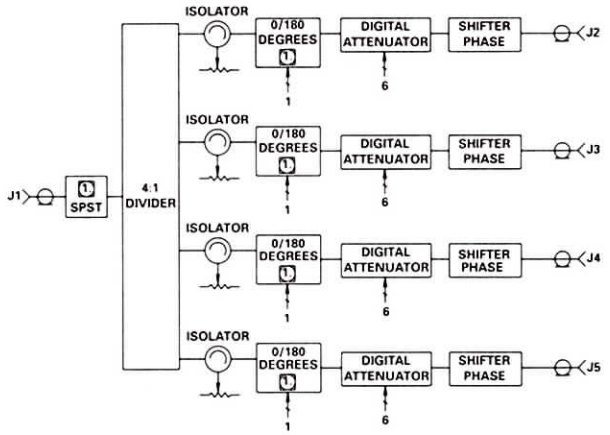

GUARANTEED PERFORMANCE

Parameter		Min	Typ	Max	Units	Conditions
Operating Frequency		420		450	MHz	
DC Current			550	600	mA	At +15 VDC Supply
Control Type			TTL			
Control Current	*High*				µA	VIH = +2.7 V
	Low				µA	VIL = +0.5 V
Insertion Loss			10	11.1	dB	Excluding 3 dB
Isolation		80			dB	Between each Combiner
		20			dB	Input Ports
Attenuation					dB	1, 2, 4, 8, 16, 32
Phase Tracking				±3	deg	Unit to Unit - Port to Port
Attenuation Tracking				±0.5	dB	Unit to Unit
				±0.25	dB	Port to Port
Phase				±2	deg	180°
VSWR			1.2/1	1.3/1		
Impedance			50		OHMS	
Switching Speed				1	µSec	50% TTL to 90% / 10% RF
Transition (Rise/Fall) Time					nSec	90% / 10% or 10% / 90% RF
Switching (Video) Transients					V	Peak Value
Intercept Points	*2nd*				dBm	
	3rd				dBm	
RF Power	*Operate*	+13			dBm	
	No Damage	+16			dBm	
Operating Temperature		+15		+50	°C	TA

MODEL NUMBER CHD09106

Switch / Attenuator / Phase Shifter

FEATURES

- 420-450 MHz
- Amplitude Tracking ± 0.25 dB Port / Port
- Phase Tracking ±3° Max
- Isolation (Input / Output, 111 dB)

MFA

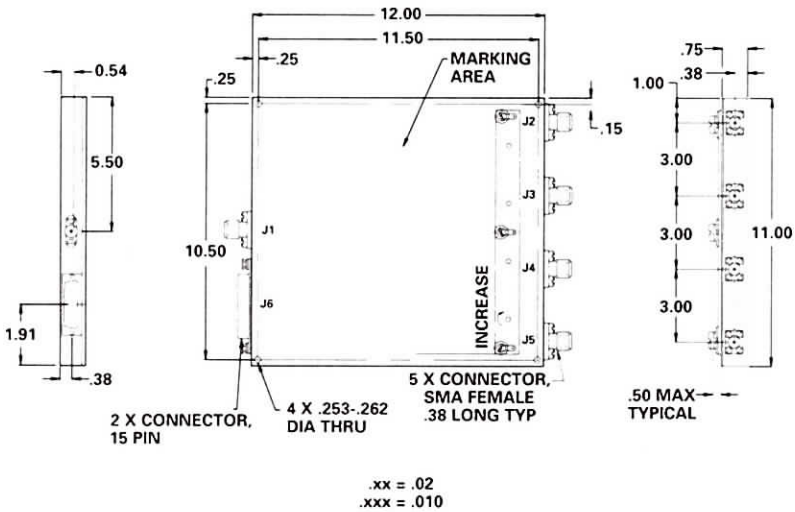

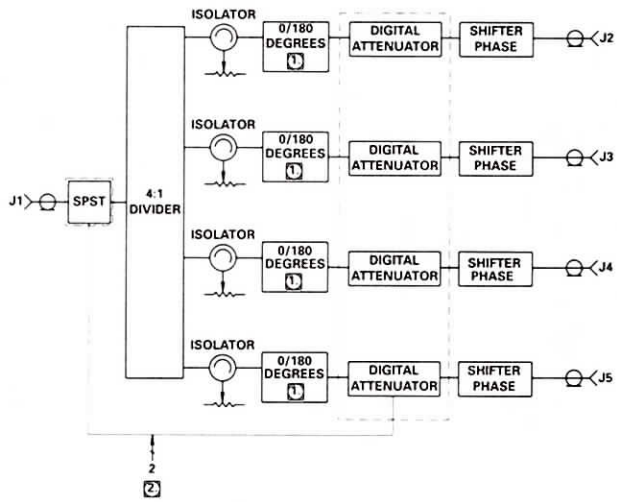

GUARANTEED PERFORMANCE

Parameter		Min	Typ	Max	Units	Conditions
Operating Frequency		420		450	MHz	
DC Current			150	200	mA	At +15 VDC Supply
Control Type						
Control Current	*High*				µA	VIH = +2.7 V
	Low			11	µA	VIL = +0.5 V
Insertion Loss			10		dB	Excluding 3 dB
Isolation		90	111		dB	In / Out
		40	65		dB	Out / Out
Amplitude Tracking				±0.25	dB	Port / Port
				±0.5	dB	Unit / Unit
Phase Tracking				±3	°C	Unit / Unit
VSWR			1.0/1	1.3/1		
Impedance			50		OHMS	
Switching Speed				1	µSec	50% TTL to 90% / 10% RF
Transition (Rise/Fall) Time					nSec	90% / 10% or 10% / 90% RF
Switching (Video) Transients					V	Peak Value
Intercept Points	*2nd*				dBm	
	3rd				dBm	
RF Power	*Operate*	+13			dBm	
	No Damage	+16			dBm	
Operating Temperature		+15		+50	°C	TA

MODEL NUMBER CHD09107	Combiner

FEATURES

- 420-450 MHz
- Isolation 115 dB Typical
- Phase Tracking
- Amplitude Tracking
- 0.5 dB Insertion Loss

MFA

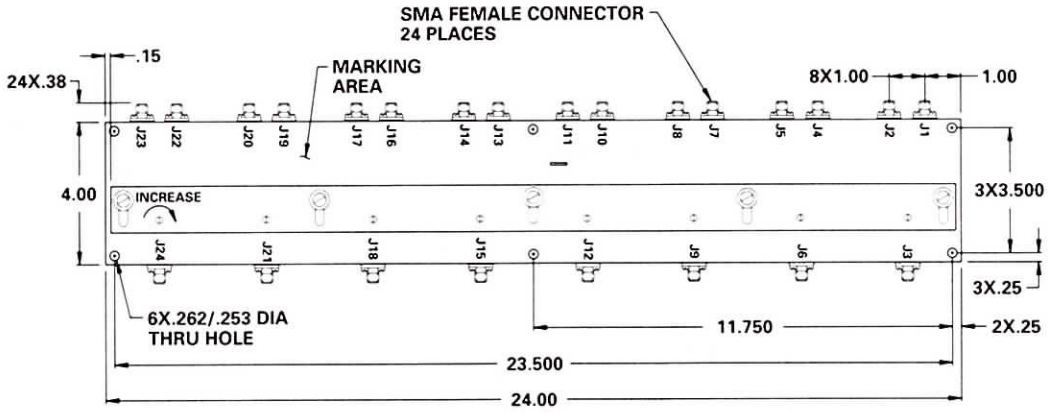

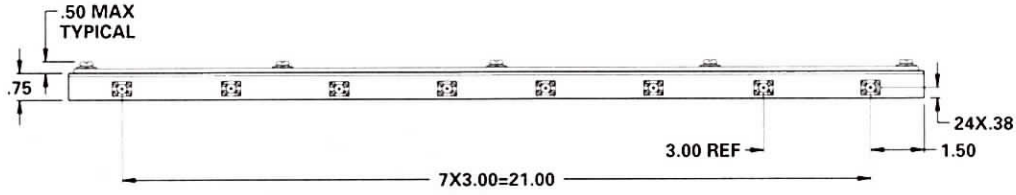

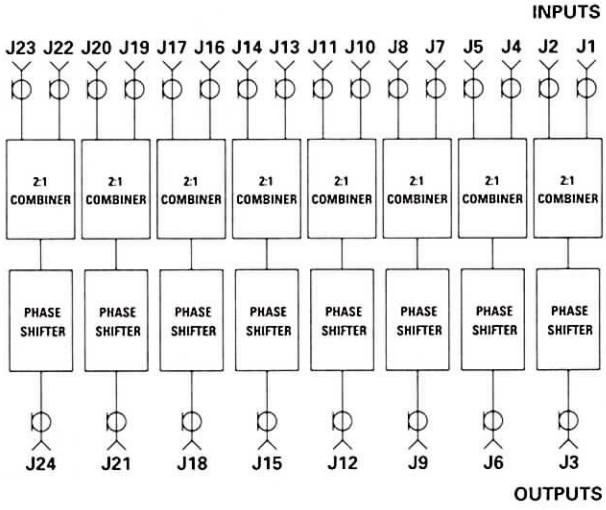

GUARANTEED PERFORMANCE

Parameter	Min	Typ	Max	Units	Conditions
Operating Frequency	420		450	MHz	
Insertion Loss		0.2	0.5	dB	Excluding 3 dB
Isolation	80	110		dB	Between each Combiner
	20	28		dB	Input Ports
Amplitude Tracking			±0.25	dB	
Phase Similarity			±3	deg	Channel / Channel
VSWR		1.13/1	1.2/1		
Impedance		50		OHMS	
Operating Temperature	+15		+50	°C	TA

MODEL NUMBER DP0560	Phase Shifter, 3 Section

FEATURES

- 461-471 MHz
- 45° LSB, 315° Range
- Integrated Power Divider for REF Channel
- Integrated Amplifier for Equal Insertion Loss
- ECL Driver

MFA

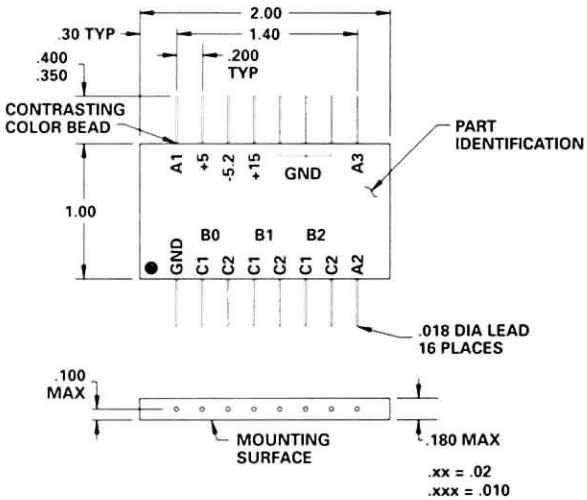

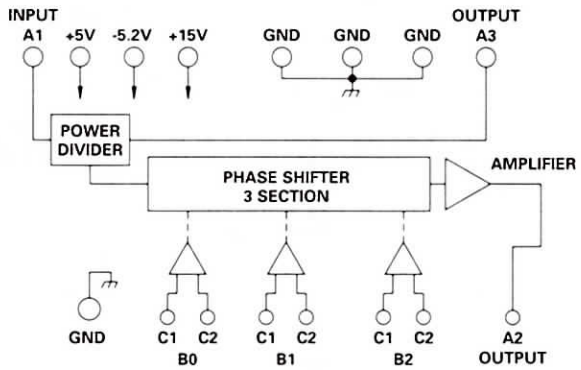

LOGIC TABLE

Control Logic B2	B1	B0	Phase State	Nominal Phase Shift (DEG)
0	0	0	PS0	0
0	0	1	PS1	45
0	1	0	PS2	90
0	1	1	PS3	135
1	0	0	PS4	180
1	0	1	PS5	225
1	1	0	PS6	270
1	1	1	PS7	315

LOGIC "1"
C1 = -0.6V to -1.0V
C2 = -1.4V to -1.9V

LOGIC "0"
C1 = -1.4V to -1.9V
C2 = -0.6V to -1.0V

TYPICAL PERFORMANCE

A1 - A2 PARAMETERS at 25°C

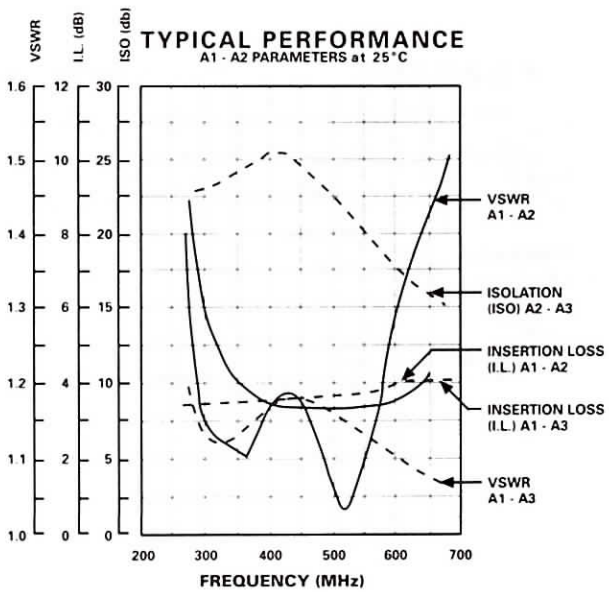

GUARANTEED PERFORMANCE

Parameter		Min	Typ	Max	Units	Conditions
Operating Frequency		461	466	471	MHz	
DC Current			75	100	mA	At +15 VDC Supply
			60	150	mA	At +5 VCD Supply
			90	150	mA	At -5.2 VDC Supply
Control Type			ECL			2 Line Differential See Logic Table
Control Current	*High*	7.65	8.5	9.35	mA	C1 = -0.8V, C2 = -1.65V
	Low	-7.65	-8.5	-9.35	mA	C1 = -1.65V, C2 = -0.8V
Insertion Loss	*A1 - A2*	3.2	3.5	4.1	dB	At +25°C
	or A1 - A3		3.8	4.5	dB	At Temperature Extremes
	Balance Between		0.1	0.75	dB	At 25°C
	A2 and A3		0.3	1.0	dB	At Temperature Extremes
Isolation		20	25		dB	Between Ports A2 - A3 or A3 - A2
Phase Shift	*LSB*		45		DEG	
	Range	0		315	DEG	45, 90, 180 DEG. J2 with Respect to J3 Minus PS0
	Accuracy			±5	DEG	for 180 Phase Change
				±20	DEG	Any Phase State
VSWR	*Input*		1.2/1	1.6/1		
	Output		1.2/1	1.6/1		
Impedance			50		OHMS	
Switching Speed			300	400	nSec	50% ECL to 90% / 10% RF
Transition (Rise/Fall) Time			40		nSec	90% / 10% or 10% / 90% RF
Switching (Video) Transients			10		mV	Peak Value
Intercept Points	*2nd*		N/A		dBm	
	3rd		+37		dBm	440 MHz / 453 MHz Inputs
RF Power	*Operate*		+20	+18	dBm	0.1 dB Compression
			+25	+21	dBm	1.0 dB Compression
	No Damage			+23	dBm	
Operating Temperature		-54	+25	+71	°C	TA

MODEL NUMBER 100D9288	Switch Selector UHF Antenna

FEATURES

- Connects R/T to Antennas (Upper, Lower, DF, or Satcom)
- Auto Mode Cycles between Upper and Lower Antenna
- Failsafe Mode
- Key Function with Memory Auto Selects Antenna which Last Signal was Received

MFA

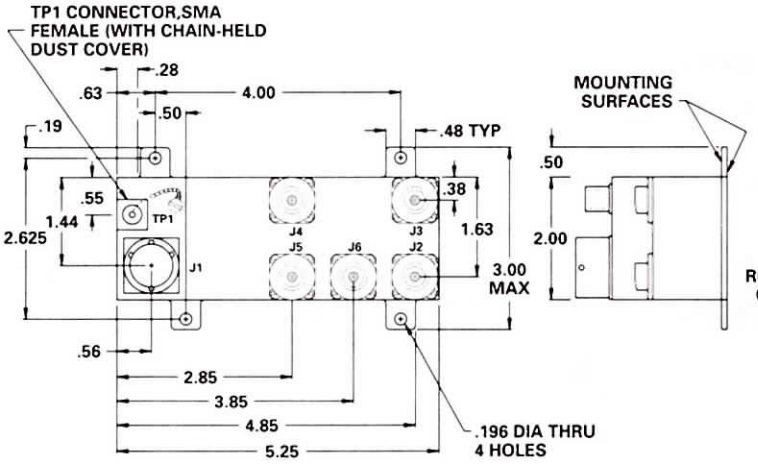

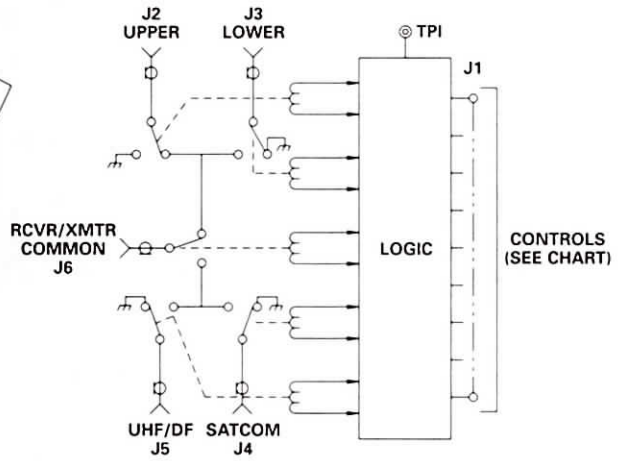

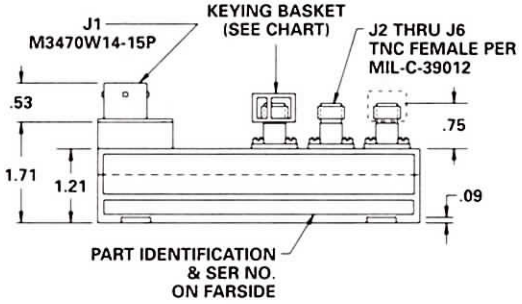

.xx = .02
.xxx = .010

J1 CONTROL CHART	
Pin	Function
A	DC Return
B	Spare
C	+28V IN
D	X - Mode
E	Test Point
F	Spare
G	Mode Control
H	Key
J	Sat Com Enabled
K	UHF/DF
L	Squelch
M	Chassis GND
N	Spare
P	Spare
R	Spare

Connector Chart - RF			Key Angle Deg	
Connector	Function	Keying 6T5M1377TXX	α	β
J2	Upper	600A1025-3	120	144
J3	Lower	600A1025-4	72	144
J4	Sat Com	600A1025-1	72	120
J5	UHF - DF	600A1025-2	96	96
J6	Receiver/ Transmit	No Key	-	-

MODEL NUMBER CSWX9290

High Power Antenna Selector

FEATURES

- 420-450 MHz
- 100 Watt AM
- 125 Watt FM

MFA

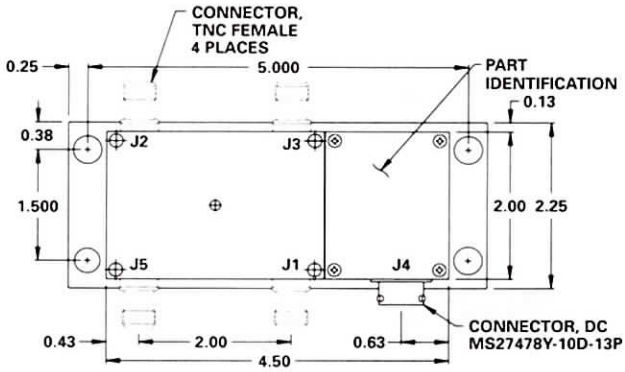

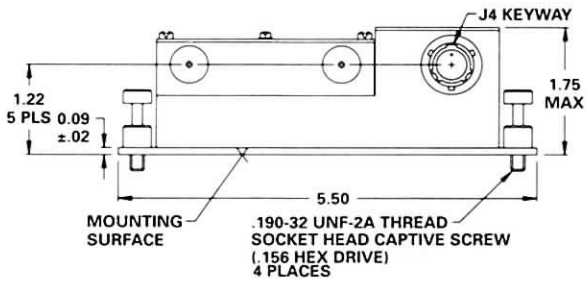

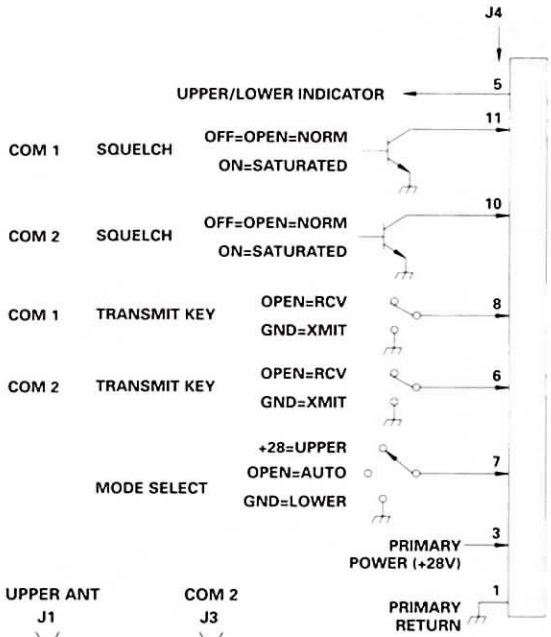

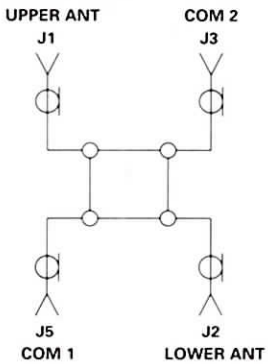

J4 CONNECTOR CHART	
PIN	FUNCTION
1	PRIMARY POWER RETURN
2	SPARE
3	PRIMARY POWER (+28V)
4	SPARE
5	UPPER/LOWER INDICATOR
6	COM 2 TRANSMIT KEY
7	MODE SELECT
8	COM 1 TRANSMIT KEY
9	SPARE
10	COM 2 SQUELCH OUTPUT
11	COM 1 SQUELCH OUTPUT
12	SPARE
13	SPARE

CONN	FUNCTION
J1	UPPER
J2	LOWER
J3	COM 2
J5	COM 1

GUARANTEED PERFORMANCE

Parameter		Min	Typ	Max	Units	Conditions
Operating Frequency		420		450	MHz	
DC Current			310	350	mA	
Insertion Loss			0.25	0.6	dB	
Isolation			50	55	dB	Between each Combiner
					dB	Input Ports
VSWR			1.13/1	1.25/1		30 - 400
			1.13/1	1.35/1		400 - 500
Impedance			50		OHMS	
Switching Speed			2	30	mSec	50% TTL to 90% / 10% RF
RF Power	*Operate*		100		W	AM
			125		W	FM
Operating Temperature					°C	TA

MODEL NUMBER CSF49110

Switchable Band Pass Filter

FEATURES

- 1300-2100 MHz
- 4 Bands
- 1.2 Max Insertion Loss
- 0.5 dB Flatness
- GPO Connectors

MFA

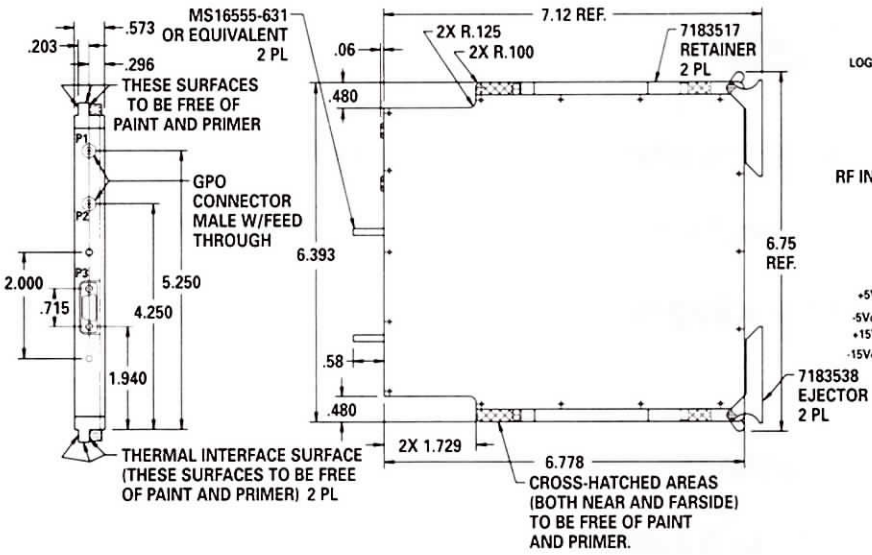

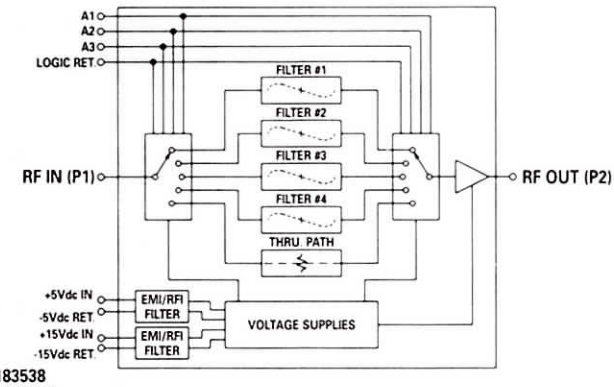

P3 CONNECTOR CHART	
PIN #	DES.
1	+5Vdc IN
2	-15Vdc RET
3	NC
4	NC
5	NC
6	LOGIC A2
7	LOGIC RET
8	LOGIC A1
9	+5Vdc RET
10	-15Vdc IN
11	NC
12	NC
13	NC
14	NC
15	LOGIC A3

GUARANTEED PERFORMANCE

Parameter	Min	Typ	Max	Units	Conditions
Operating Frequency	1300		2100	MHz	
DC Current		123	200	mA	At +5 VDC
		24	70	mA	At -15 VDC
Control Logic					3 Line TTL Control
Control Current			±10	µA	
Noise Figure			+15	dB	
Insertion Loss	-1.25	±0.1	+1.25	dB	
Insertion Loss vrs. Temp.	-1.25	±0.5	+1.25	dB	
VSWR			2.0/1		
Impedance		50		OHMS	
RF Power *Operate*			+10	dBm	
No Damage			+20	dBm	
Operating Temperature	-54	+25	+110	°C	TA

Microwave Integrated Circuit Switches

- GaAs, PIN Diode, & Schottky Diode Technology
- Thin-Film MIC Technology
- Plug In DIP Style Packages
- Flatpack Packages
- Connectorized Packages
- Full Military Screening Available
  (See Page 281)

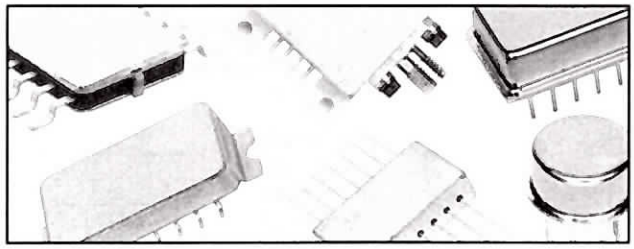

For additional products and information, please visit us at www.daico.com

Switches Specification Table

The MIC (Microwave Integrated Circuit) Switches are built utilizing Daico's in-house Hi-Rel Thin Film Technology, which provides excelent stability over temperature extremes. All switches are encased in shielded hermetic enclosures providing maximum protection to the circuitry with minimum RF leakage. The switches included drivers compatible with TTL or CMOS. Frequency ranges from DC - 12,000 MHz with isolation over 120 dB are available.

	Spec Freq MHz	Part Number	Switching Speed Microsec	Isolation dB Min/Typ	Insertion Loss dB Max/Typ	RF Power dBm	VSWR Max	DC Power Volts	DC Power mA	Control	Term	Package	Page
SPST													
	0.5-500	100C9099	0.035	90/75	7.0/1.7	+4	1.5	+1.5	70		50	SMA	*see website*
								-1	-70				
	5-400	DS0950	0.015	50/75	1.5/1.1	+10	1.4	+5	100	TTL	50	14 Pin DIP	83
	10-300	100C1041	0.015	50/75	1.5/1.1	+10	1.4	+5	100	TTL	50	SMA	91
GaAs	10-1000	DSW18033	0.035	60/75	1.7/1.0	+10	1.5	+5	7	TTL	50	14 Pin Flatpack	86
GaAs	10-1000	DPM08036	0.3	75/83	3.0/2.0	+14	1.3	+5	10	TTL	50	14 Pin Flatpack	87
	10-1500	CDS0671	1.4	50/70	2.0/.95	+20	1.5	+5	6	TTL	50	SMA	82
GaAs	20-1500	CDS0651	0.035	30/44	1.5/0.9	+10	1.5	+5	7	TTL	50	SMA	89
	20-2000	CDS0621	3	50/70	2.0/0.9	+17	1.3	+5	12	TTL	50	SMA	88
	240-2800	CSW18066	.3	65/88	2.0/1.5	+23	1.4	+5	15	TTL	50	9 Pin Flatpack	84
	400-2000	DS0551	0.4	50/67	1.5/1.1	+10	1.4	+5	40	TTL	50	9 Pin Flatpack	85
	750-1250	DSW16282	3	80/107	2.0/1.2	+17	1.5	+5	12	TTL	50	SMA	90
	2000-3100	DSW16285	1.4	50/70	2.0/.95	+20	1.5	+5	6	TTL	50	SMA	93
	8000-12000	DSW16186	0.05	60/70	1.8/1.4	+10	1.8	+5	50	TTL	50	SMA	92
								-15	10				
SP2T													
	DC-150	100C0350	3000	100/110	0.75/0.25	2.5W	1.4	6, 12, 18, 26			50	SMA	*see website*
	DC-450	100C0611	5000	45/62	0.6/0.3	20W	1.4	6, 12, 18, 26			50	SMA	*see website*
	DC-1250	100C1003	5000	45/85	1.0/0.1	30W	1.5	6, 12, 18, 26			50	See Dwg	126
GaAs	DC-2000	DS0702-R,-T	0.003	21/25	0.9/0.6	+23	1.2				50	8 Pin SMP	*see website*
GaAs	DC-2000	DS0813	0.2	25/50	1.5/0.7	+10	1.7	+5	5	TTL	Short	8 Pin TO-5	*see website*
								-5	5				
GaAs	DC-2000	DS0813-T	0.150	20/50	1.2/0.7	+10	1.7	+5	4	TTL	50	8 Pin TO-5	95
								-5	2				
GaAs	DC-2000	DS0850	0.003	25/68	1.0/0.4	+25	1.5			Driverless	Short	8 Pin TO-5	*see website*
GaAs	DC-2000	DS0850-T	0.003	20/50	1.2/0.7	+18	1.7			Driverless	50	8 Pin TO-5	96
GaAS	DC-2000	DSW21965	0.05	30/70	1.7/1.0	+10	1.5	+5	1	TTL	Open	8 Pin TO-5	97
								-5	1				
GaAs	DC-2000	DSW25038	0.005	35/40	2.0/1.5	+6	1.5	+5	25	TTL	Short	10 Pin SMP	113
								-5	20				
GaAs	DC-3000	DSW25251P	.005	20	1.40	+25	1.5	+5	-	TTL	-	8 Pin SMP	*see website*
								-5	-				
GaAs	DC-10,000	DSW25151	.005	18/25	3.0/1.5	-	2.1	+5	-	TTL	-	Micro-S	110
								-5	-				
GaAs	0.1-150	DSW26189	5	60/64	1.0/0.6	+18	1.5	+15	10	TTL	50	SMA	117
								-15	10				
GaAs	0.5-30	DSW26182	0.10	48/35	0.7/0.5	+23	1.5	+15	30	TTL	Open	SMA	*see website*
								-15	30				
	0.5-100	DSW21998	5	42/46	0.9/0.6	+25	1.2	+15	5	TTL	50	14 Pin DIP	109
								-15	5				
	1-30	DSW29029	40	60/80	0.6	+10	1.5	+5	40	TTL	50	SMA	*see website*
								+15	40				
	1-250	DS0880	40	65/86	1.4/0.8	+42	1.5	+5	10	TTL	50	14 Pin DIP	108
								+15	40				
								-15	40				
	2-32	100C1598	150	27/30	0.1/0.07	500W	1.2	+5	300	TTL	Open	N	125
								-50	-6				
	5-200	DS0492	20	40/66	0.8/0.5	+30	1.25	+5	30	TTL	50	14 Pin DIP	105
								+15	30				
GaAs	5-1000	DS0962	0.1	45/69	1.0/0.5	+13	1.4	+5	1	TTL	50	9 Pin Flatpack	115
GaAs	5-1000	DS0742	0.07	50/75	2.2/1.1	+10	1.4	+5	1	TTL	50	14 Pin SMP	*see website*

Switches Specification Table

	Spec Freq MHz	Part Number	Switching Speed Microsec	Isolation dB Min/Typ	Insertion Loss dB Max/Typ	RF Power dBm	VSWR Max	DC Power Volts	DC Power mA	Control	Term	Package	Page
SP2T													
GaAs	5-1500	DS0842	0.07	50/75	2.0/1.0	+15	1.4	+5	1	TTL	50	14 Pin DIP	*see website*
	5-2000	DS0613	3	50/70	1.7/0.7	+13	1.5	+15	35	TTL	Short	14 Pin DIP	107
GaAs	5-2000	DS0632	0.05	40/78	2.5/1.0	+7	1.5	+5	1	TTL	50	14Pin SMP	112
GaAs	5-2000	DSW28000	0.03	35/57	2.0/1.0	+17	1.9	+5	5	TTL	50	14 Pin Flatpack	116
GaAs	5-4000	DS0602	0.05	30/82	3.0/0.9	+7	2	+5	0.5	TTL	50	14 Pin Dip	99
GaAs	5-4000	CDS0882	0.035	35/79	3.2/1.0	+13	1.4	+5	3	TTL	50	SMA	*see website*
GaAs	10-1000	DS0860	0.07	25/55	1.5/0.7	+20	1.4	+5	1	TTL	50	8 Pin Flatpack	114
GaAs	10-1000	DS0812	0.07	25/64	1.25/0.5	+10	1.4	+5	5	TTL	50	12 Pin TO-8	98
GaAs	10-1000	DS0712	0.05	25/61	1.0/0.4	+13	1.4	+5	1	TTL	50	12 Pin SMP	111
	10-1000	DSW25112	40	25/47	1.5/.7	+24	2.0	+5	.2	TTL	50	6 Pin Flatpack	94
	10-2000	DS0052	1.0	30/82	2.2/0.6	+10	1.5	+5	25	TTL	50	14 Pin DIP	*see website*
	20-500	100C1592	10	55/75	0.75/0.3	20W	1.25	+5	300	TTL	Short	SMA	124
								-15	40				
GaAs	20-550	DSW22023	0.25	55/72	1.3/0.9	+5	1.3	+5	0.2	TTL	50	14 Pin DIP	100
	20-2000	DS0966-1	5	28/50	1.1/0.4	+25	1.3	+5	30	TTL	50	14 Pin DIP	106
								+12	10				
	20-2000	DS0612	10	30/58	2.3/1.3	+10	1.5	+5	3	TTL	50	14 Pin DIP	101
	20-2000	CDS0622	3	50/85	2.0/0.74	+17	1.3	+5	12	TTL	50	SMA	118
	20-4000	CDS0912	5	30/52	1.75/1.3	+13	1.5	+5	20	TTL	50	SMA	120
								-15	25				
	30-400	DSW22201	78	40/43	0.46/0.40	21	1.16			TTL	50	12 Pin TO-8	102
	100-1400	100C1032	10	40/60	0.5/0.3	20W	1.3	+5	160	TTL	Open	SMA, BNC, TNC	*see website*
								-5	160				
	100-500	100C1492	30	45/63	0.4/0.25	100W	1.25	+5	300	TTL	Short	N	123
								-50	10				
	200-900	DS0432	1.5	35/45	0.8/0.3	+35	1.25	+5	30	TTL	50	14 Pin DIP	104
								-15	30				
	225-440	CSW29289	5	45/76	0.35/0.27	5W	1.2	+24	21		50	SMA	127
	300-3000	CDS0667	0.5	50/80	2.0/1.3	+15	1.5	+5	20	TTL	50	SMA	119
	450-950	CSW22223	0.15	35/39	0.9/0.6	+18	1.4	+5	4	TTL	50	8 Pin TO-8	103
								-5	2				
	500-2500	DSW26176	10	75/50	1.5/1.2	+20	1.4	+5	50	TTL	50	SMA	121
	500-6000	CSW26252	2	40/62	1.1/0.43	+20	1.7	+5	150	TTL	50	SMA	*see website*
								-12	160				
	700-3000	CDS0979	0.1	55/61	1.2/0.8	+27	1.3	+5	25	TTL	50	SMA	122
								-15	15				
GaAs	3000-5000	DS0919	0.035	120/124	3.0/1.8	+7	2.0	+5	100	TTL	50	See Dwg	*see website*
	8000-12000	CSW26323	0.2	70/80	5.0/2.4	+10	2.0	+5	45	TTL	50	Hermetic	128

Switches Specification Table

	Spec Freq MHz	Part Number	Switching Speed Microsec	Isolation dB Min/Typ	Insertion Loss dB Max/Typ	RF Power dBm	VSWR Max	DC Power Volts	DC Power mA	Control	Term	Package	Page
SP3T													
	DC-150	100C0285	3000	100/108	0.5/0.3	2.5W	1.4	6, 12, 18, 26		-	50	SMA	*see website*
	DC-450	100C0612	5000	70/74	1.0/0.7	20W	1.4	6, 12, 18, 26		-	50	SMA	136
GaAs	DC-2050	DSW32096	0.075	45/56	2.0/1.4	+15	2.0	+5	5	TTL	Short	16 Pin DIP	130
								-5	5				
GaAs	0.1-2000	DSW36200	0.07	60/70	3/2	-15	1.5	+15	11	TTL	50	SMA	132
								-15	11				
GaAs	2-2500	DSW36177	10	50	3/2.2	+20	1.4	+15	30	TTL	50	SMA	135
								-15	30				
	2-2500	CSW36333	10	50/70	3/1.4	+20	1.5	+15	30	TTL	50	SMA	137
								-12.5	30				
GaAs	5-1000	DSW32025	0.1	50	2.0	-	2.0	+5	5	TTL	50	16 Pin DIP	129
								-5	2				
GaAs	5-2000	DS0997	0.05	35/65	2.75/1.3	+10	2.0	+5	1	TTL	50	16 Pin DIP	131
GaAs	10-1000	DSW38030	0.1	40/48	2.0/1.5	+23	1.4	+5	1	TTL	50	16 Pin Flatpack	*see website*
	20-2000	CDS0623	3	50/74	2.0/1.0	+15	1.3	+5	20	TTL	50	SMA	133
	50-500	DS0073	5	40/51	1.0/0.7	+10	1.25	+15	5	CMOS	50	24 Pin Plug-in	*see website*
	100-2000	CDS0669	0.5	65/87	2.0/0.7	+20	1.35	+5	30	TTL	50	SMA	134
SP4T													
	DC-450	100C0613	5	50/70	0.5/0.25	20W	1.25	6, 12, 18, 26		-	50	SMA	*see website*
	DC-500	100C0485	3	70/74	1.0/0.7	50W	1.6	6, 12, 18, 26		-	50	SMA	150
GaAs	DC-1000	DSW42044	0.075	30/70	3.5/1.7	+10	1.5	+5	10	TTL	50	14 Pin DIP	139
								-5	10				
	DC-2000	DSW48024	50	36/30	2.5/1.8	+13	1.7	+5	3	TTL	50	14 Pin Flatpack	142
								-5	5				
	DC-4000	DSW46174	0.1	54/50	3/2.2	+9.6	1.5	+5	10	TTL	50	SMA	147
								-5	10				
	0.1-150	DSW46190	0.5	60/65	1.4/1.2	+18	1.5	+15	20	TTL	50	SMA	144
								-15	20				
GaAs	1-1200	DSW46194	10	70/80	2.0/1.25	+15	1.25	+5	43	TTL	50	SMA	148
								-15	53				
	10-500	DS0545	35	25/55	0.8/0.6	+10	1.25	+15	12	CMOS	50	14 Pin DIP	138
	10-500	DS0085	35	25/60	0.8/0.5	+10	1.2	+15	6	CMOS	50	14 Pin DIP	*see website*
	10-1000	DS0644	3	50/88	1.25/0.6	+21	1.5	+5	23	TTL	50	24 Pin DIP	*see website*
	10-1000	DS0744	3	45/83	1.25/0.6	+21	1.5	+5	23	TTL	50	24 Pin SMP	141
	20-2000	DS0967	5	30/51	1.2/0.5	+25	1.4	+5	35	TTL	50	24 Pin DIP	140
								+12	20				
	20-2000	CDS0624	3	50/72	2.0/0.9	+15	1.3	+5	24	TTL	50	SMA	145
	20-2800	CSW48051	0.1	43/40	2.5/1	+20	1.4	+5	20	TTL	50	16 Pin Flatpack	143
	50-500	DS0778	1	45/62	1.4/1.0	+10	1.5	+5	15	TTL	50	24 Pin SMP	*see website*
								-12	15				
	50-650	DSW46218	0.1	80/75	1.5/1.14	+20	1.5	+15	15	TTL	50	SMA	151
								-15	5				
	830-930	DSW49068	1	70/71	2.0/1.23	+20	1.6	+5	30	TTL	50	SMA	149
								-5	30				
	100-2000	CDS0670	0.5	65/87	2.5/1.3	+20	1.35	+5	40	TTL	50	SMA	146

Switches Specification Table

	Spec Freq MHz	Part Number	Switching Speed Microsec	Isolation dB Min/Typ	Insertion Loss dB Max/Typ	RF Power dBm	VSWR Max	DC Power Volts	DC Power mA	Control	Term	Package	Page
SP5T													
	DC-450	100C0614	5000	50/70	0.6/0.35	20W	1.4	6, 12, 18, 26		-	50	SMA	158
	DC-1000	DSW52179	0.07	60/71	1.8/1.2	+13	1.3	+5	8	TTL	50	24 Pin DIP	154
								-5	2				
	1-2800	CSW52216	1	60/65	3	+13	1.4	+5	10	TTL	50	24 Pin DIP	155
								-5	10				
	1.5-30	CSWM9096	500	45/52	1.1/0.76	+30	1.5	+8	50	TTL	50	SMA	159
								-8	10				
	2-2500	DSW56178	0.1	50	3	+15	1.4	+15	50	TTL	50	SMA	157
								-15	50				
GaAs	10-400	DS0705	0.1	30/53	1.4/0.7	+20	1.3	+5	5	TTL	50	24 Pin SMP	156
	15-1000	100C1295	20	50/97	1.5/0.7	+22	1.5	+15	3	CMOS	50	SMA	*see website*
	20-300	DS0028	1	40/48	1.0/0.7	+13	1.3	+5	32	TTL	50	24 Pin DIP	152
								-5	40				
	20-600	100C1285	0.5	60/90	1.8/0.6	+13	1.35	+5	175	TTL	50	SMA	*see website*
	60-1500	DS0345	20	25/36	1.5/1.0	+10	1.3	+15	12	CMOS	Open	24 Pin DIP	153
SP6T													
	DC-450	100C0615	5000	45/67	1.0/0.45	20W	1.4	6, 12, 18, 26		-	50	SMA	164
	10-2000	DSW62188	.075	40/58	2.5/2	+18	1.6	+5	3	TTL	50	24 Pin DIP	161
								-5	5				
	15-1000	100C1296	50	50/95	1.8/1.2	+15	1.4	+15	25	CMOS	50	SMA	163
	20-600	100C1286	3	70/90	2.0/0.8	+13	1.35	+5	300	TTL	50	SMA	*see website*
	100-600	DS0506	1	50/56	1.0/0.6	+20	1.5	+5	35	TTL	50	38 Pin DIP	160
								-5	45				
	100-1000	DSW68034	1	45/53	1.5/0.8	+20	1.5	+5	35	TTL	50	38 Pin Flatpack	162
								-5	45				
SP7T													
	DC-200	100C1094	5000	50/53	0.5/0.35	25W	1.25	6, 12, 18, 26		-	50	SMA	*see website*
	10-2000	DSW72199	.075	40/58	2.5/2	+12	1.6	+5	3	TTL	50	24 Pin DIP	165
								-5	5				
	20-400	DS0137	100	40/60	1.5/0.9	+10	1.5	-	-	-	Open	16 Pin DIP	*see website*
	800-2050	DSW79177	.075	40/44	2.5/1.6	+12	2.0	+5	3	TTL	50	SMA	166
SP8T													
	DC-200	100C1159	5000	50/55	0.5/0.2	25W	1.25	6, 12, 18, 26		-	50	SMA	168
	20-160	CSW88050	0.3	50/58	2/0.7	+27	1.4	+5	10	TTL	50	Flatpack	*see website*
								-5	10				
	120-2800	CSW88064	0.1	30/40	2.8/1.8	+27	1.4	+5	10	TTL	50	Flatpack	*see website*
								-5	10				
	200-2000	DSW89048	0.3	45/70	3.5/1.7	+23	1.6	+5	70	TTL	50	SMA	167
								-12	60				
SP9T													
	150-2000	DSW96213	1	60/76	2.5/1.65	+20	1.5	+5	75	TTL	50	SMA	169
								-15	60				

Switches Specification Table

	Spec Freq MHz	Part Number	Switching Speed Microsec	Isolation dB Min/Typ	Insertion Loss dB Max/Typ	RF Power dBm	VSWR Max	DC Power Volts	DC Power mA	Control	Term	Package	Page
SP10T													
	10-1500	DS0820	5	35/46	2.0/0.95	+13	1.5	+5	35	TTL	50	38 Pin DIP	170
SP11T													
	500-6000	DSWM5077	0.4	30/34	4.5/3.5	+7	2.0	+5	100	TTL	Short	20 PIN SMP	*see website*
								-5	35				
SP16T													
GaAs	DC-4000	DS0918	3	20/54	7.0/3.0	+10	2.0	+5	10	TTL	50	58 Pin DIP	171
								-15	25				
DP2T													
	3-200	DSW22206	1	38/45	1.4/1.06	+13	1.5	+5	132	-	50	Small DIP	173
	20-700	DS0519	3	35/42	0.7/0.6	+20	1.35	+5	10	TTL		12 Pin TO-8	172
TRANSFER													
	DC-400	100C0347	3000	55/62	0.5/0.3	20W	1.4	6, 12, 18, 26		-	-	See Dwg	177
GaAs	5-1000	DSWT1981	0.05	50/56	1.5/0.9	+15	1.5	+5	6	TTL	-	24 Pin Plug-In	*see website*
								-5	2				
	5-1000	DSWT2180	0.1	40	1.7	+13	1.3	+5	20	TTL	Short	24 Pin DIP	174
	15-300	DS0097	10	50/60	1.0/0.5	+10	1.25	+5	20	CMOS	-	24 Pin Plug-In	*see website*
	15-1000	100C1297	20	35/70	1.2/0.5	+15	1.5	+15	20	CMOS	-	SMA	176
	20-600	100C1287	1	55/82	0.8/0.6	+15	1.25	+5	80	TTL	-	SMA	*see website*
	70-1000	DS0319	10	40/60	1.5/1.2	+10	1.3	+15	15	CMOS	-	18 Pin DIP	175

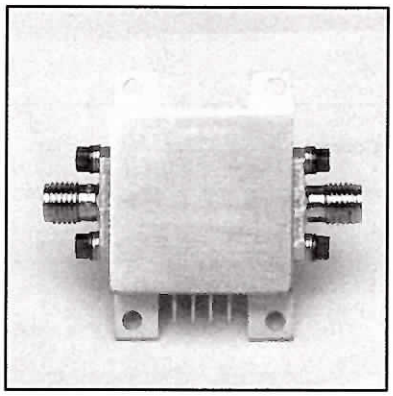

MODEL NUMBER CDS0671

GaAs SPST

FEATURES

- 10-1500 MHz
- 8 nSec Transition Time
- 20 nSec Switching Speed
- 2 mA, +5 VDC
- TTL Driver
- Non-Reflective
- Replaceable SMA Connectors

SPST

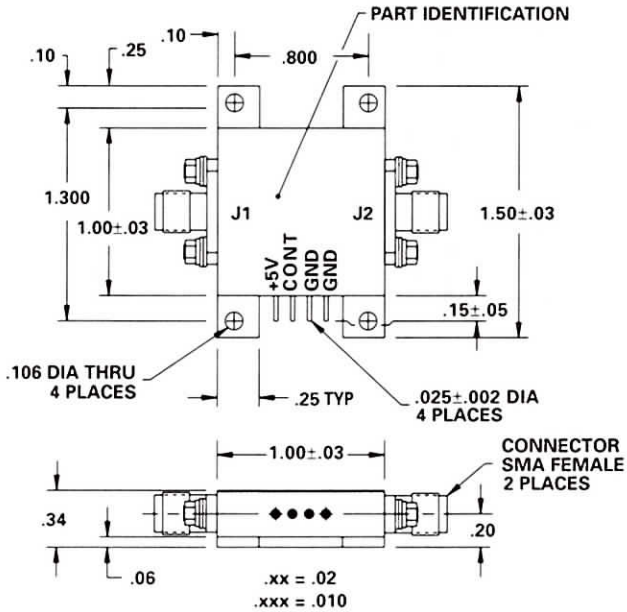

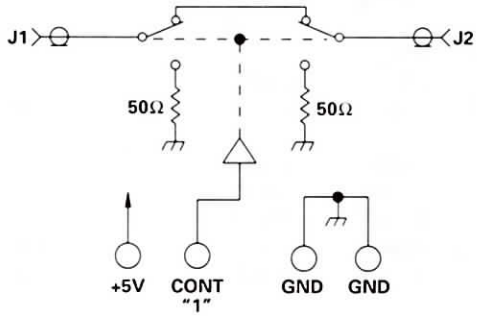

TYPICAL PERFORMANCE
at 25°C

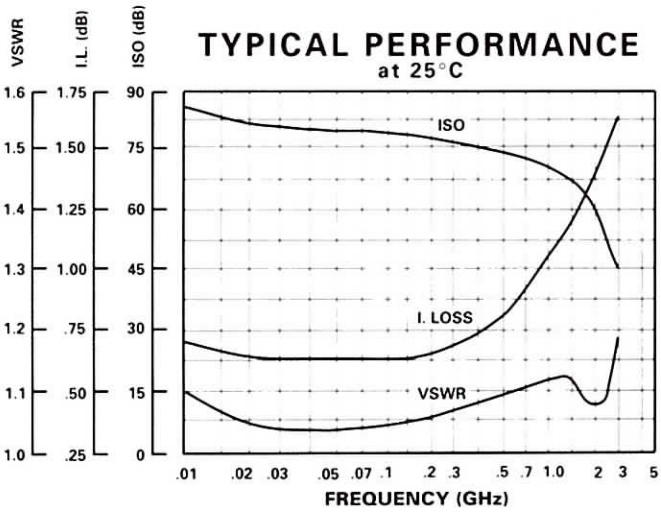

GUARANTEED PERFORMANCE

Parameter		Min	Typ	Max	Units	Conditions
Operating Frequency		20		2000	MHz	
DC Current			6.0	12	mA	At +5 VDC Supply
Control Type			TTL			1 Line Logic "0" = Isolation Logic "1" = Thru
Control Current	*High*		0	±10	µA	VIH = +2.7V
	Low		0	±10	µA	VIL = +0.5V
Insertion Loss			0.95	1.5	dB	20 - 1000 MHz
			1.30	2.0	dB	1000 - 2000 MHz
Isolation		60	70		dB	20 - 1000 MHz
		50	60		dB	1000 - 2000 MHz
VSWR			1.15/1	1.30/1		
	Termination		1.15/1	1.50/1		
Impedance			50		OHMS	
Switching Speed			1.4	3.0	µSEC	50% TTL to 90% / 10% RF
Transition (Rise/Fall) Time			0.3		µSEC	90% / 10% or 10% / 90% RF
Switching Transients			400			Peak Value
Intercept Points	*2nd*		+70		dBm	50 MHz / 70 MHz
	3rd		+38		dBm	50 MHz / 35 MHz
RF Power	*Operate*		+15	+10	dBm	20 - 100 MHz
			+20	+17	dBm	100 - 2000 MHz
	No Damage			+27	dBm	
Operating Temperature		-55	+25	+125	°C	TA

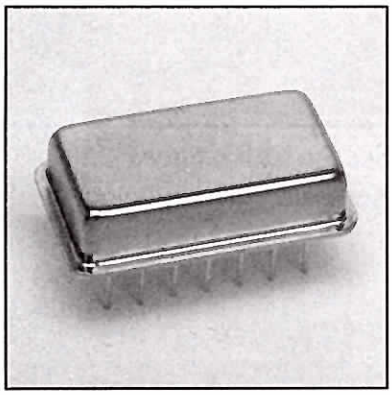

MODEL NUMBER DS0950

Schottky Diode SPST

FEATURES

- 5 - 400 MHz
- 3 nSec 10%/90% RF Transition
- 9 nSec Switching Speed
- 60 dB Isolation
- TTL Driver
- Non-Reflective
- 14 Pin DIP

SPST

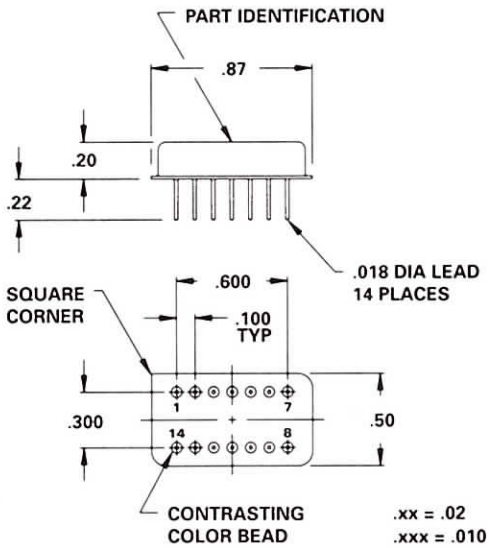

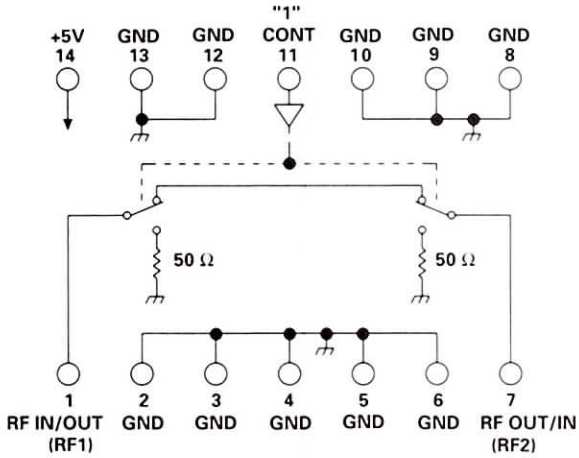

TYPICAL PERFORMANCE

at 25°C

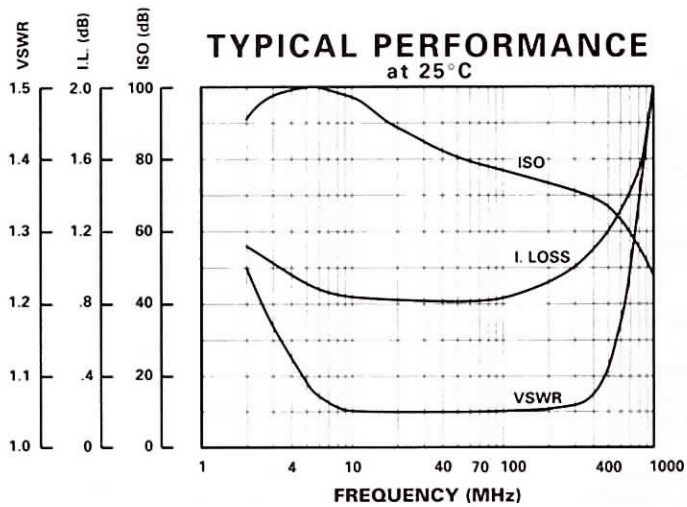

GUARANTEED PERFORMANCE

Parameter		Min	Typ	Max	Units	Conditions
Operating Frequency		5		400	MHz	
DC Current			62	100	mA	at +5 VDC Supply
Control Type			TTL			1 Line Logic "0"= Isolation Logic "1"= THRU
Control Current	*High*		0	±20	µA	VIH = +2.7V
	Low		0	±20	µA	VIL = +0.5V
Insertion Loss			0.9	1.2	dB	5 - 100 MHz
			1.1	1.5	dB	100 - 400 MHz
Isolation		60	80		dB	5 - 100 MHz
		50	65		dB	100 - 400 MHz
VSWR	*Thru*		1.2/1	1.4/1		
	Termination		1.2/1	1.5/1		
Impedance			50		OHMS	
Switching Speed			9	15	nSEC	50% TTL to 90% / 10% RF
Transition (Rise/Fall) Time			3	7	nSEC	90% / 10% or 10% / 90% RF
Switching (Video) Transients			35	50	mV	Peak Value
Intercept Points	*2nd*		+80		dBm	70 MHz / 50 MHz
	3rd		+35		dBm	35 MHz / 50 MHz
RF Power	*Operate*		+12	+10	dBm	0.1 dB Compression
	No Damage			+20	dBm	
Operating Temperature		-55	+25	+85	°C	TA

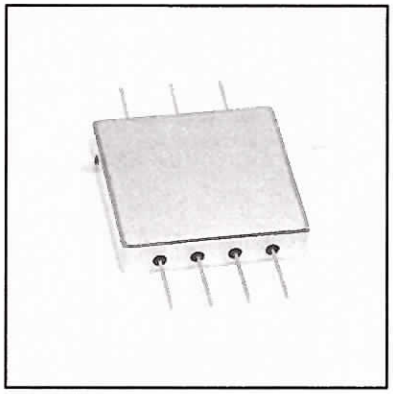

MODEL NUMBER CSW18066

Switch SPST

FEATURES

- 240-2800 MHz
- Flat Pack
- 88 db Isolation
- 300 nSec Switching Speed
- +44 dBm 3rd Order Intercept Point

SPST

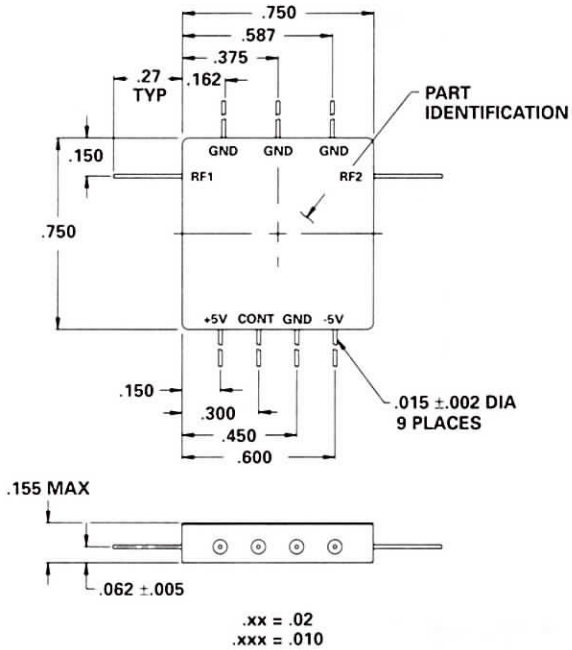

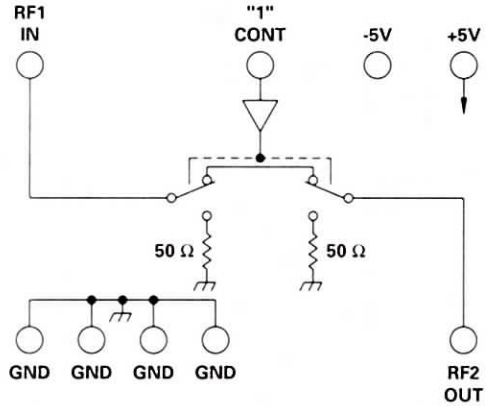

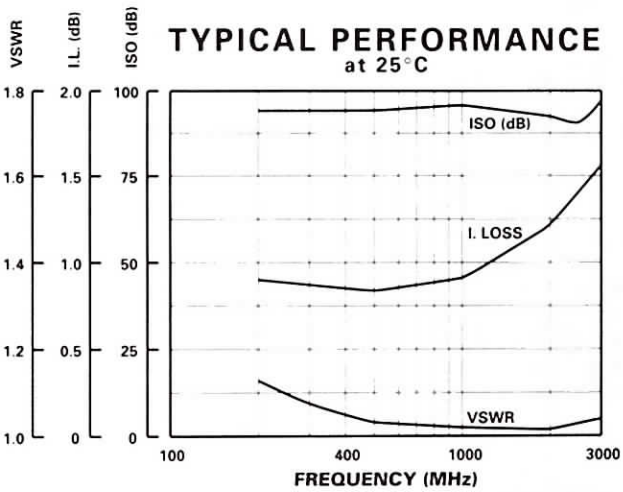

GUARANTEED PERFORMANCE

Parameter		Min	Typ	Max	Units	Conditions
Operating Frequency		240		2800	MHz	
DC Current			9.1	15	mA	At +5 VDC Supply
			0	3	mA	At -5 VDC Supply
Control Type			TTL			1 Line Logic "0" = Isolation Logic "1" = Thru
Control Current	*High*		±1.0	±10	µA	VIH = +2.7 V
	Low		±1.0	±10	µA	VIL = +0.5 V
Insertion Loss			1.5	2.0	dB	
Isolation		65	88		dB	
VSWR	*Thru*		1.07/1	1.4/1		
	Termination		1.07/1	1.4/1		
Impedance			50		OHMS	
Switching Speed			127	300	nSec	50% TTL to 90% / 10% RF
Switching (Video) Transients			450		mV	Peak Value
Intercept Points	*2nd*	+60	+63		dBm	
	3rd	+30	+44		dBm	
RF Power	*Operate*		+23	0	dBm	0.1 dB Compression
	No Damage			+30	dBm	
Operating Temperature		-20	+25	+70	°C	TA
Storage Temperature		-45		+85	°C	TA

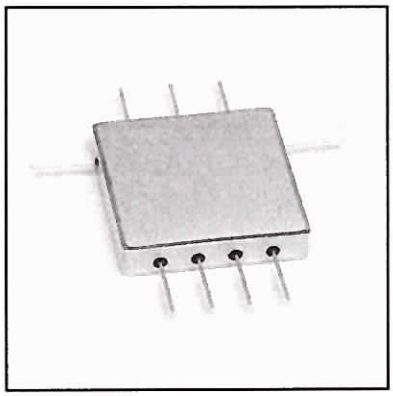

MODEL NUMBER DS0551

PIN Diode SPST

FEATURES

- 400-2000 MHz
- 0.9 dB Insertion Loss
- 60 dB Isolation
- TTL Driver
- Non-Reflective
- .750 Sq. Flat Pack

SPST

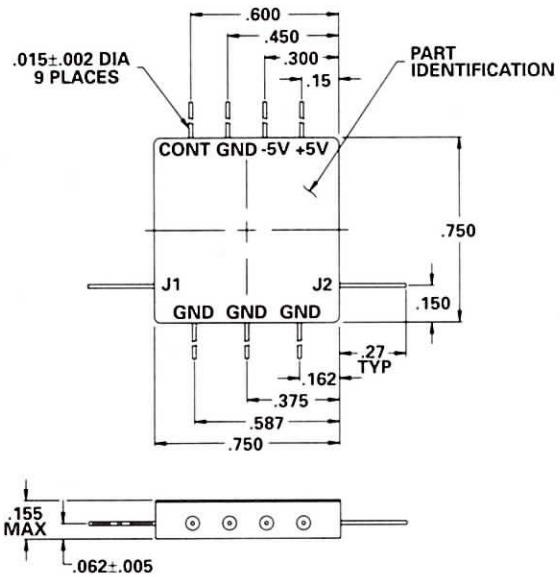

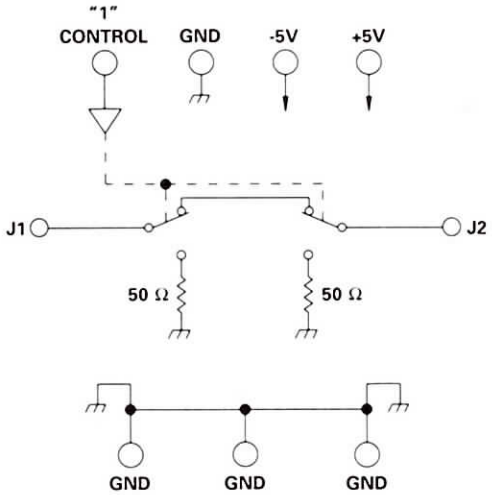

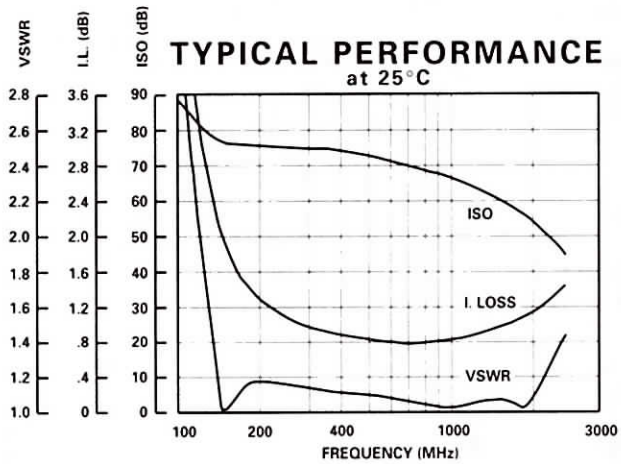

GUARANTEED PERFORMANCE

Parameter		Min	Typ	Max	Units	Conditions
Operating Frequency		400		2000	MHz	
DC Current			29	40	mA	At +5 VDC Supply
			23	35	mA	At -5 VDC Supply
Control Type			TTL			1 Line Logic "0" = Isolation Logic "1" = Thru
Control Current	*High*		0	+80	µA	VIH = +2.7V
	Low		-250	-800	µA	VIL = +0.5V
Insertion Loss			1.1	1.5	dB	
Isolation		60	67		dB	400 - 1000 MHz
		50	56		dB	1000 - 2000 MHz
VSWR	*Thru*		1.2/1	1.4/1		
	Termination		1.1/1	1.4/1		
Impedance			50		OHMS	
Switching Speed			185	400	nSEC	50% TTL to 90% / 10% RF
Transition (Rise/Fall) Time			115		nSEC	90% / 10% or 10% / 90% RF
Switching (Video) Transients			280		mV	Peak Value
Intercept Points	*2nd*		+59		dBm	1595 MHz / 1095 MHz
	3rd		+39		dBm	1195 MHz / 1895 MHz
RF Power	*Operate*		+17	+10	dBm	0.1 dB Compression
	No Damage			+30	dBm	
Operating Temperature		-55	+25	+125	°C	TA

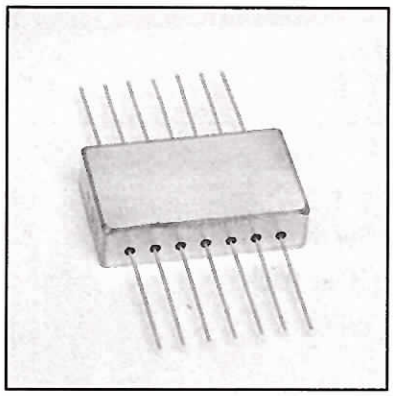

MODEL NUMBER DSW18033

GaAs SPST

FEATURES

- 10-1000 MHz
- High Isolation
- 15 nSec Switching Speed
- Non-Reflective
- TTL Driver
- 14 Pin Flatpack

SPST

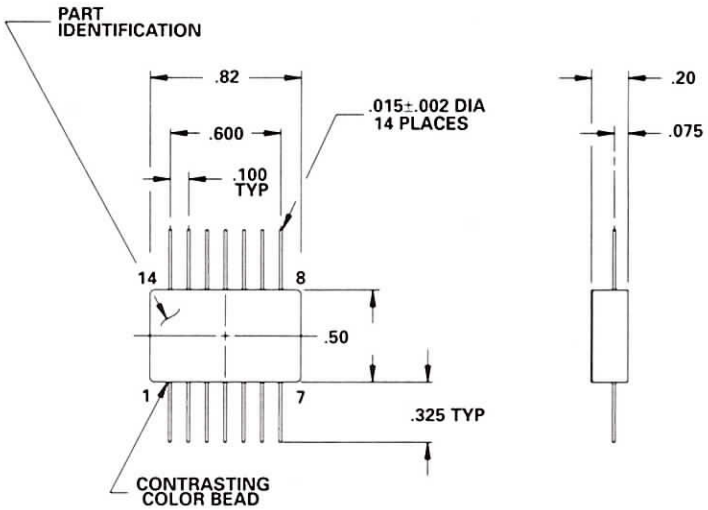

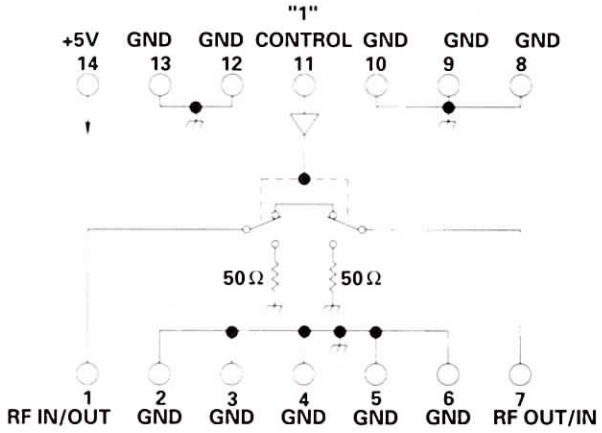

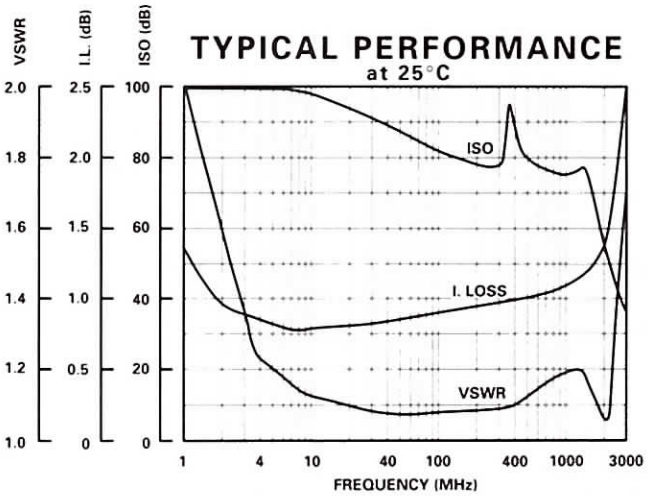

GUARANTEED PERFORMANCE

Parameter		Min	Typ	Max	Units	Conditions
Operating Frequency		10		1000	MHz	
DC Current			2	7	mA	AT +5 VDC Supply
Control Type			TTL			1 Line Logic "1"= ON Logic "0"= OFF
Control Current:	*High*		1	50	µA	VIH = +2.0V
	Low		1	-500	µA	VIL = +0.8V
Insertion Loss			1.0	1.7	dB	
Isolation		60	75		dB	
VSWR	*Thru*		1.15/1	1.5/1		
	Termination		1.15/1	1.5/1		
Impedance			50		OHMS	
Switching Speed			15	35	nSEC	50% TTL to 10% / 90% RF
Transition (Rise/Fall) Time			8		nSEC	10% / 90% or 90% / 10% RF
Switching (Video) Transients			40		mV	Peak Value
Intercept Points	*2nd*		+88		dBm	70 / 50 MHz
	3rd	+40	+44		dBm	35 / 50 MHz
RF Power	*Operate*		+12	+10	dBm	0.1 dB Compression
	No Damage			+30	dBm	
Operating Temperature		-40	+25	+90	°C	TA

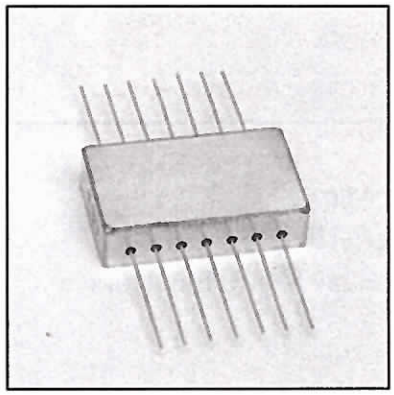

MODEL NUMBER DPM08036

Pulse Modulator

FEATURES

- 10-1000 MHz
- Very Low Transients
- 215 nSec Switching Speed
- 7.7 mA @ +5 VDC
- 14 Pin Flatpack

PSMD

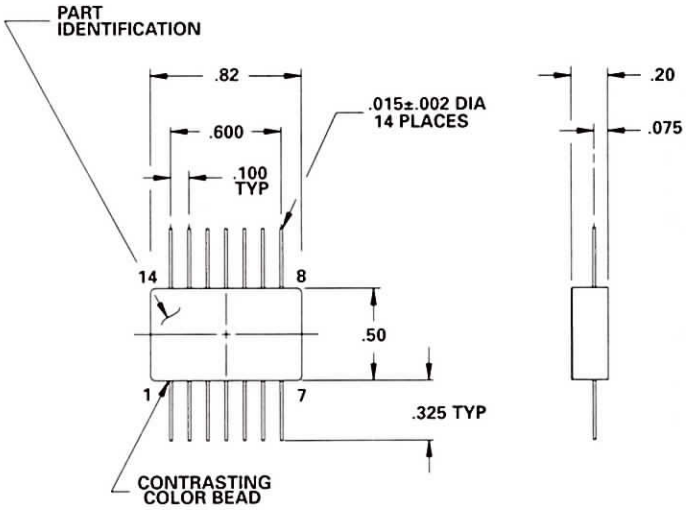

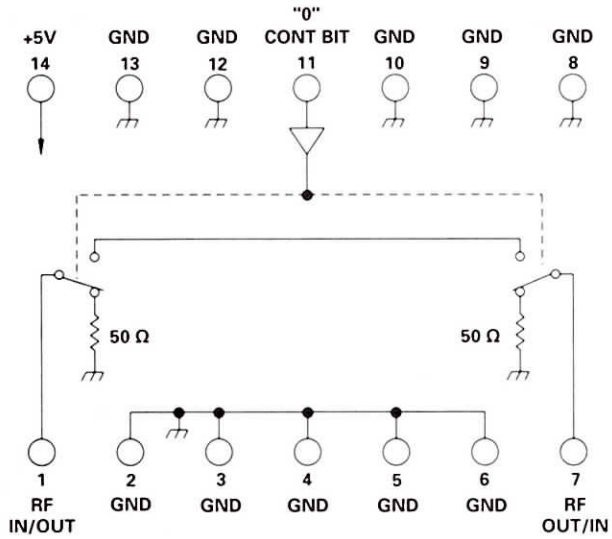

TYPICAL PERFORMANCE at 25°C

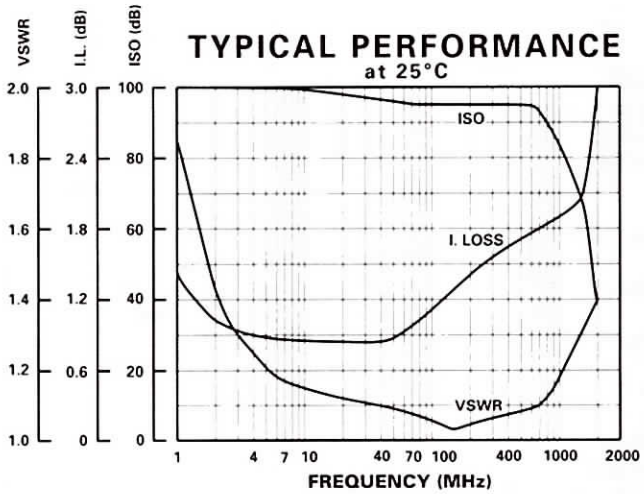

GUARANTEED PERFORMANCE

Parameter		Min	Typ	Max	Units	Conditions
Operating Frequency		10		1000	MHz	
DC Current			7.7	10	mA	At +5 VDC Supply
Control Type			TTL			1 Line, 1=Thru
Control Current:	*High*		0	50	µA	VIH = +2.0V
	Low		0	-500	µA	VIL = +0.8V
Insertion Loss			2.0	3.0	dB	
Isolation		75	83		dB	
VSWR:	*Thru*		1.10/1	1.3/1		
	Termination		1.05/1	1.5/1		
Impedance			50		OHMS	
Switching Speed			215	300	nSEC	50% TTL to 10% / 90% RF
Transition (Rise/Fall) Time			45	200	nSEC	90% / 10% or 10% / 90% RF
In Band Transients				100		Control Signal PRF Range 22 Hz To 334 KHz Minimum Pulse Width 1.0 µ Sec
			-60	-37	dBm	DC-50 MHz
			-84	-57	dBm	50-96 MHz
			-93	-85	dBm	In Band
Intercept Points	*2nd*	+60	+73		dBm	
	3rd	+40	+44		dBm	
RF Power	*Operate*		+19	+14	dBm	0.1 dB Compression
			+22	+20	dBm	1.0 dB Compression
	No Damage			+30	dBm	
Operating Temperature		-40	+25	+90	°C	TA

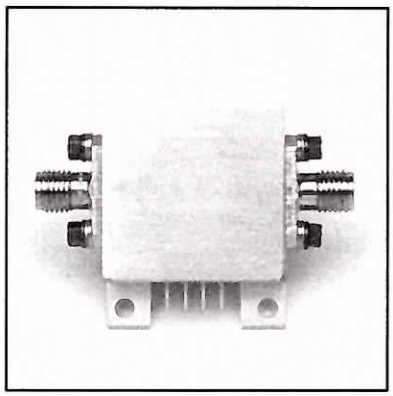

MODEL NUMBER CDS0621

Pin Diode SPST

FEATURES

- 20-2000 MHz
- 6 mA, +5 VDC
- 70 dB Isolation
- TTL Driver
- Non-Reflective
- Replaceable SMA Connectors

SPST

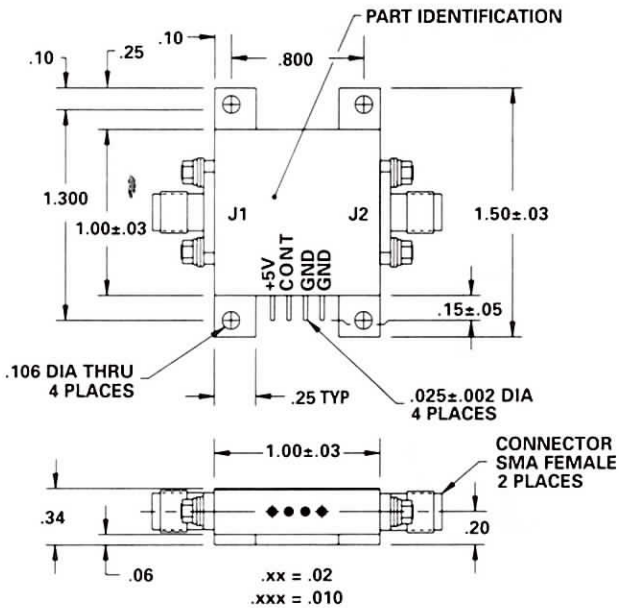

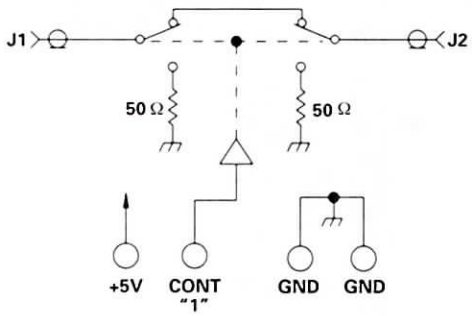

TYPICAL PERFORMANCE
at 25°C

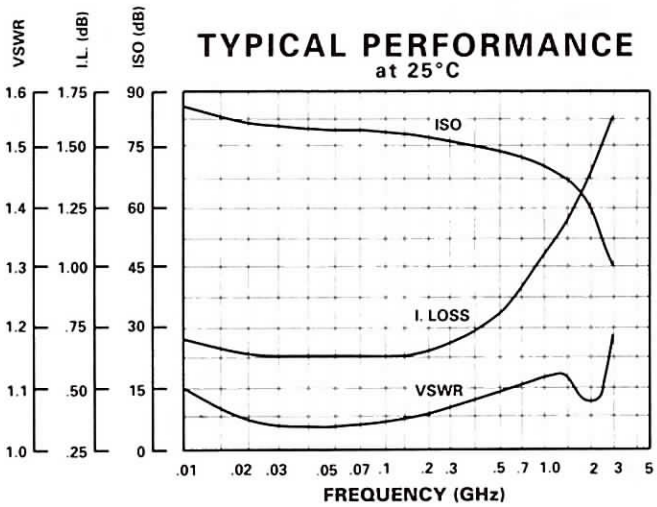

GUARANTEED PERFORMANCE

Parameter		Min	Typ	Max	Units	Conditions
Operating Frequency		20		2000	MHz	
DC Current			6.0	12	mA	At +5 VDC Supply
Control Type			TTL			1 Line Logic "0" = Isolation Logic "1" = Thru
Control Current	*High*		0	±10	µA	VIH = +2.7V
	Low		0	±10	µA	VIL = +0.5V
Insertion Loss			0.95	1.5	dB	20 - 1000 MHz
			1.30	2.0	dB	1000 - 2000 MHz
Isolation		60	70		dB	20 - 1000 MHz
		50	60		dB	1000 - 2000 MHz
VSWR			1.15/1	1.30/1		
	Termination		1.15/1	1.50/1		
Impedance			50		OHMS	
Switching Speed			1.4	3.0	µSEC	50% TTL to 90% / 10% RF
Transition (Rise/Fall) Time			0.3		µSEC	90% / 10% or 10% / 90% RF
Switching Transients			400		mV	Peak Value
Intercept Points	*2nd*		+70		dBm	50 MHz / 70 MHz
	3rd		+38		dBm	50 MHz / 35 MHz
RF Power	*Operate*		+15	+10	dBm	20 - 100 MHz
			+20	+17	dBm	100 - 2000 MHz
	No Damage			+27	dBm	
Operating Temperature		-55	+25	+125	°C	TA

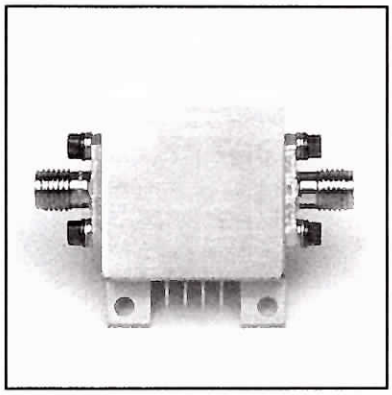

MODEL NUMBER CDS0651

GaAs SPST

FEATURES

- 20-1500 MHz
- 11 nSec Transition Time
- 23 nSec Switching Speed
- 3.5 mA, +5 VDC
- Replaceable SMA Connectors
- TTL Driver
- Non-Reflective
- See DS0699 & DS0690 For TO-8 & 14 Pin DIP Versions

SPST

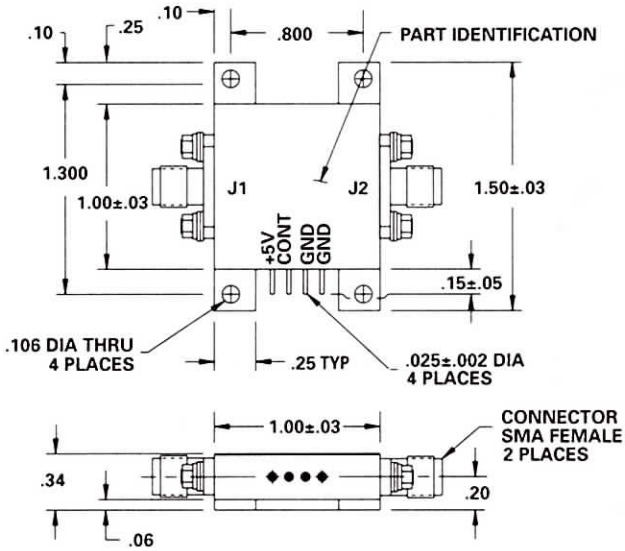

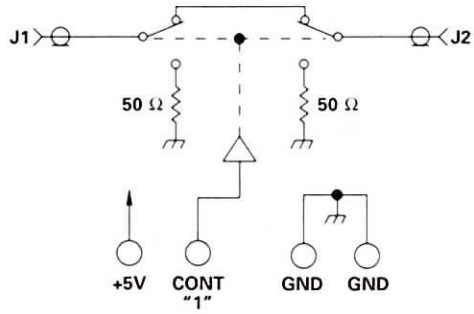

TYPICAL PERFORMANCE
at 25°C

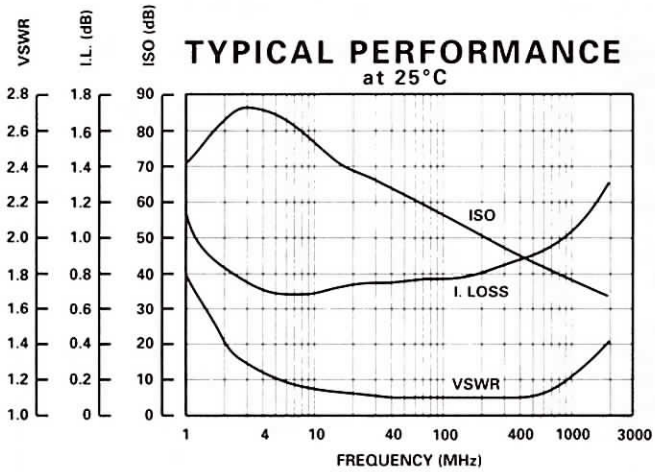

GUARANTEED PERFORMANCE

Parameter		Min	Typ	Max	Units	Conditions
Operating Frequency		10		1500	MHz	
DC Current			3.5	7	mA	At +5 VDC Supply
Control Type			TTL			1 Line
						Logic "1" = Thru
Control Current	*High*		0	±20	µA	VIH = +3.0V
	Low		0	±20	µA	VIL = +0.5V
Insertion Loss			0.9	1.2	dB	10 - 500 MHz
			1.1	1.5	dB	500 - 1500 MHz
Isolation		40	44		dB	10 - 500 MHz
		30	34		dB	500 - 1500 MHz
VSWR	*Thru*		1.1/1	1.3/1		10 - 500 MHz
			1.25/1	1.5/1		500 - 1500 MHz
	Termination		1.4/1	1.7/1		10 - 1500 MHz
Impedance			50		OHMS	
Switching Speed			23	35	nSEC	50% TTL to 90% / 10% RF
Transition (Rise/Fall) Time			11		nSEC	10% / 90% or 90% / 10% RF
Switching (Video) Transients			21	35	mV	Peak Value
Intercept Points	*2nd*		+54		dBm	70 MHz / 50 MHz
	3rd		+37		dBm	35 MHz / 50 MHz
RF Power	*Operate*		+12	+10	dBm	
	No Damage			+27	dBm	
Operating Temperature		-55	+25	+125	°C	TA

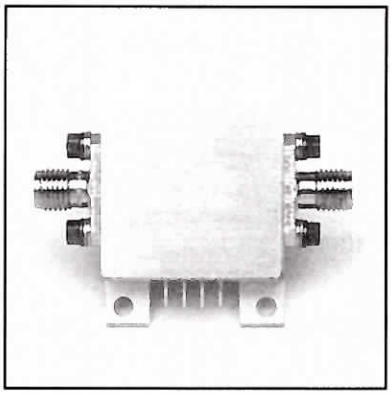

MODEL NUMBER DSW16282

Switch SPST

FEATURES

- 750-1250 MHz
- SMA Connectorized
- Ultra High Isolation, 107 dB Typical
- High Intercept Performance
- 6.4 mA @ +5 VDC

SPST

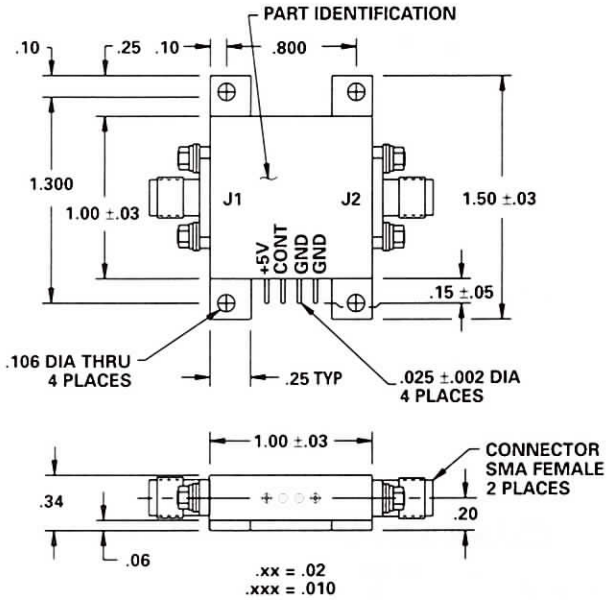

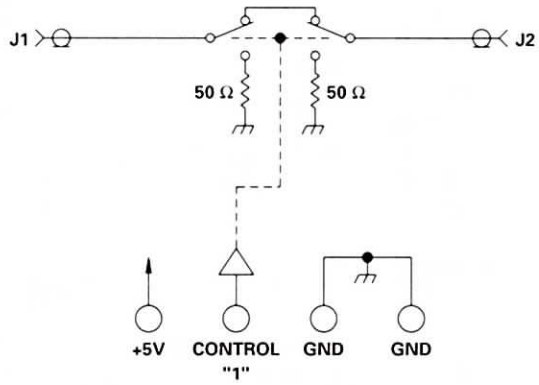

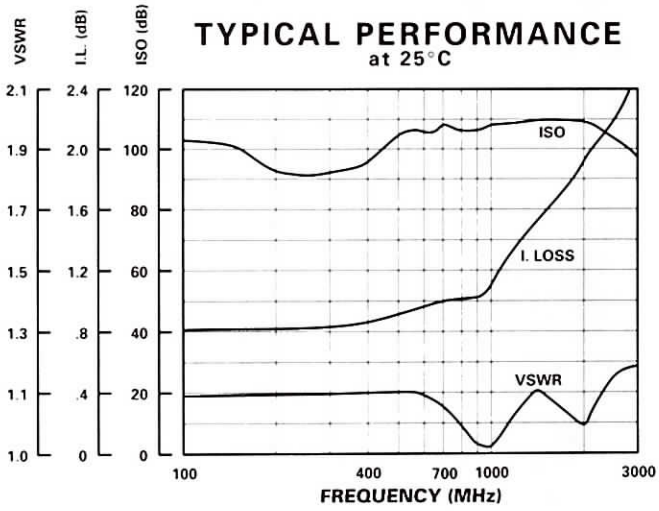

GUARANTEED PERFORMANCE

Parameter		Min	Typ	Max	Units	Conditions
Operating Frequency		750		1250	MHz	
DC Current			6.4	12	mA	At +5 VDC Supply
Control Type			TTL			Logic "1" = Thru
Control Current	*High*		0	±10	µA	VIH = +2.7 V
	Low		0	±10	µA	VIL = +0.5 V
Insertion Loss			1.2	1.5	dB	750 - 1000 MHz
			1.3	2.0	dB	1000 - 1250 MHz
Isolation		80	107		dB	
VSWR	*Thru*		1.12/1	1.3/1		
	Termination		1.08/1	1.5/1		
Impedance			50		OHMS	
Switching Speed			.2	3.0	µSec	50% TTL - 90% / 10% RF
Transition (Rise/Fall) Time			.015		µSec	10%/90% or 90%/10% RF
Switching (Video) Transients			40.0		mV	Peak Value
Intercept Points	*2nd*		+70		dBm	750 / 350 MHz
	3rd		+50		dBm	375 / 350 MHz
RF Power	*Operate*		+24	+17	dBm	0.1 dB Compression
	No Damage			+27	dBm	At 750 MHz
Operating Temperature		-20	+25	+50	°C	TA

MODEL NUMBER 100C1041	Schottky Diode SPST

FEATURES

- 5-300 MHz
- 3 nSec 10%/90% RF Transition
- 9 nSec Switching Speed
- 60 dB Isolation
- TTL Driver
- Non-Reflective

SPST

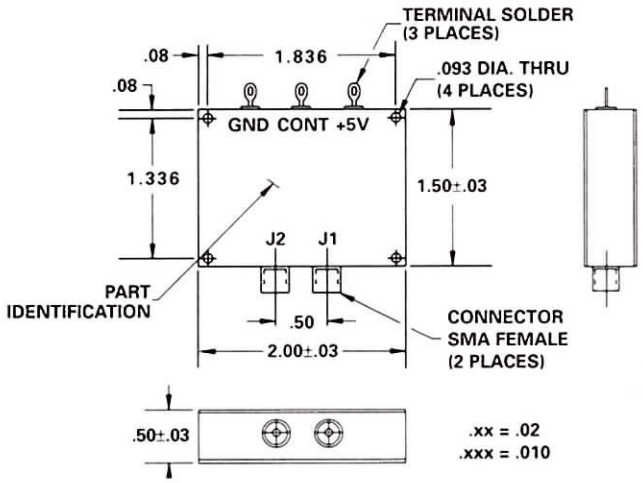

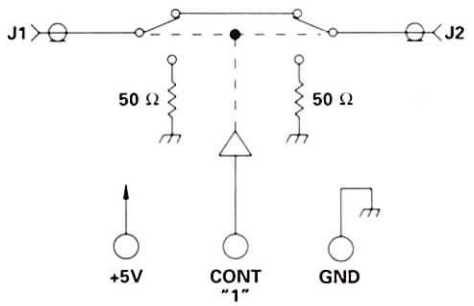

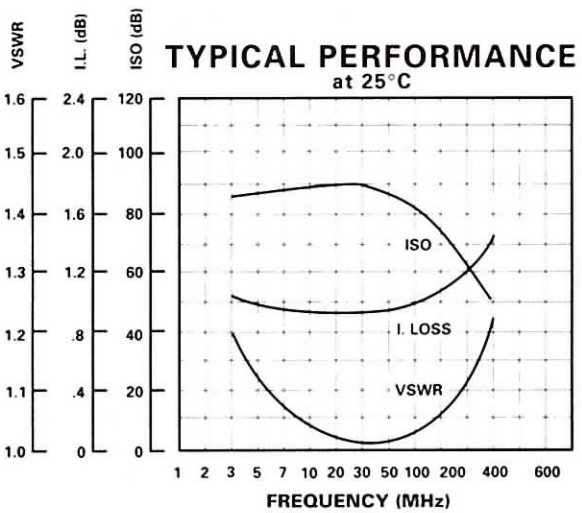

GUARANTEED PERFORMANCE

Parameter		Min	Typ	Max	Units	Conditions
Operating Frequency		5		300	MHz	
DC Current			62	100	mA	At +5 VDC Supply
Control Type			TTL			1 Line Logic "0" = Isolation Logic "1" = Thru
Control Current	*High*		0	±20	µA	VIH = +2.7V
	Low		0	±20	µA	VIL = +0.5V
Insertion Loss			0.9	1.2	dB	5 - 100 MHz
			1.1	1.5	dB	100 - 300 MHz
Isolation		60	75		dB	5 - 100 MHz
		50	63		dB	100 - 300 MHz
VSWR	*Thru*		1.2/1	1.4/1		
	Termination		1.2/1	1.5/1		
Impedance			50		OHMS	
Switching Speed			9	25	nSEC	50% TTL to 90% / 10% RF
Transition (Rise/Fall) Time			3	7	nSEC	90% / 10% or 10% / 90% RF
Switching (Video) Transients			26	35	mV	Peak Value
Intercept Points	*2nd*		+80		dBm	70 MHz / 50 MHz
	3rd		+32		dBm	35 MHz / 50 MHz
RF Power	*Operate*		+12	+10	dBm	0.1 dB Compression
	No Damage			+20	dBm	
Operating Temperature		-55	+25	+125	°C	TA

MODEL NUMBER DSW16186	PIN Diode SPST

FEATURES

- 8 - 12 GHz
- 70 dB Isolation
- 1.4 dB Insertion Loss
- 30 nSec Switching Speed
- TTL Control
- Replaceable SMA Connectors

SPST

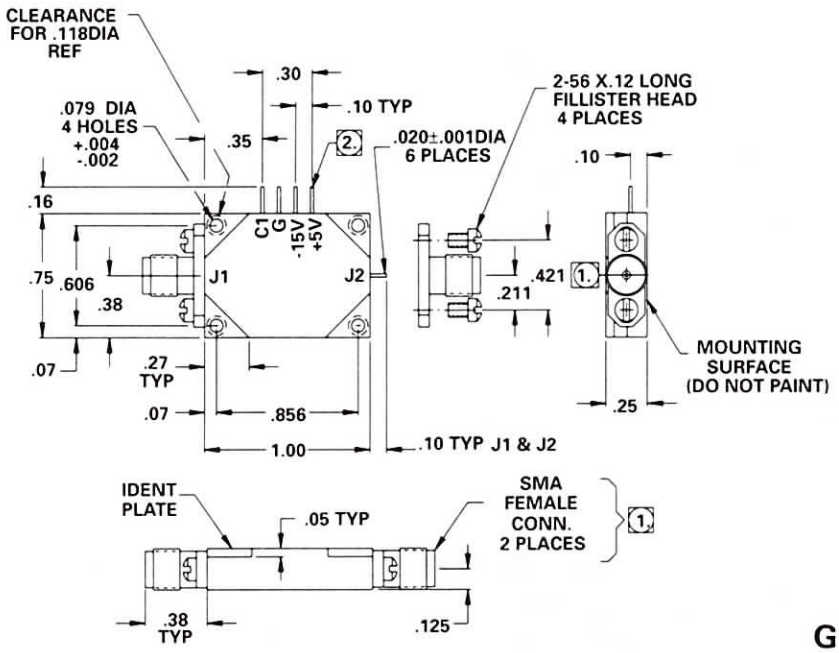

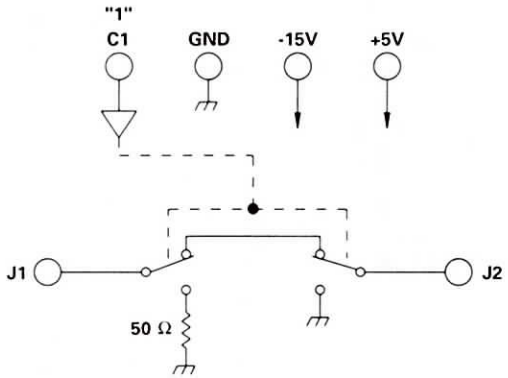

TYPICAL PERFORMANCE

at 25°C

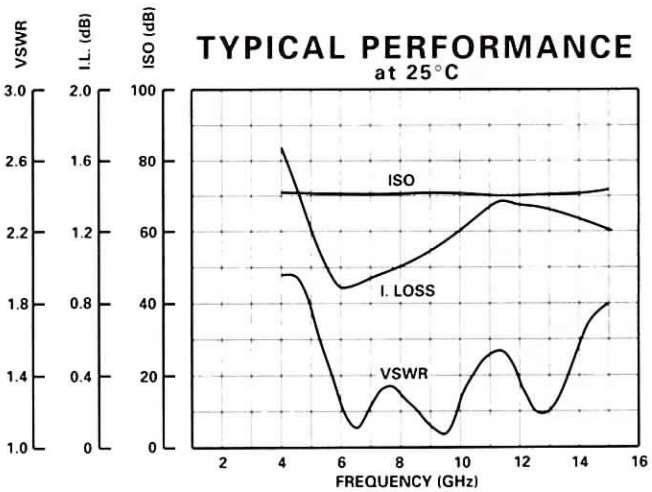

GUARANTEED PERFORMANCE

Parameter		Min	Typ	Max	Units	Conditions
Operating Frequency		8		12	GHz	
DC Current			30	50	mA	At +5 VDC Supply
			8	10	mA	At -15 VDC Supply
Control Type			TTL			1 Line Logic "1"= Low Loss
Control Current	*High*		0	40	µA	VIH = +2.7V
	Low		0	-1.6	mA	VIL = +0.5V
Insertion Loss			1.4	1.8	dB	
Isolation		60	70		dB	
VSWR	*Thru*		1.5/1	1.8/1		
	Termination		1.6/1	1.8/1		J1 Port
Impedance			50		OHMS	
Switching Speed			30	50	nSEC	50% TTL to 90% / 10% RF
Transition (Rise/Fall) Time			20	50	nSEC	10% / 90% or 90% / 10% RF
Switching (Video) Transients			700		mV	Peak Value
RF Power	*Operate*			+23	dBm	
	Peak			+40	dBm	≤ 3 MicroSec
Operating Temperature		-54	+25	+95	°C	TA

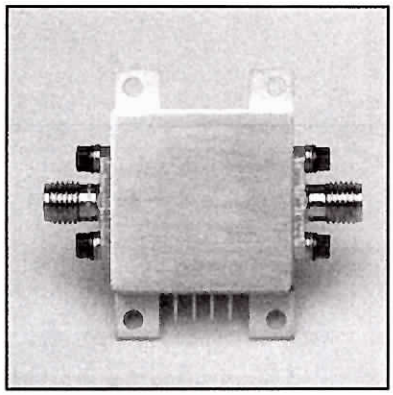

MODEL NUMBER DSW16285

SPST Switch

FEATURES

- 2.5-3.1 GHz
- 15W CW Power Handling
- 700 nSec Switching Speed
- 0.5 dB Insertion Loss

SPST

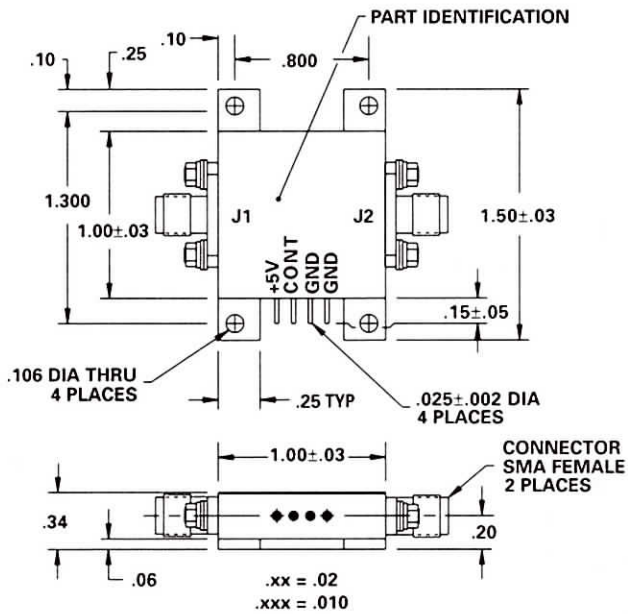

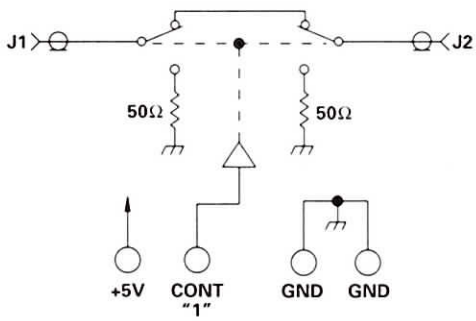

TYPICAL PERFORMANCE
at 25°C

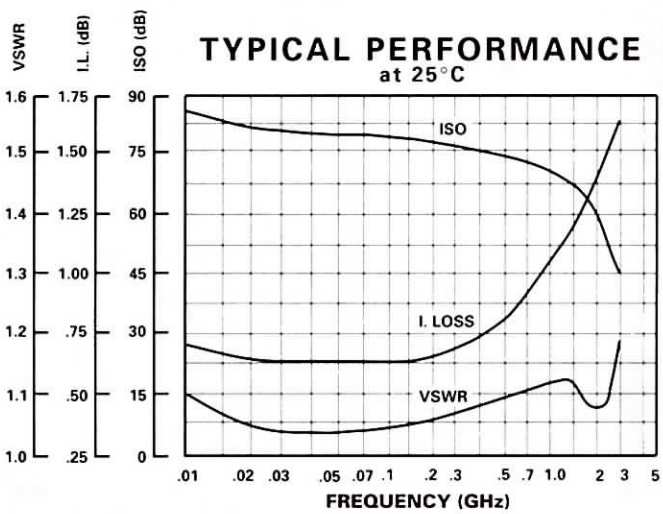

GUARANTEED PERFORMANCE

Parameter		Min	Typ	Max	Units	Conditions
Operating Frequency		20		2000	MHz	
DC Current			6.0	12	mA	At +5 VDC Supply
Control Type			TTL			1 Line Logic "0" = Isolation Logic "1" = Thru
Control Current	*High*		0	±10	µA	VIH = +2.7V
	Low		0	±10	µA	VIL = +0.5V
Insertion Loss			0.95	1.5	dB	20 - 1000 MHz
			1.30	2.0	dB	1000 - 2000 MHz
Isolation		60	70		dB	20 - 1000 MHz
		50	60		dB	1000 - 2000 MHz
VSWR			1.15/1	1.30/1		
	Termination		1.15/1	1.50/1		
Impedance			50		OHMS	
Switching Speed			1.4	3.0	µSEC	50% TTL to 90% / 10% RF
Transition (Rise/Fall) Time			0.3		µSEC	90% / 10% or 10% / 90% RF
Switching Transients			400			Peak Value
Intercept Points	*2nd*		+70		dBm	50 MHz / 70 MHz
	3rd		+38		dBm	50 MHz / 35 MHz
RF Power	*Operate*		+15	+10	dBm	20 - 100 MHz
			+20	+17	dBm	100 - 2000 MHz
	No Damage			+27	dBm	
Operating Temperature		-55	+25	+125	°C	TA

DAICO Industries

310.507.3242 • FAX 310.507.5701 • www.daico.com

MODEL NUMBER DSW25112	SP2T Switch

FEATURES

- 10-1000 MHz
- 40 nSec Switching Speed
- 1 mA max DC Current
- 0.38" x 0.38" Square Package

SP2T

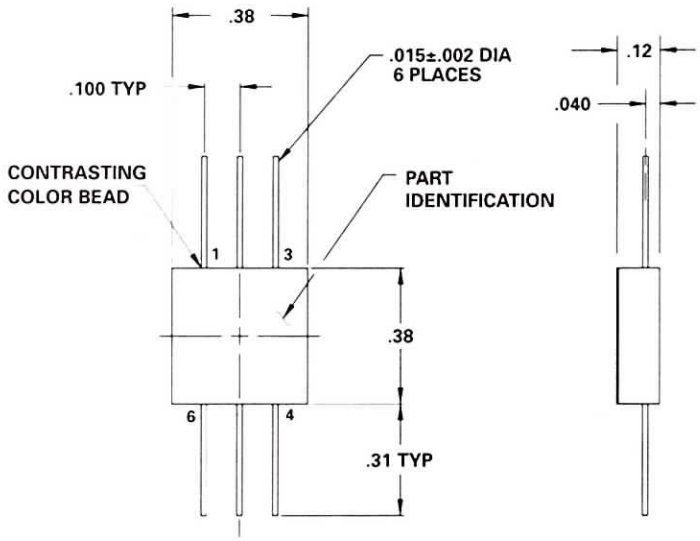

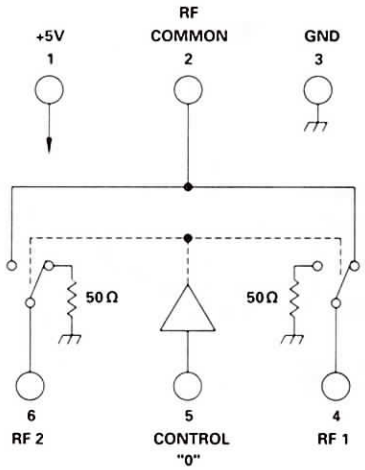

TYPICAL PERFORMANCE

AT 25ºC

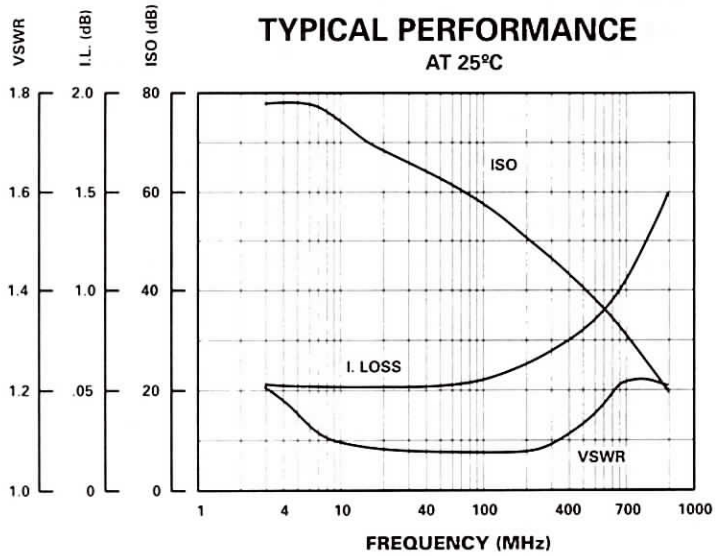

GUARANTEED PERFORMANCE

Parameter		Min	Typ	Max	Units	Conditions
Operating Frequency		10		1000	MHz	
DC Current			.2	1	mA	At +5 VDC Supply
Control Type			TTL			"0" = RF Com to RF 1
Control Current	*high*		0	±20	µA	VIH = +2.7V
	low		0	±20	µA	VIL = +0.5V
Insertion Loss			.7	1.0	dB	10 - 150 MHz
			1.1	1.5	dB	150 - 1000 MHz
Isolation		50	55		dB	10 - 150 MHz
		40	47		dB	150 - 300 MHz
		25	32		dB	300 - 1000 MHz
VSWR	*Thru*		1.2/1	1.4/1		
	Termination		1.4/1	2/1		
Impedance			50		OHMS	
Switching Speed			40	70	nSec	50% TTL - 90% / 10% RF
Transition Time			15		nSec	90% / 10% or 10% / 90% RF
Switching (Video) Transients			48		mV	Peak Value
Intercept Points	*2nd*		+88		dBm	70/50 MHz
	3rd		+47		dBm	35/50 MHz
RF Power	*Operate*		+16	+10	dBm	0.1 dB Comp. 10 - 100 MHz
			+24	+20	dBm	100 - 1000 MHz
	Maximum			+27	dBm	No Damage
Operating Temperature		-45		+55	°C	TA

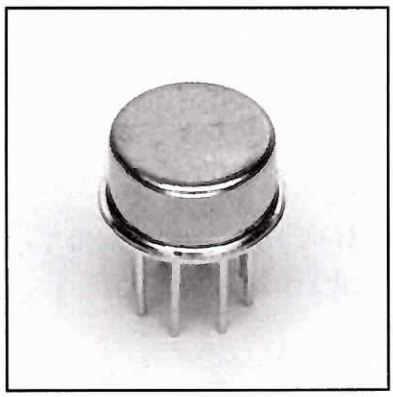

MODEL NUMBER DS0813-T

GaAs SP2T

FEATURES

- DC-2000 MHz
- < 2 mA, ±5 VDC
- 27 nSec Transition Time
- Ultra Small TO-5 Package
- Non-Reflective
- TTL Driver
- See DS0850-T For Driverless Version
- Low Cost

SP2T

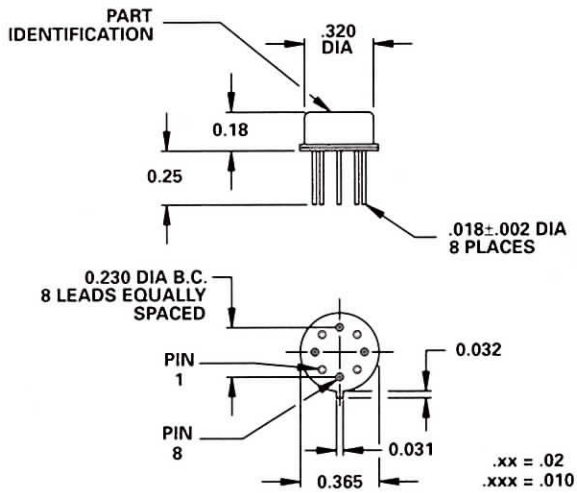

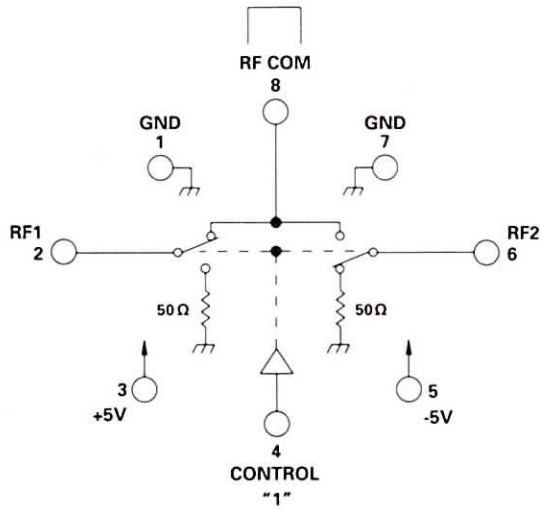

TYPICAL PERFORMANCE at 25°C

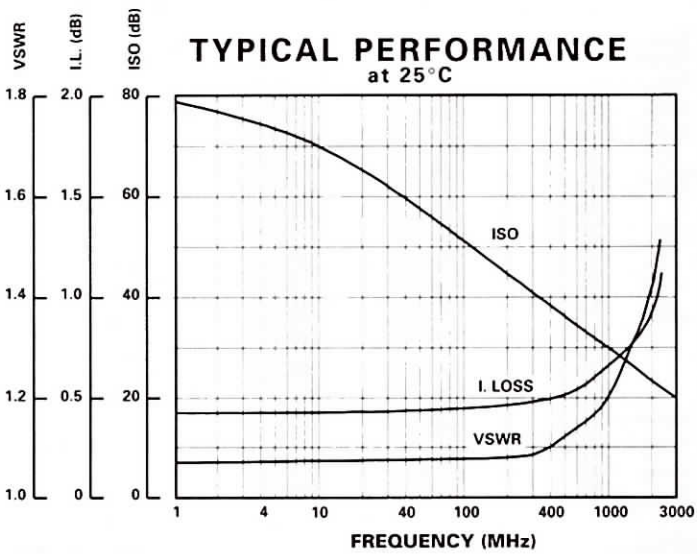

GUARANTEED PERFORMANCE

Parameter		Min	Typ	Max	Units	Conditions
Operating Frequency		DC		2000	MHz	
DC Current			2	4	mA	At +5 VDC Supply
			1	2	mA	At -5 VDC Supply
Control Type			TTL			1 Line
						Logic "0" = RF Com to RF 2
						Logic "1" = RF Com to RF 1
Control Current	*High*		1	±40	µA	VIH = +2.7V
	Low		1	±40	µA	VIL = +0.5V
Insertion Loss			0.7	0.9	dB	DC - 500 MHz
			0.9	1.2	dB	500 - 2000 MHz
Isolation		40	50		dB	DC - 100 MHz
		30	36		dB	100 - 500 MHz
		20	24		dB	500 - 2000 MHz
VSWR	*Thru*		1.1/1	1.3/1		DC - 500 MHz
			1.5/1	1.7/1		500 - 2000 MHz
	Termination		1.1/1	1.3/1		DC - 500 MHz
			1.5/1	1.7/1		500 - 2000 MHz
Impedance			50		OHMS	
Switching Speed			65	150	nSEC	50% TTL to 90% / 10% RF
Transition (Rise/Fall) Time			27		nSEC	90% / 10% or 10% / 90% RF
Switching (Video) Transients			8		mV	Peak Value
Intercept Points	*2nd*		+85		dBm	214 MHz / 127 MHz
	3rd		+47		dBm	107 MHz / 127 MHz
RF Power	*Operate*		+12	+10	dBm	0.1 dB Comp. Above 20 MHz
	No Damage			+30	dBm	
Operating Temperature		-55	+25	+125	°C	TA

DAICO Industries

310.507.3242 • FAX 310.507.5701 • www.daico.com

MODEL NUMBER DS0850-T

GaAs SP2T

FEATURES

- DC-2000 MHz
- 3 nSec Transition Time
- Non-Reflective
- Ultra Small TO-5 Package
- Low Cost
- See DS0813-T For Version With Integrated TTL Driver

SP2T

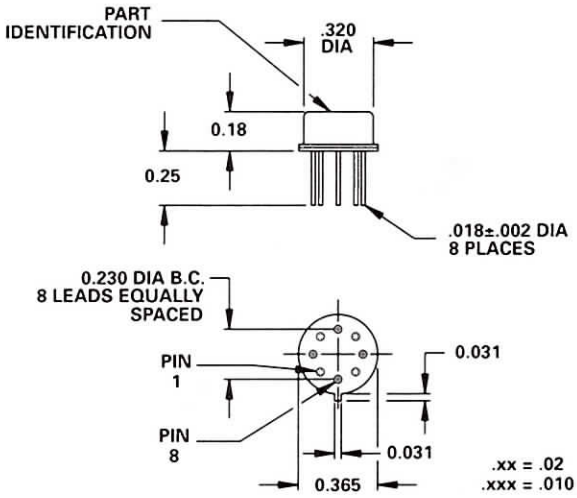

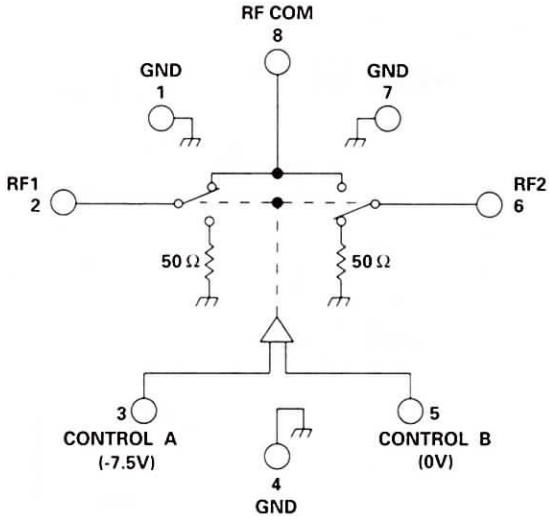

TYPICAL PERFORMANCE

at 25°C

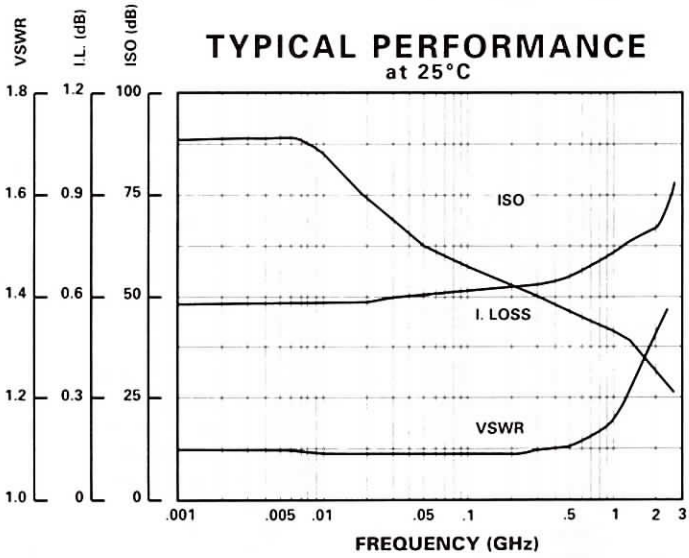

GUARANTEED PERFORMANCE

Parameter		Min	Typ	Max	Units	Conditions
Operating Frequency		DC		2000	MHz	
Control Type						See Logic Table
Control Current	*High*		10	-200	µA	VIH = -7.0V
	Low		4	+20	µA	VIL = +0V
Insertion Loss			0.7	0.9	dB	DC - 500 MHz
			0.9	1.2	dB	500 - 2000 MHz
Isolation		40	50		dB	DC - 100 MHz
		30	36		dB	100 - 500 MHz
		20	24		dB	500 - 2000 MHz
VSWR	*Thru*		1.1/1	1.3/1		DC - 500 MHz
			1.5/1	1.7/1		500 - 2000 MHz
	Termination		1.1/1	1.3/1		DC - 500 MHz
			1.5/1	1.7/1		500 - 2000 MHz
Impedance			50		OHMS	
Transition (Rise/Fall) Time			3	10	nSEC	90% / 10% or 10% / 90% RF
Switching (Video) Transients			20		mV	
Intercept Points	*2nd*		+68		dBm	70 MHz / 50 MHz
	3rd		+41		dBm	35 MHz / 50 MHz
RF Power	*Operate*		+22	+18	dBm	0.1 dB Comp. Above 100 MHz
	No Damage			+30	dBm	
Operating Temperature		-55	+25	+125	°C	TA

LOGIC TABLE

CONT A	CONT B	RF COM TO:
-7.5V	0V	RF1
0V	-7.5V	RF2

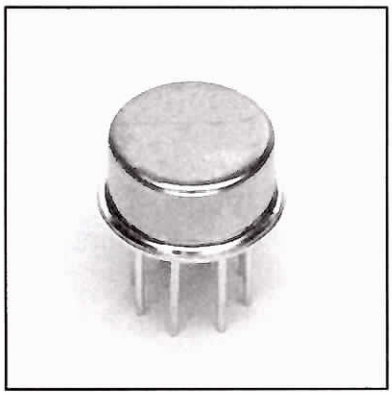

MODEL NUMBER DSW21965

GaAs SP2T

FEATURES

- DC - 2000 MHz
- < 1 mA, ±5 VDC
- 17 nSec Switching Speed
- High Isolation
- TTL Driver
- Ultra Small TO-5 Package

SP2T

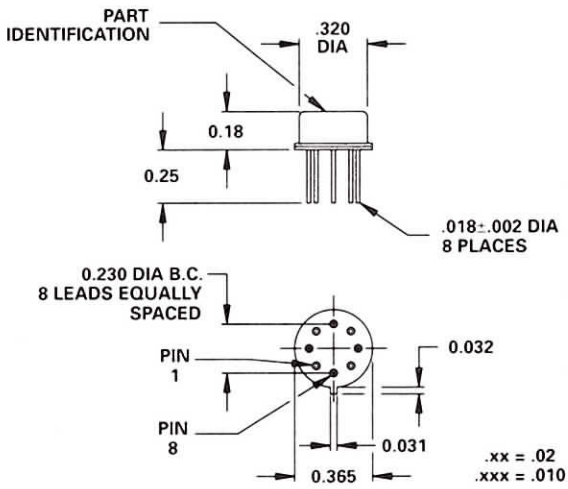

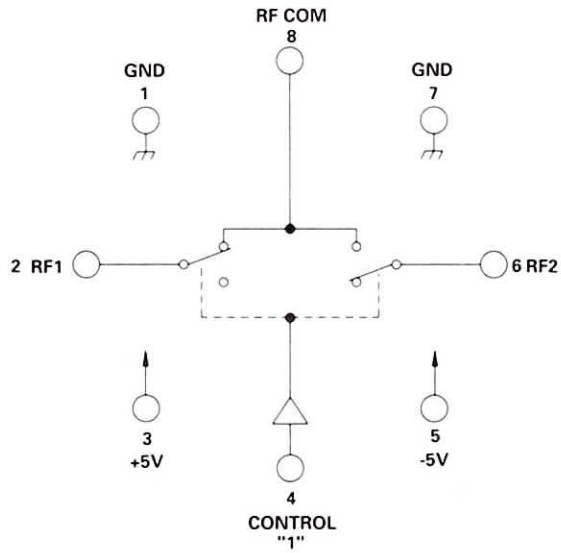

TYPICAL PERFORMANCE

at 25°C

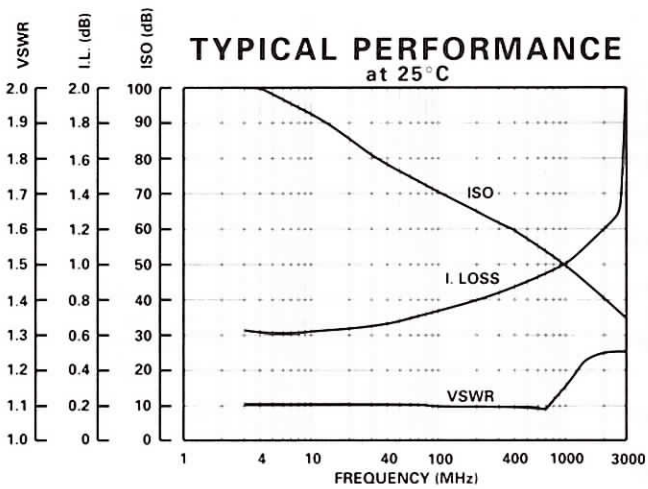

LOGIC TABLE	
TTL Control	RF Com To:
1	RF1
0	RF2

GUARANTEED PERFORMANCE

Parameter		Min	Typ	Max	Units	Conditions
Operating Frequency		DC		2000	MHz	
DC Current			0.3	1	mA	AT +5 VDC Supply
			0.01	1	mA	AT -5 VDC Supply
Control Type			TTL			1 Line
						Logic "0"= RF COM to RF 2
						Logic "1"= RF COM to RF 1
Control Current	*High*		1	±40	µA	VIH = +2.7V
	Low		1	±40	µA	VIL = +0.5V
Insertion Loss			1.0	1.5	dB	DC - 1000 MHz
			1.2	1.7	dB	1000 - 2000 MHz
Isolation		60	70		dB	DC - 100 MHz
		50	58		dB	100 - 500 MHz
		30	42		dB	500 - 2000 MHz
VSWR			1.15/1	1.2/1		DC - 500 MHz
			1.25/1	1.5/1		500 - 2000 MHz
Impedance			50		OHMS	
Switching Speed			17	150	nSEC	50% TTL to 90% / 10% RF
Transition (Rise/Fall) Time			4		nSEC	10% / 90% or 90% / 10% RF
Switching (Video) Transients			20		mV	Peak Value
Intercept Points	*2nd*		+80		dBm	70 MHz / 50 MHz
	3rd		+43		dBm	35 MHz / 50 MHz
RF Power	*Operate*		+12	+10	dBm	0.1 dB Comp. Above 20 MHz
	No Damage			+30	dBm	
Operating Temperature		-55	+25	+125	°C	TA

DAICO Industries

310.507.3242 • FAX 310.507.5701 • www.daico.com

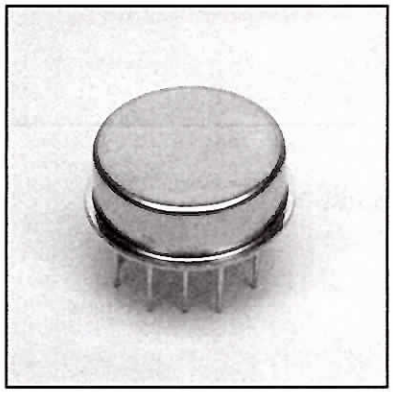

MODEL NUMBER DS0812

GaAs SP2T

FEATURES

- 10-1000 MHz
- 3 mA, +5 VDC
- Non-Reflective
- TTL Driver
- Small TO-8 Package
- See DS0712 For Surface Mount Version
- Low Cost

SP2T

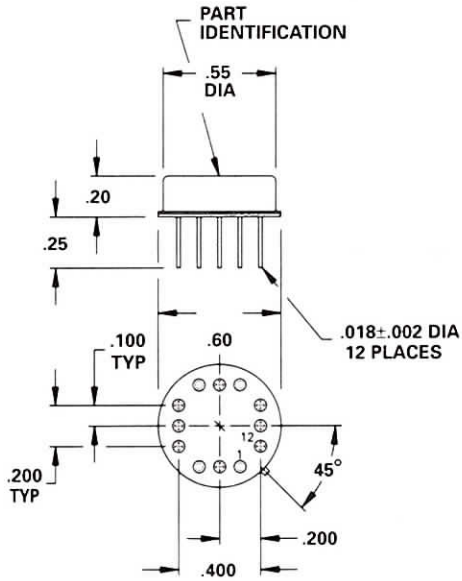

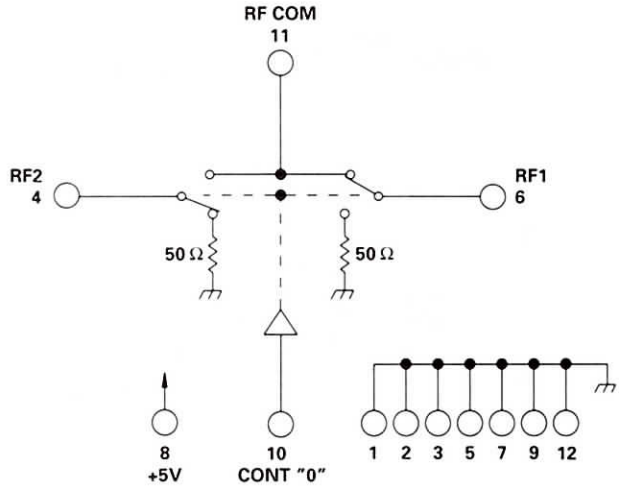

TYPICAL PERFORMANCE at 25°C

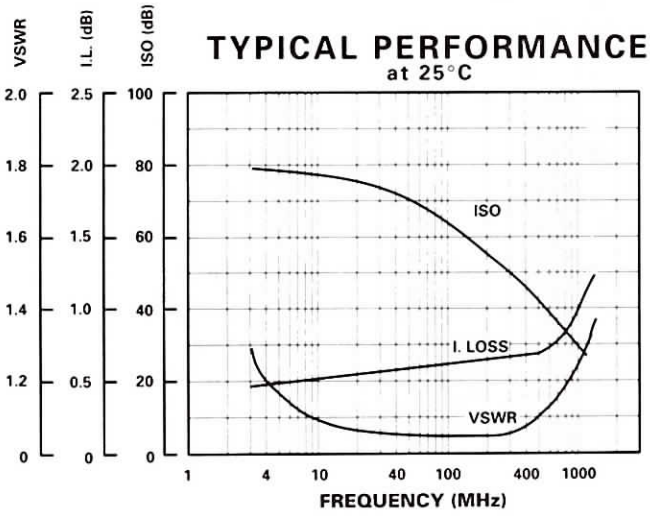

GUARANTEED PERFORMANCE

Parameter		Min	Typ	Max	Units	Conditions
Operating Frequency		10		1000	MHz	
DC Current			3.0	5.0	mA	At +5 VDC Supply
Control Type			TTL			1 Line Logic "0" = RF COM to RF2 Logic "1" = RF COM to RF1
Control Current	*High*		0	±10	µA	VIH = +3.0V
	Low		0	±10	µA	VIL = +0.5V
Insertion Loss			0.5	0.85	dB	10 - 100 MHz
			0.9	1.25	dB	100 - 1000 MHz
Isolation		50	64		dB	10 - 100 MHz
		40	53		dB	100 - 300 MHz
		25	35		dB	300 - 1000 MHz
VSWR	*Thru*		1.2/1	1.4/1		
	Termination		1.3/1	2/1		
Impedance			50		OHMS	
Switching Speed			50	70	nSEC	50% TTL To 90% / 10% RF
Transition (Rise/Fall) Time			30		nSEC	90% / 10% or 10% / 90% RF
Switching (Video) Transients			36	50	mV	Peak Value
Intercept Points	*2nd*		+84		dBm	450 MHz / 260 MHz
	3rd		+50		dBm	225 MHz / 260 MHz
RF Power	*Operate*		+8	+5	dBm	10 - 100 MHz 0.1 dB Comp.
			+13	+10	dBm	100 - 1000 MHz 0.1 dB Comp.
	No Damage			+30	dBm	
Operating Temperature		-55	+25	+125	°C	TA

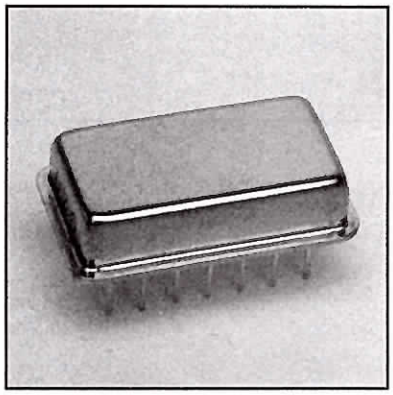

MODEL NUMBER DS0602

GaAs SP2T

FEATURES

- 5 - 4000 MHz
- 16 nSec Switching Speed
- 0.2 mA, +5 VDC
- TTL Driver
- Non-Reflective
- See DS0632 For Surface Mount Version

SP2T

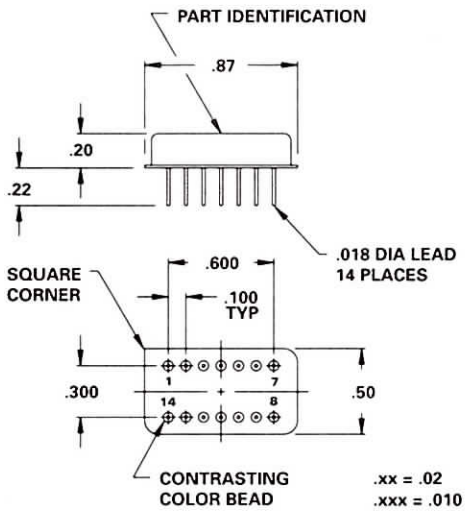

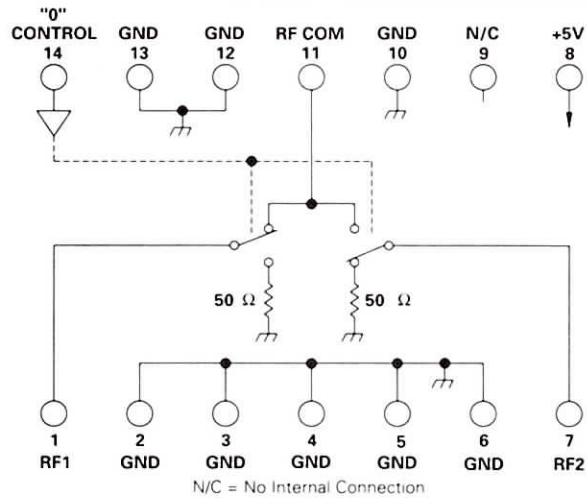

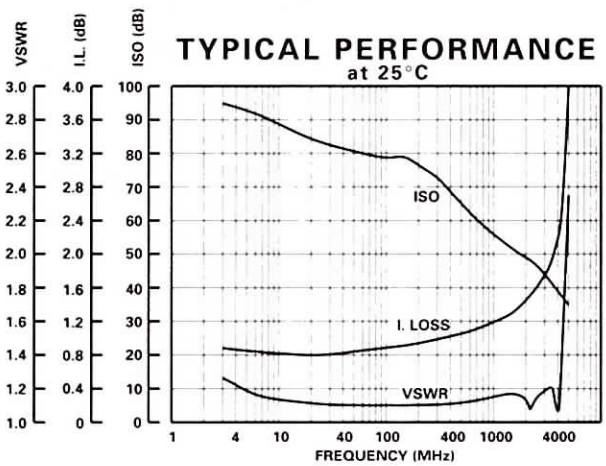

GUARANTEED PERFORMANCE

Parameter		Min	Typ	Max	Units	Conditions
Operating Frequency		5		4000	MHz	
DC Current			0.23	1	mA	AT +5 VDC Supply
Control Type						1 Line TTL OR +5V CMOS
						Logic "0" = RF COM to RF1
						Logic "1" = RF COM to RF2
Control Current	*High*		1	±10	µA	VIH = +2.7V
	Low		1	±10	µA	VIL = +0.5V
Insertion Loss			0.9	1.2	dB	5 - 50 MHz
			1.1	1.5	dB	50 - 500 MHz
			1.5	2.0	dB	500 - 2000 MHz
			2.5	3.0	dB	2000 - 4000 MHz
Isolation		70	76		dB	5 - 200 MHz
		60	65		dB	200 - 500 MHz
		50	55		dB	500 - 1000 MHz
		40	48		dB	1000 - 2000 MHz
		30	37		dB	2000 - 4000 MHz
VSWR	*Thru*		1.2/1	1.3/1		5 - 2000 MHz
			1.2/1	2.0/1		2000 - 4000 MHz
	Termination		1.5/1	2.0/1		5 - 2000 MHz
			1.8/1	2.2/1		2000 - 4000 MHz
Impedance			50		OHMS	
Switching Speed			16	25	nSEC	50% TTL to 90% / 10% RF
Transition (Rise/Fall) Time			4	15	nSEC	90% / 10% or 10% / 90% RF
Switching (Video) Transients			30	200	mV	Peak Value
Intercept Points	*2nd*	+50	+66		dBm	214 MHz / 127 MHz
	3rd	+30	+40		dBm	107 MHz / 127 MHz
RF Power	*Operate*		+9	+7	dBm	0.1 dB Comp Below 50 MHz
			+12	+10	dBm	0.1 dB Comp 50 - 300 MHz
			+19	+17	dbm	0.1 dB Comp Above 300 MHz
	No Damage			+27	dBm	
Operating Temperature		-55	+25	+125	°C	TA

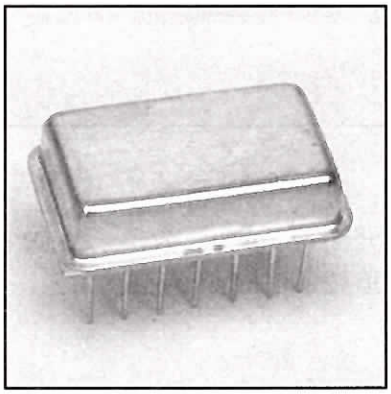

MODEL NUMBER DSW22023

GaAs SP2T

FEATURES

- 20-550 MHz
- Low Insertion Loss
- Low VSWR
- Broad Frequency Range
- Low DC Power

SP2T

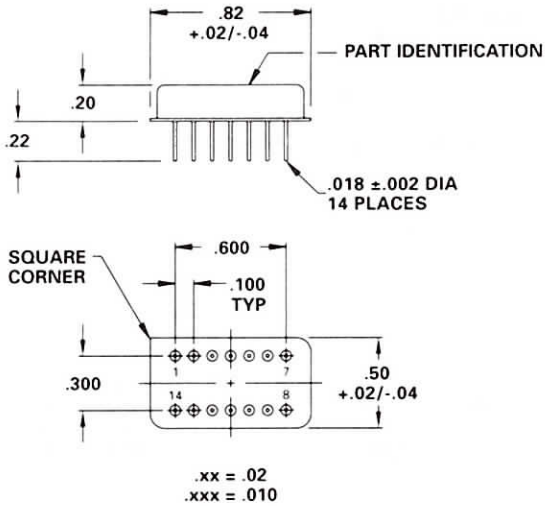

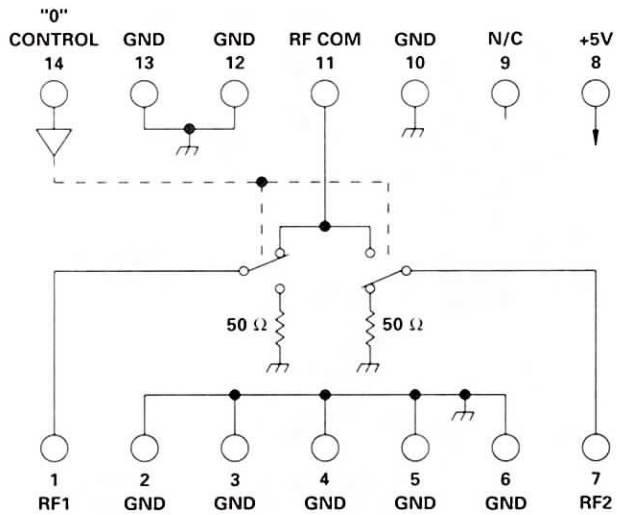

N/C = NO INTERNAL CONNECTION

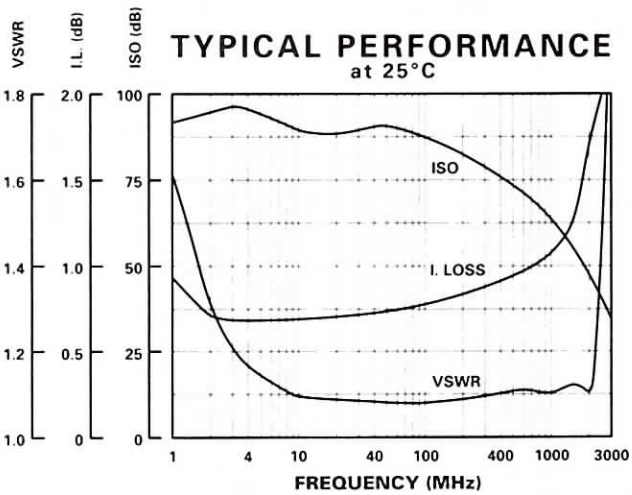

GUARANTEED PERFORMANCE

Parameter		Min	Typ	Max	Units	Conditions
Operating Frequency		20		550	MHz	
DC Current			0.2	5	mA	At +5 VDC Supply
Control Type			TTL			1 Line "0" = Pin 11 To Pin 1 "1" = Pin 11 To Pin 7
Control Current	*High*		±0.1		µA	VIH = +2.7V
	Low		±0.1		µA	VIL = +0.5V
Isolation		55	72		dB	
Insertion Loss			0.90	1.3	dB	
VSWR	*Thru*		1.11/1	1.3/1		
	Termination		1.06/1	2/1		
Impedance			50		OHMS	
Switching Speed			0.25	6	µSec	50% TTL to 90% / 10% RF
Transition (Rise/Fall) Time			20		nSec	10% / 90% or 90% / 10% RF
Switching (Video) Transients			40		mV	Peak Value
Intercept Points	*2nd*		+82		dBm	70 MHz / 50 MHz
	3rd	+30	+50		dBm	35 MHz / 50 MHz
RF Power	*Operate*		+19	+5	dBm	0.1 dB Compression
	No Damage			+30	dBm	
Operating Temperature		-55	+25	+125	°C	TA

LOGIC TABLE

CONTROL LINE	RF PATH
"0"	RF COM TO RF 1 (PIN 11 TO PIN 1)
"1"	RF COM TO RF 2 (PIN 11 TO PIN 7)

DAICO Industries

310.507.3242 • FAX 310.507.5701 • www.daico.com

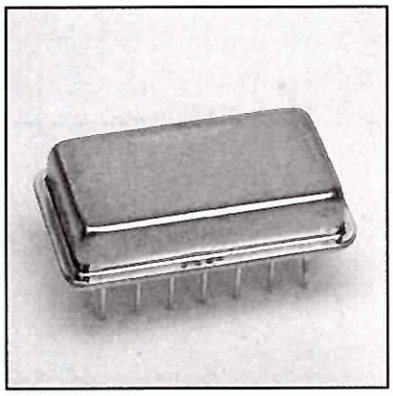

MODEL NUMBER DS0612

Pin Diode SP2T

FEATURES

- 20-2000 MHz
- Low Cost
- TTL Driver
- Non-Reflective
- 14 Pin DIP

SP2T

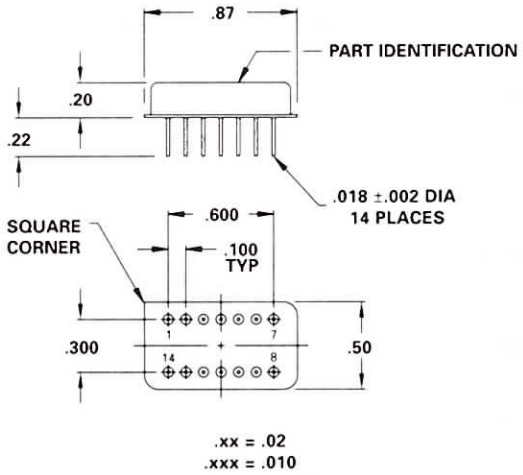

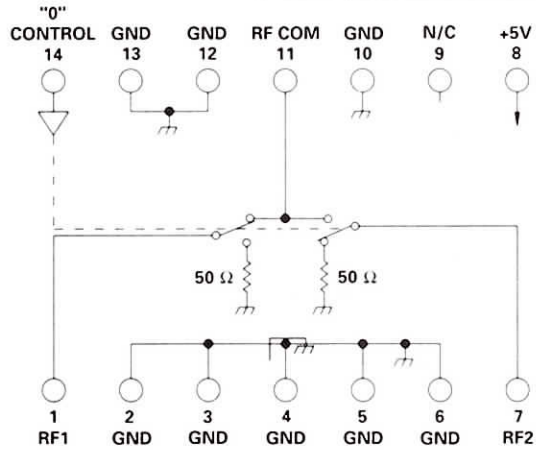

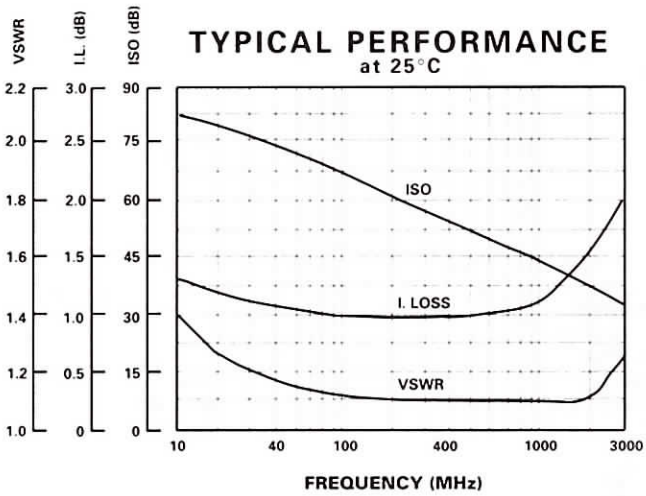

GUARANTEED PERFORMANCE

Parameter		Min	Typ	Max	Units	Conditions
Operating Frequency		20		2000	MHz	
DC Current			2.2	3	mA	At +5 VDC Supply
						With 0V or +5V Cont.
Control Type						1 Line TTL or 5V CMOS
						Logic "0" = RF COM to RF1
						Logic "1" = RF COM to RF2
Control Current	*High*			±1	µA	VIH = +2.7V
	Low			±1	µA	VIL = +0.5V
Insertion Loss			1.3	1.7	dB	20 - 60 MHz
			1.1	1.7	dB	60 - 1000 MHz
			1.6	2.3	dB	1000 - 2000 MHz
Isolation		50	58		dB	20 - 200 MHz
		40	45		dB	200 - 1000 MHz
		30	37		dB	1000 - 2000 MHz
VSWR	*Thru*		1.25/1	1.50/1		20 - 60 MHz
			1.15/1	1.30/1		60 - 1000 MHz
			1.25/1	1.50/1		1000 - 2000 MHz
	Termination		1.20/1	1.50/1		20 - 2000 MHz
Impedance			50		OHMS	
Switching Speed			3.5	10	µSEC	50% TTL to 90% / 10% RF
Transition (Rise/Fall) Time			1		µSEC	90% / 10% or 10% / 90% RF
Switching (Video) Transients			120		mV	Peak Value
Intercept Points	*2nd*		+44		dBm	@ 60 MHz
	3rd		+35		dBm	@ 60 MHz
RF Power	*Operate*		+5	0	dBm	0.1 dB Comp. 20 - 60
			+10	+5	dBm	60 - 200
			+16	+10	dBm	200 - 2000
	No Damage			+20	dBm	
Operating Temperature		-55	+25	+125	°C	TA

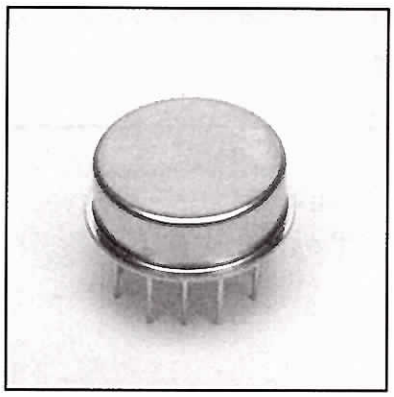

MODEL NUMBER DSW22201

Switch SP2T

FEATURES

- 30-400 MHz
- 0.4 dB Insertion Loss
- 9 mV Switching Transients
- TO- Package

SP2T

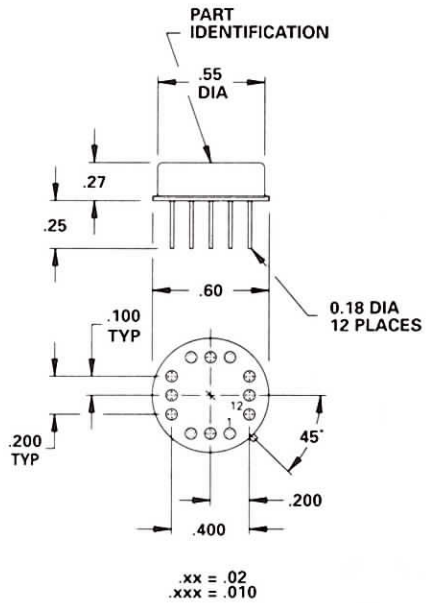

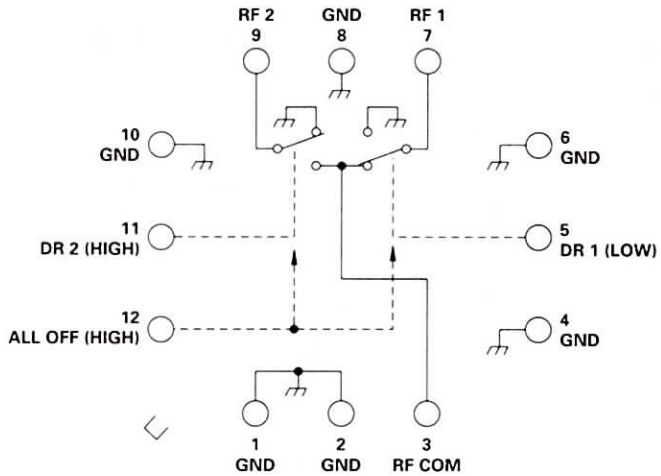

		Voltage	Source Z	Current
Drive (N)	High	+15V	700 Ω	Source = 7.2 mA
	Low	0V	700 Ω	Sink = 7.2 mA
All Off Drive	High	+15V	370 Ω	0 mA
	Low	0V	370 Ω	Sink = 14.4 mA

Selection	Drive 1	All Off	Drive 2
RF 1 (On)	Low	High	High
All Off	High	Low	High
RF 2 (On)	High	High	Low

TYPICAL PERFORMANCE at 25°C

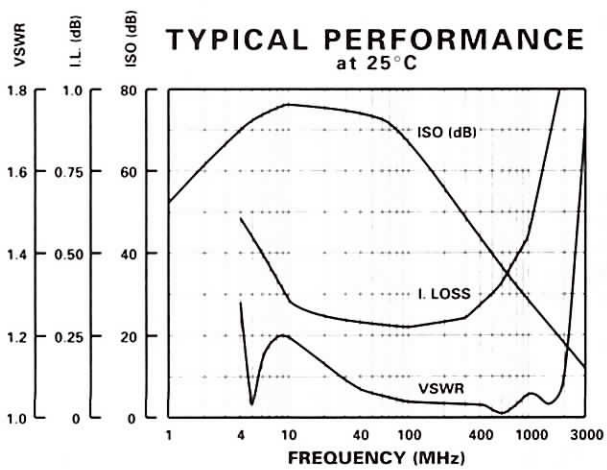

GUARANTEED PERFORMANCE

Parameter		Min	Typ	Max	Units	Conditions
Operating Frequency		30		400	MHz	
DC Current					mA	See Table
Control Type			TTL			2 Line, See Table
Control Current	*High*		7.7		mA	VIH = +15 V
	Low		0		mA	VIL = 0 V
	All Off		15.9		mA	
Insertion Loss			0.40	0.46	dB	
Isolation		40	43		dB	
VSWR			1.05/1	1.16/1		
Impedance			50		OHMS	
Switching Speed			78		µSec	50% TTL - 90% / 10% RF
Transition (Rise/Fall) Time			57		µSec	10% / 90% - 90% / 10% RF
Switching (Video) Transients			9		mV	Peak Value
Intercept Points	*2nd*		+72		dBm	52.5 MHz / 27.5 MHz
	3rd		+38		dBm	26.25 MHz / 27.5 MHz
RF Power	*Operate*		+21		dBm	.1 dB Compression
	Maximum		+30		dBm	No Damage
Operating Temperature		-55	+25	+85	°C	

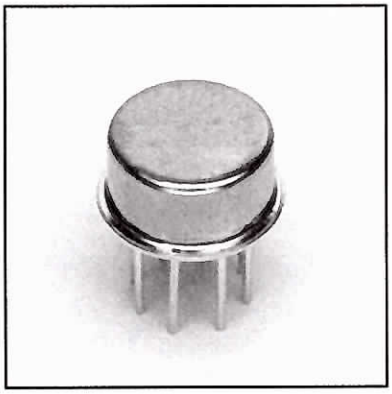

MODEL NUMBER CSW22223

Switch SP2T

FEATURES

- 450-950 MHz
- +47 dB 3rd Order Intercept Point
- 8 mV Switching Transients
- TO- Package

SP2T

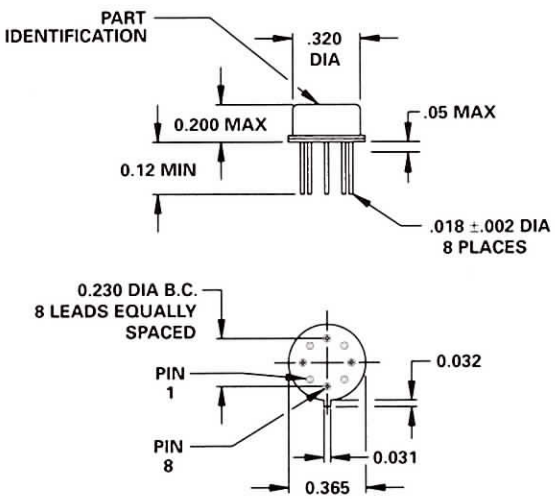

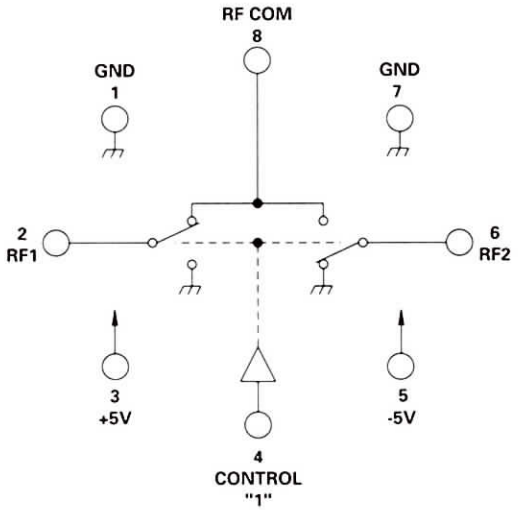

LOGIC TABLE	
TTL CONTROL	THRU PATH
0	RF COM TO RF2
1	RF COM TO RF1

TYPICAL PERFORMANCE

at 25°C

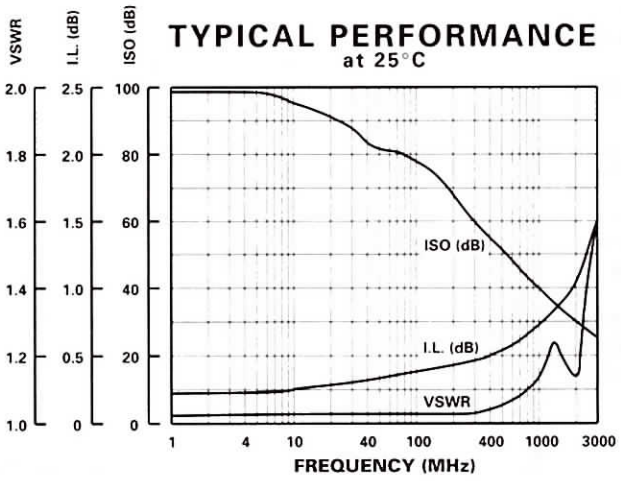

GUARANTEED PERFORMANCE

Parameter		Min	Typ	Max	Units	Conditions
Operating Frequency		450		950	MHz	
DC Current			2	4	mA	At +5 VDC Supply
			1	2	mA	At -5 VDC Supply
Control Type			TTL			1 Line
						Logic "1" = RF Com to RF1
Control Current	*High*		1	±40	µA	VIH = +2.7 V
	Low		1	+40	µA	VIL = +0.5 V
Insertion Loss			0.6	0.9	dB	
Isolation		35	39		dB	
VSWR			1.2	1.4/1		
Impedance			50		OHMS	
Switching Speed			65	150	nSec	50% TTL - 90% / 10% RF
Transition (Rise/Fall) Time			27	30	nSec	10% / 90% - 90% / 10% RF
Switching (Video) Transients			8	45	mV	Peak Value
Intercept Points	*2nd*	+50	+85		dBm	500 MHz / 510 MHz
	3rd	+35	+47		dBm	500 MHz / 510 MHz
RF Power	*Operate*		+21	+18	dBm	1 dB Compression
	No Damage			+23	dBm	
Operating Temperature		-55	+25	+105	°C	TA

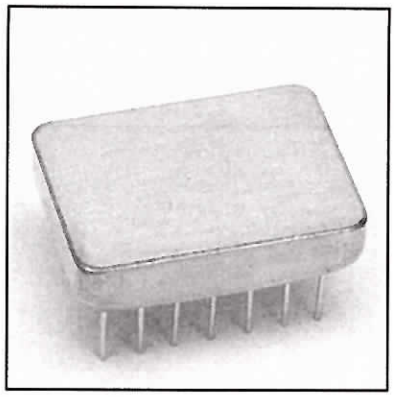

MODEL NUMBER DS0432

2 Watt PIN Diode SP2T

FEATURES

- 200-900 MHz
- 2 Watts CW
- 0.3 dB Insertion Loss
- Non-Reflective
- TTL Driver
- 14 Pin DIP

SP2T

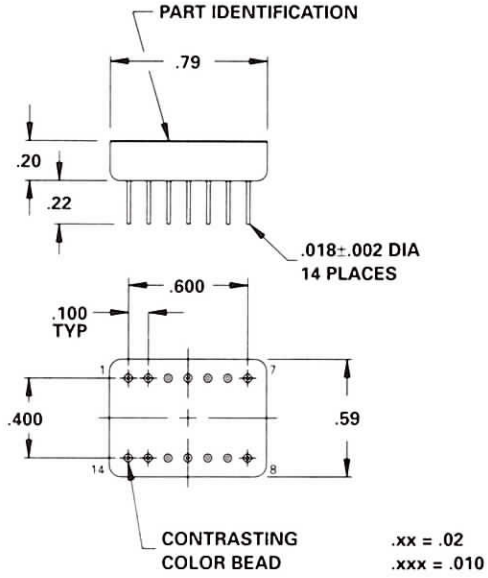

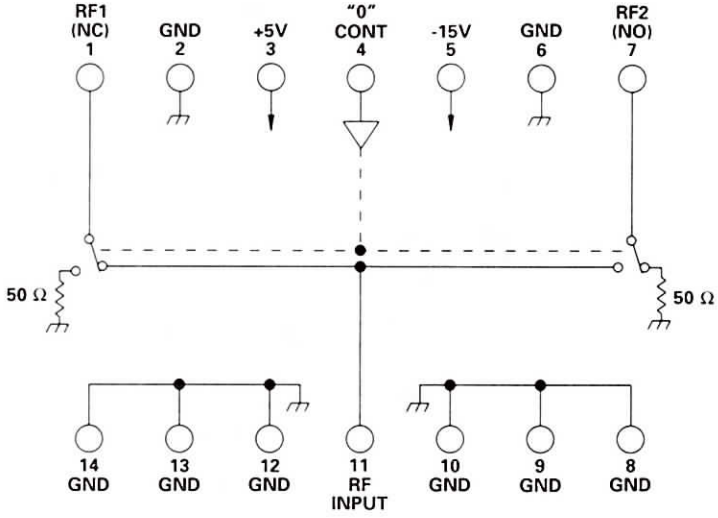

TYPICAL PERFORMANCE
at 25°C

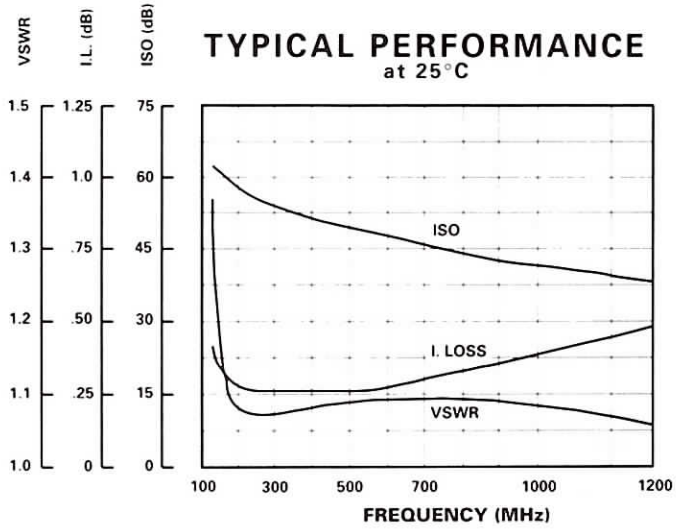

GUARANTEED PERFORMANCE

Parameter		Min	Typ	Max	Units	Conditions
Operating Frequency		200		900	MHz	
DC Current			22	30	mA	At +5 VDC Supply
			23	30	mA	At -15 VDC Supply
Control Type			TTL			1 Line Logic "0" = RF IN to RF 1 Logic "1" = RF IN to RF 2
Control Current	*High*			+40	µA	VIH = +2.7V
	Low			-0.8	µA	VIL = +0.5V
Insertion Loss			0.3	0.8	dB	
Isolation		35	45		dB	
VSWR			1.1/1	1.25/1		
Impedance			50		OHMS	
Switching Speed			0.7	1.5	µSEC	50% TTL to 90% / 10% RF
Intercept Points	*3rd*		+47			
RF Power	*Operate*		+36	+33	dBm	
	No Damage Thru			+35	dBm	
	No Damage Termination			+20	dBm	
Operating Temperature		-55	+25	+85	°C	TA

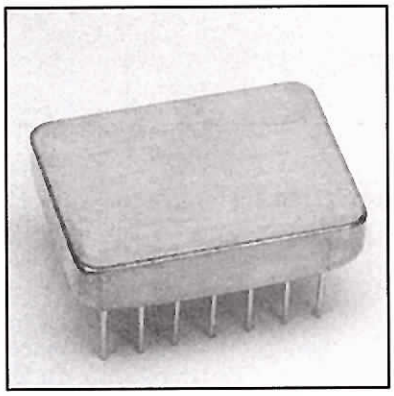

MODEL NUMBER DS0492

1 Watt PIN Diode SP2T

FEATURES

- 5 - 200 MHz
- 1 Watt CW Thru
- 0.5 dB Insertion Loss
- +43 dBm 3rd Order I.P.
- +33 dBm 0.1 dB Compression
- Non-Reflective
- 14 Pin DIP
- See DS0432 for 200-900 MHz Version

SP2T

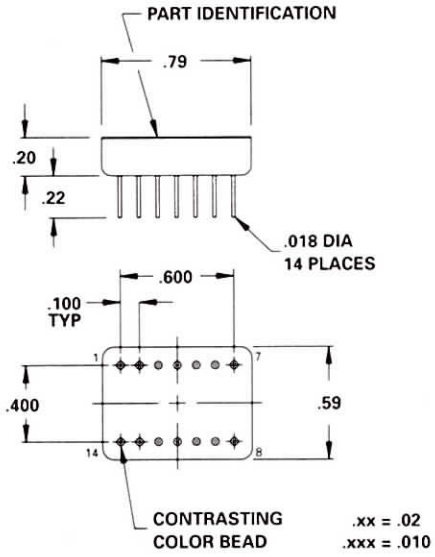

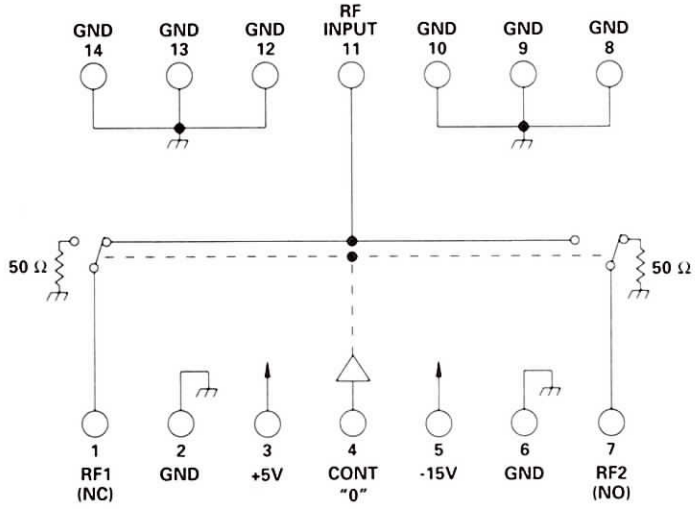

TYPICAL PERFORMANCE
at 25°C

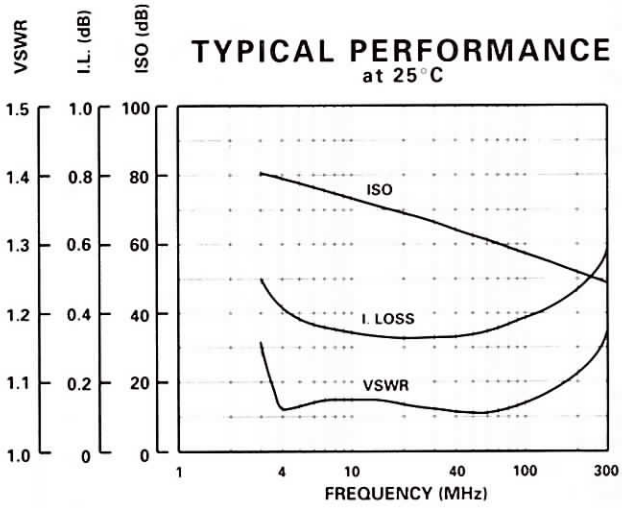

GUARANTEED PERFORMANCE

Parameter		Min	Typ	Max	Units	Conditions
Operating Frequency		5		200	MHz	
DC Current			22	30	mA	At +5 VDC Supply
			23	30	mA	At -15 VDC Supply
Control Type			TTL			1 Line
						Logic "0" = RF IN to RF 1
						Logic "1" = RF IN to RF 2
Control Current	*High*			80	µA	VIH = +2.7V
	Low			-800	µA	VIL = +0.5V
Insertion Loss			0.5	0.8	dB	
Isolation		55	66		dB	5 - 32 MHz
		40	52		dB	32 - 200 MHz
VSWR			1.1/1	1.25/1		
	Termination		1.2/1	1.40/1		
Impedance			50		OHMS	
Switching Speed			11	20	µSEC	50% TTL to 90% / 10% RF
Transition (Rise/Fall) Time			3		µSEC	90% / 10% or 10% / 90%
Switching (Video) Transients			650		mV	Peak Value
Intercept Points	*2nd*		+104		dBm	5.6 MHz / 9.5 MHz Inputs
	3rd		+43		dBm	5.6 MHz / 7.3 MHz Inputs
RF Power	*Operato*		+33	+30	dBm	0.1 dB Compression
	No Damage Thru			+33	dBm	
	No Damage Termination			+20	dBm	
Operating Temperature		-55	+25	+125	°C	TA

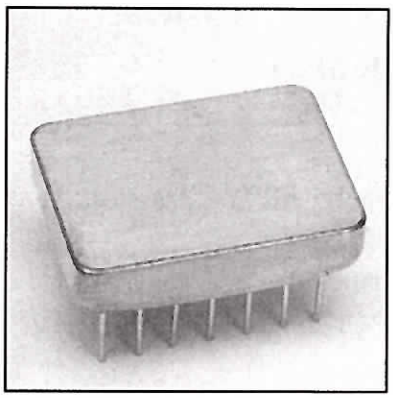

MODEL NUMBER DS0966-1

PIN Diode SP2T

FEATURES

- 20 - 2000 MHz
- Very Low Insertion Loss
- High Insertion Points
- Non-Reflective
- 14 Pin DIP

SP2T

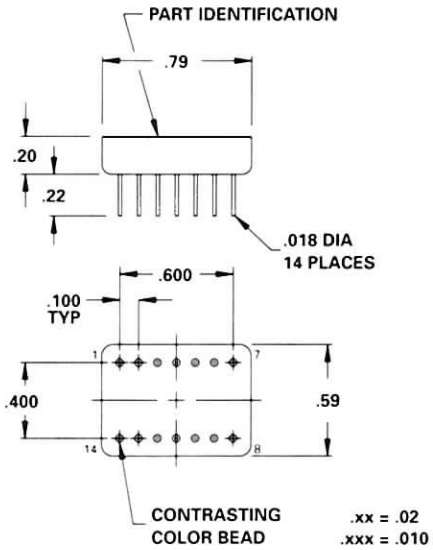

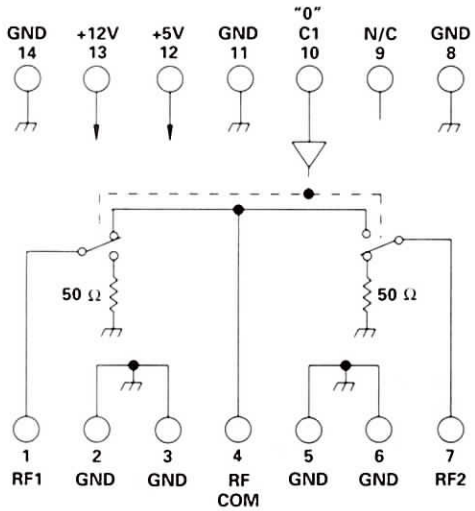

N/C = NO INTERNAL CONNECTION

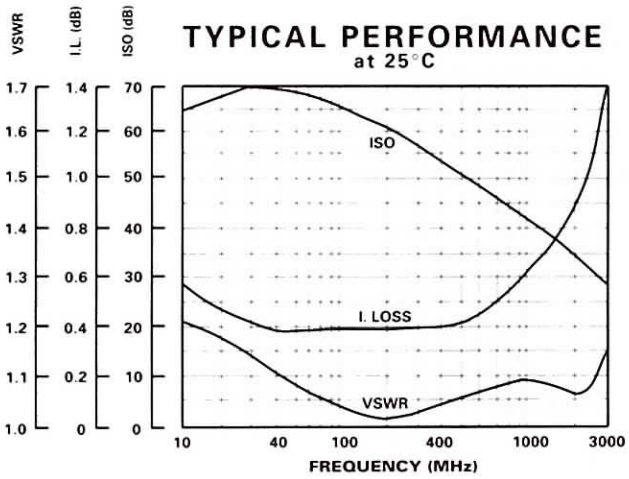

GUARANTEED PERFORMANCE

Parameter		Min	Typ	Max	Units	Conditions
Operating Frequency		20		2000	MHz	
DC Current			19	30	mA	At +5 VDC Supply
			6.5	10	mA	At +12 VDC Supply
Control Type			TTL			1 Line
						Logic "0" = RF COM to RF 1
						Logic "1" = RF COM to RF 2
Control Current	*High*		0	+20	µA	VIH = +2.7V
	Low		0	+20	µA	VIL = +0.5V
Insertion Loss			0.44	0.5	dB	20 - 500 MHz
			0.65	0.8	dB	500 - 1000 MHz
			0.90	1.1	dB	1000 - 2000 MHz
Isolation		43	50		dB	20 - 500 MHz
		35	43		dB	500 - 1000 MHz
		28	35		dB	1000 - 2000 MHz
VSWR	*Thru*		1.16/1	1.3/1		
	Termination		1.18/1	1.3/1		
Impedance			50		OHMS	
Switching Speed			1.4	5	µSEC	50% TTL to 90% / 10% RF
Transition (Rise/Fall) Time			0.7		µSEC	90% / 10% or 10% / 90%
Switching (Video) Transients			1.8		V	Peak Value
Intercept Points	*2nd*		+84		dBm	214 MHz / 127 MHz Inputs
	3rd	+40	+56		dBm	107 MHz / 127 MHz Inputs
RF Power	*Operate*		+29	+25	dBm	0.1 dB Compression
	No Damage			+30	dBm	
Operating Temperature		0	+25	+54	C	TA

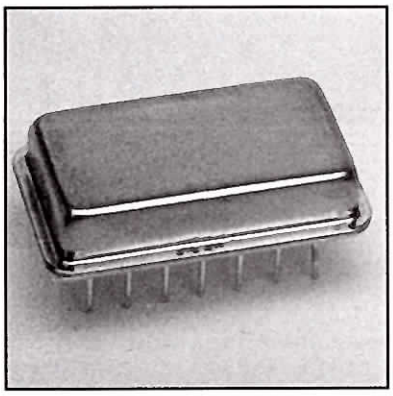

MODEL NUMBER DS0613

PIN Diode SP2T

FEATURES

- 5-2000 MHz
- TTL Driver
- 14 Pin DIP

SP2T

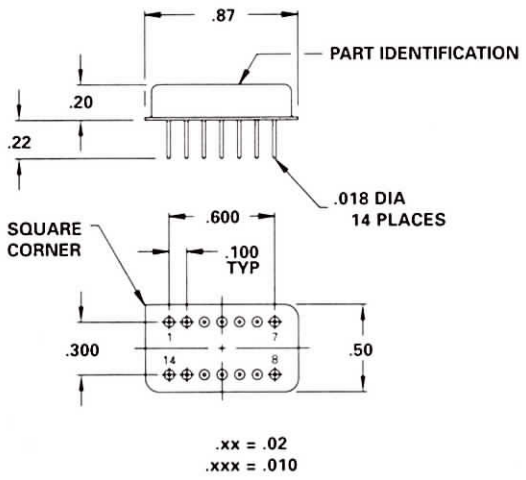

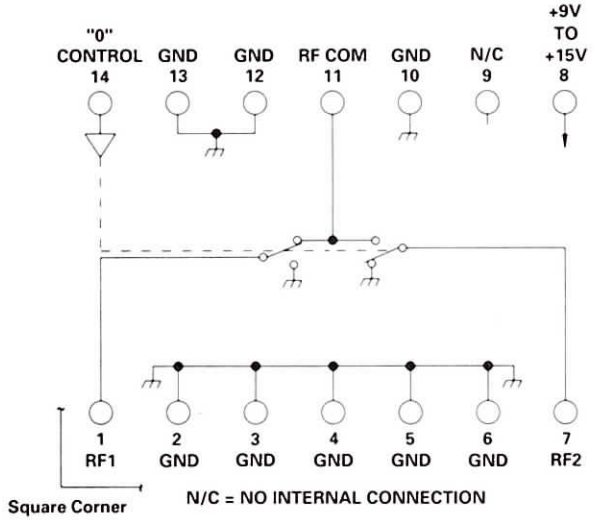

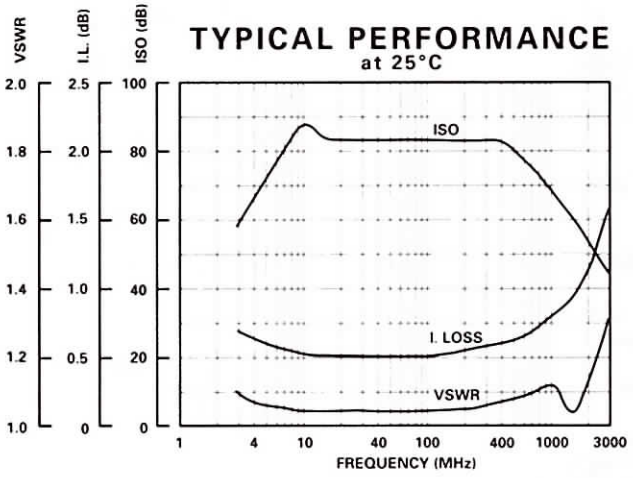

GUARANTEED PERFORMANCE

Parameter		Min	Typ	Max	Units	Conditions
Operating Frequency		5		2000	MHz	
DC Current			24	35	mA	At +9 to +15 VDC Supply
Control Type			TTL			1 Line
						Logic "0" = COM to RF1
						Logic "1" = COM to RF2
Control Current	*High*		1	±10	µA	VIH = +2.7V
	Low		1	±10	µA	VIL = +0.5V
Insertion Loss			0.7	1.0	dB	5 - 500 MHz
			1.0	1.5	dB	500 - 1000 MHz
			1.2	1.7	dB	1000 - 2000 MHz
Isolation		60	70		dB	5 - 10 MHz
		70	80		dB	10 - 500 MHz
		60	70		dB	500 - 1000 MHz
		50	60		dB	1000 - 2000 MHz
VSWR	*Thru*		1.15/1	1.25/1		5 - 10 MHz
			1.10/1	1.20/1		10 - 1000 MHz
			1.15/1	1.50/1		1000 - 2000 MHz
Impedance			50		OHMS	
Switching Speed			2	3	µSEC	50% TTL to 90% / 10% RF
Transition (Rise/Fall) Time			0.5		µSEC	90% / 10% or 10% / 90% RF
Switching (Video) Transients			360	700	mV	Peak Value
Intercept Points	*2nd*	+60	+78		dBm	150 MHz / 350 MHz
	3rd	+30	+45		dBm	200 MHz / 350 MHz
RF Power	*Operate*		+7	0	dBm	5 - 20 MHz
			+15	+10	dBm	20 - 50 MHz
			+20	+13	dBm	50 - 2000
	No Damage			+27	dBm	
Operating Temperature		-55	+25	+125	°C	TA

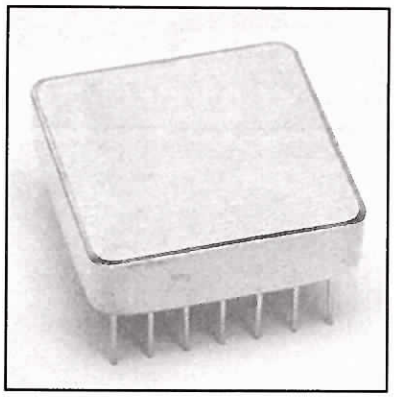

MODEL NUMBER DS0880

PIN Diode SP2T

FEATURES

- 1 - 250 MHz
- Very High Intercept Points
- One Watt Power Handling
- Low Insertion Loss

SP2T

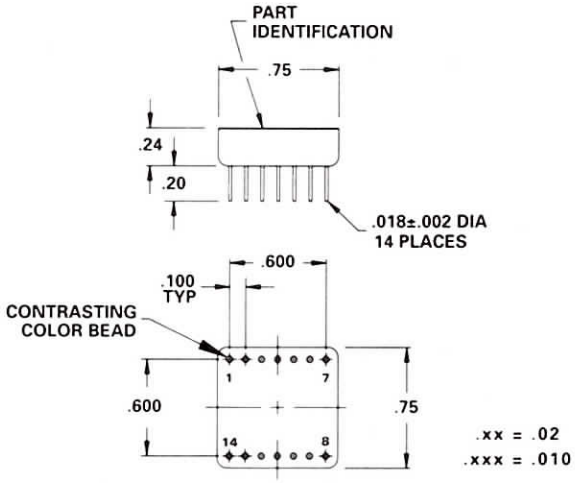

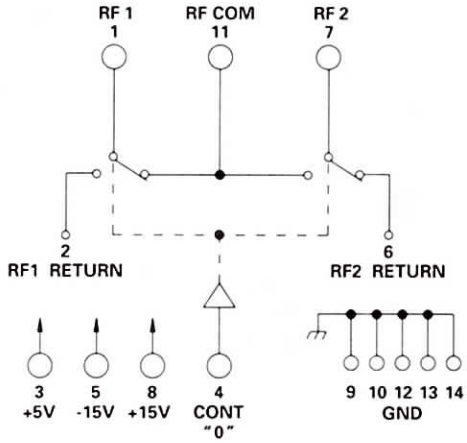

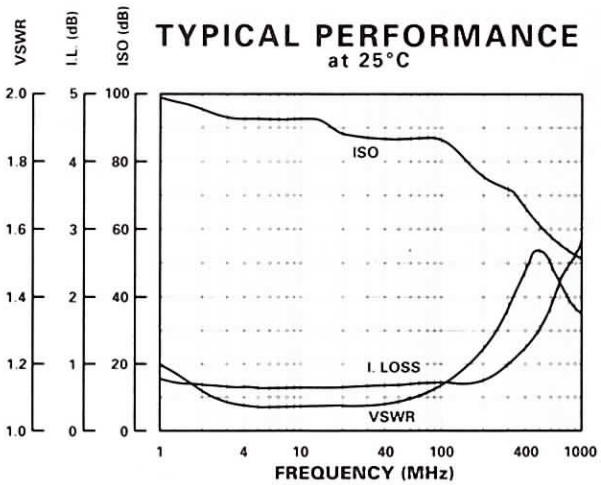

GUARANTEED PERFORMANCE

Parameter		Min	Typ	Max	Units	Conditions
Operating Frequency		1		250	MHz	
DC Current			2	10	mA	At +5 VDC Supply
			25	40	mA	At +15 VDC Supply
			26	40	mA	At -15 VDC Supply
Control Type			TTL			1 Line
						Logic "0" = RF COM to RF1
						Logic "1" = RF COM to RF2
Control Current	*High*				µA	VIH = +2.7V
	Low				µA	VIL = +0.5V
Insertion Loss			0.8	1.4	dB	
Isolation		75	86		dB	1 - 100 MHz
		65	72		dB	100 - 250 MHz
VSWR	*Thru*		1.15/1	1.3/1		1 - 100 MHz
			1.3/1	1.5/1		100 - 250 MHz
Impedance			50		OHMS	
Switching Speed			20	40	µSEC	50% TTL to 90% / 10% RF
Transition (Rise/Fall) Time			12		µSEC	90% / 10% or 10% / 90% RF
Switching (Video) Transients			2.5		V	Peak Value
Intercept Points	*2nd*		+106		dBm	70 MHz / 50 MHz
	3rd		+57		dBm	35 MHz / 50 MHz
RF Power	*Operate*					See Table
Operating Temperature		-55	+25	+125	°C	TA

RF POWER (dBm) TABLE				
FREQ MHz	0.1 dB Comp		1.0 dB Comp	
	TYP	MAX	TYP	MAX
1 - 2	+15		+31	
2 - 5	+26		+36	+33
5 - 10	+35	+33	>+42	
10 - 250	+40	+33	>+42	
No Damage		+37		

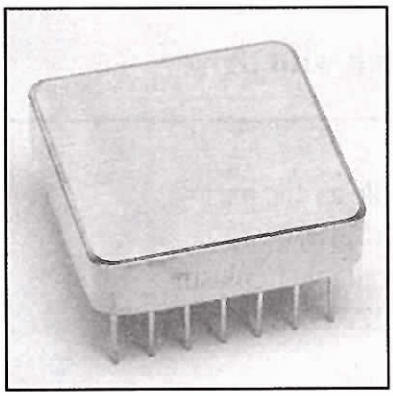

MODEL NUMBER DSW21998

GaAs SP2T

FEATURES

- 0.5 - 100 MHz
- High Intercept Points
- 0.6 dB Insertion Loss
- 5 mA, ±15 VDC
- Non Reflective
- TTL Control
- 14 Pin DIP

SP2T

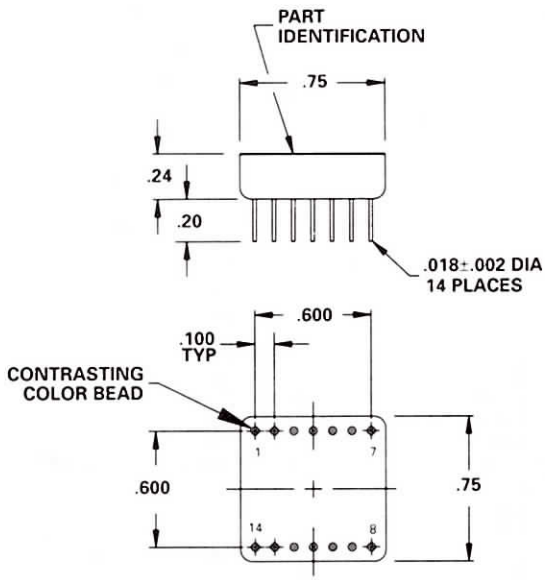

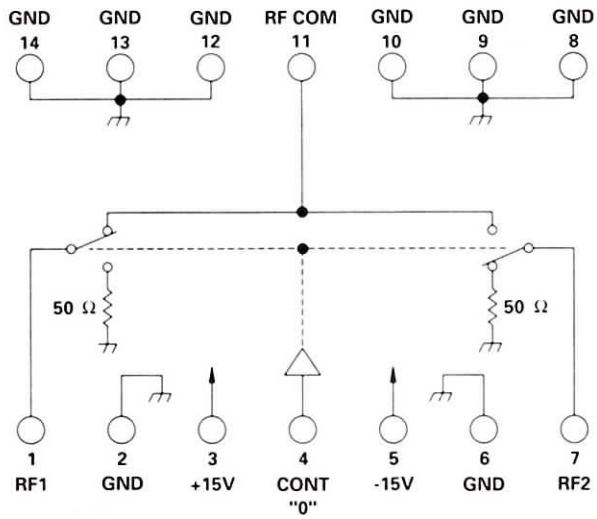

TYPICAL PERFORMANCE at 25°C

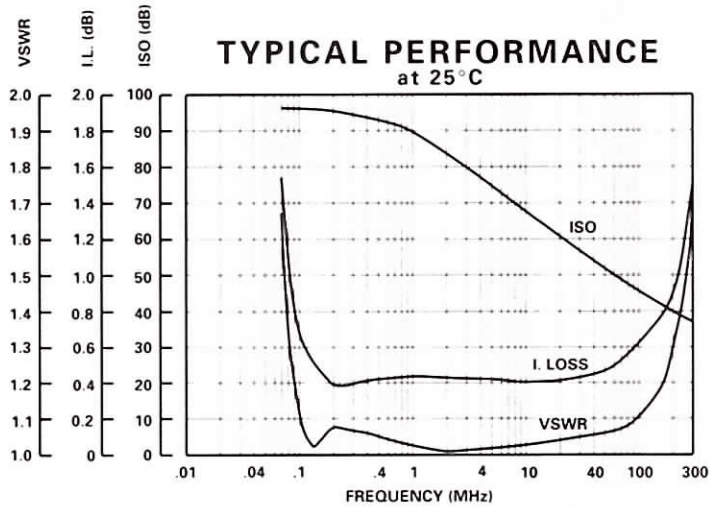

GUARANTEED PERFORMANCE

Parameter		Min	Typ	Max	Units	Conditions
Operating Frequency		0.5		100	MHz	
DC Current			5	10	mA	At +15 VDC Supply
			4	5	mA	At -15 VDC Supply
Control Type			TTL			1 Line
						Logic "0" = RF COM to RF1
						Logic "1" = RF COM to RF2
Isolation		64	68		dB	10 MHz
		53	57		dB	30 MHz
		42	46		dB	100 MHz
Insertion Loss			0.6	.9	dB	
VSWR	*Thru*		1.1/1	1.25/1		
	Termination		1.1/1	1.25/1		
Impedance			50		OHMS	
Switching Speed			5	10	µSEC	50% TTL to 90% / 10% RF
Transition (Rise/Fall) Time			3.5	5	µSEC	10% / 90% or 90% / 10% RF
Switching (Video) Transients			10	20	mV	Peak Value
Intercept Points	*2nd*	+85	+96		dBm	
	3rd	+50	+58		dBm	
RF Power	*Operate*		+26	+19	dBm	0.1 dB Compression
	Common Port		+31	+24	dBm	1 dB Compression
Operating Temperature		-55	+25	+125	°C	TA

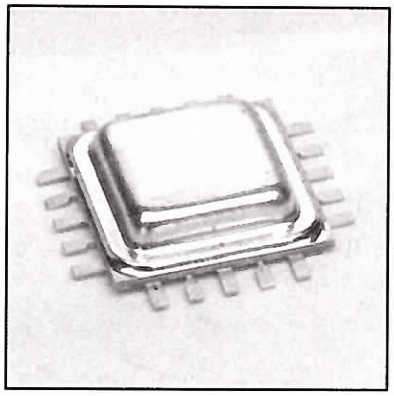

MODEL NUMBER DSW25151

Reflective Switch with Driver

FEATURES

- DC- 10 GHz Broad Bandwidth
- Internal Switch Driver
- Insertion Loss 1.5 dB
- Isolation 45 dB
- Available as die, part # DSW24071D, aslo available in plastic, part # DSW25251P

SP2T

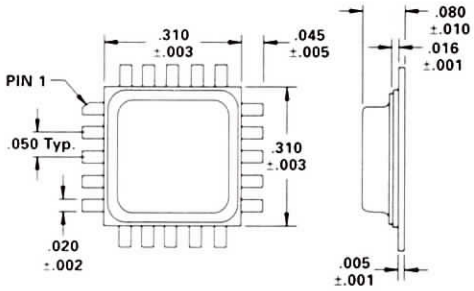

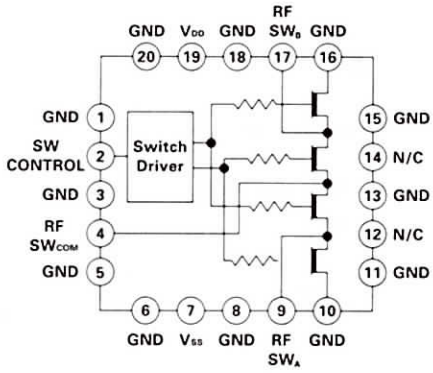

DIE DIAGRAM (53 X 43 MILS, 7 MILS THICK

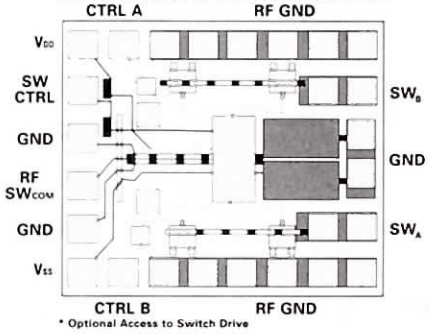

* Optional Access to Switch Drive

PIN FUNCTION

Pin Name	Pin#	Description
SW Control (TTL)	2	Switch Control: TTL logic input
RF SWCOM	4	Common RF input; DC-coupled
VSS	7	VSS; Negative supply voltage
RF SWA	9	RF input A; DC-coupled, "ON for a logic LOW applied to SW Control
N/C	12	No Connect
N/C	14	No Connect
RF SWB	17	RF input B; DC-coupled, "ON" for a logic HIGH applied to SW Control
VDD	19	VDD; Positive supply voltage
GND	(1)	Ground

Note: (1) GND Pins are 1, 3, 5, 6, 8, 10, 11, 13, 15, 16, 18, 20
AC Coupling may be required for your application

ABSOLUTE MAXIMUM RATINGS

Parameter	Min	Typ	Max	Units
DC Power Supply			±7	V
Operating Temperature	-55		+85	°C
Storage Temperature	-55		+150	°C
Power Dissipation			1.0	W

SWITCH LOGIC

SW CTRL	RF SWA	RF SWB
Low	On	Off
High	Off	On

TYPICAL PERFORMANCE

at 25°C

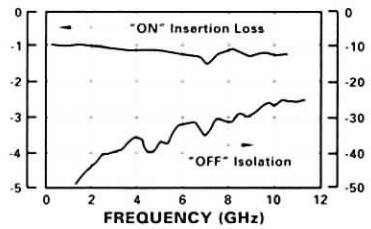

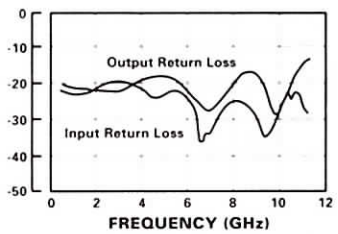

ELECTRICAL SPECIFICATIONS

$T_A = 25°C$, $V_{DD} = +5V$, $V_{SS} = -5V$

Parameter	Min(1)	Typ	Max(1)	Units
Frequency of Operation	DC		10	GHz
Insertion Loss		1.5	3.0	dB
Isolation - 1 GHz	40	45		dB
Isolation - 10 GHz	18	25		dB
Input Third - Order Intercept(2)		+35		dBm
Input / Output VSWR		2:1		
DC Supply Current @ ±5V		15	20	mA
Positive Supply	4.5	5	5.5	V
Negative Supply	-4.5	-5	-5.5	V
Input Logic Low		1.0		V
Input Logic High		3.0		V

Note: 1. Min / Max Values Listed are Production Tested
2. IP3 Decreases Below 1 GHz

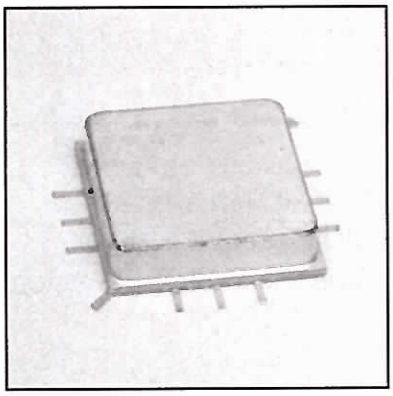

MODEL NUMBER DS0712

GaAs SP2T

FEATURES

- 10 - 1000 MHz
- 0.7 dB Insertion Loss
- Non-Reflective
- TTL Driver
- 12 Pin SMP
- See DS0812 For TO-8 Version

SP2T

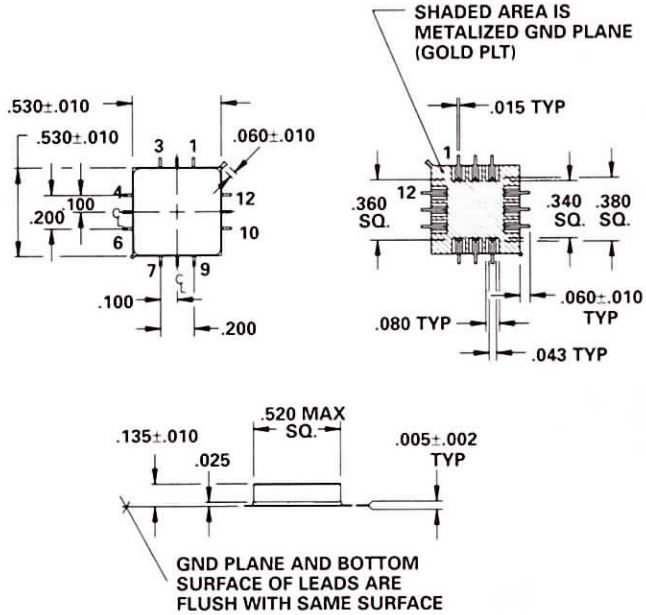

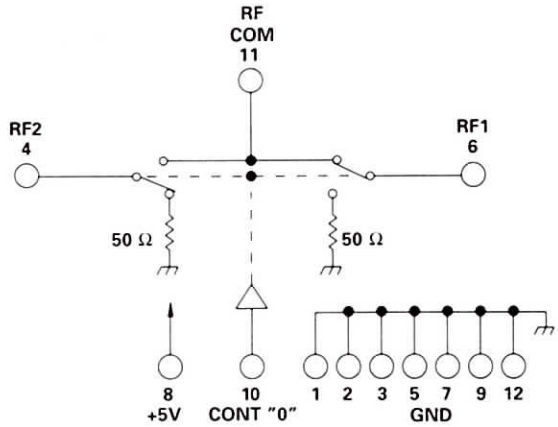

TYPICAL PERFORMANCE
at 25°C

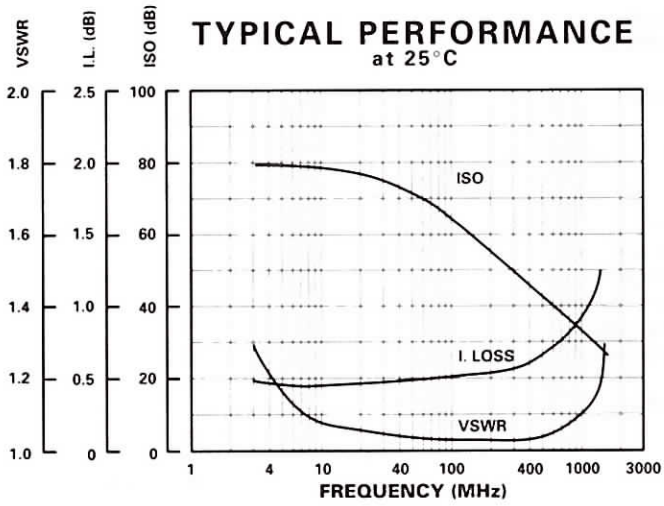

GUARANTEED PERFORMANCE

Parameter		Min	Typ	Max	Units	Conditions
Operating Frequency		10		1000	MHz	
DC Current			2	5	mA	At +5 VDC Supply
Control Type			TTL			1 Line Logic "0" = RF COM to RF1 Logic "1" = RF COM to RF2
Control Current	*High*		0	±10	µA	VIH = +3.0V
	Low		0	±10	µA	VIL = +0.5V
Insertion Loss			0.4	0.7	dB	10 - 100 MHz
			0.7	1.0	dB	100 - 1000 MHz
Isolation		50	61		dB	10 - 100 MHz
		40	50		dB	100 - 300 MHz
		25	32		dB	300 - 1000 MHz
VSWR	*Thru*		1.1/1	1.4/1		
	Termination		1.2/1	1.4/1		
Impedance			50		OHMS	
Switching Speed			30	50	nSEC	50% TTL to 90% / 10% RF
Transition (Rise/Fall) Time			15		nSEC	90% / 10% or 10% / 90% RF
Switching (Video) Transients			21	50	mV	Peak Value
Intercept Points	*2nd*		+89		dBm	70 MHz / 50 MHz
	3rd		+50		dBm	35 MHz / 50 MHz
RF Power	*Operate*		+19	+13	dBm	0.1 dB Compression
	No Damage			+30	dBm	
Operating Temperature		-55	+25	+125	°C	TA

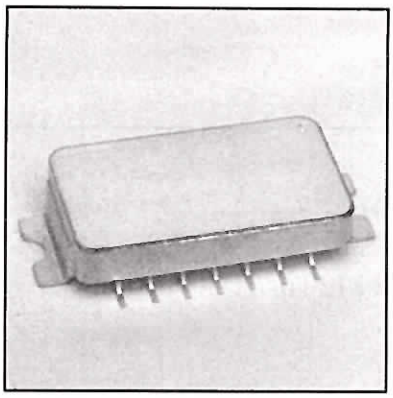

MODEL NUMBER DS0632

GaAs SP2T

FEATURES

- 5- 2000 MHz
- 34 nSec Switching Speed
- TTL Driver
- Non-Reflective
- 14 Pin Surface Mount Package
- See DS0602 For 14 Pin DIP Version

SP2T

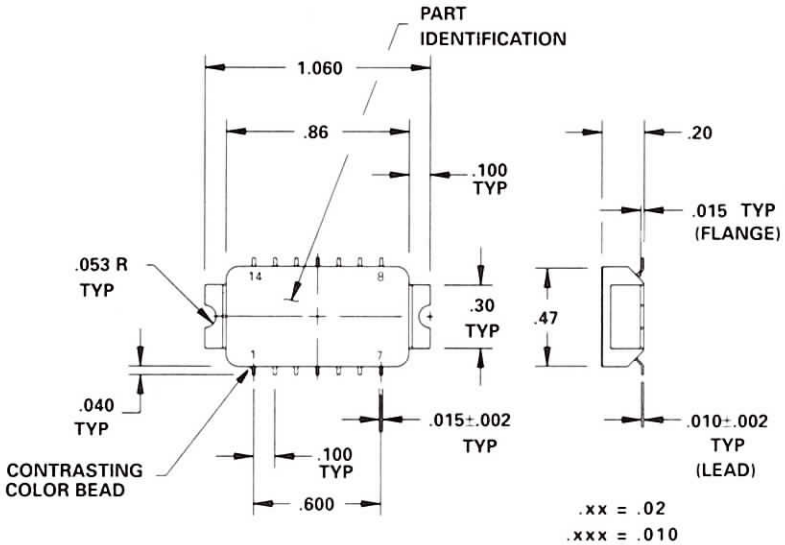

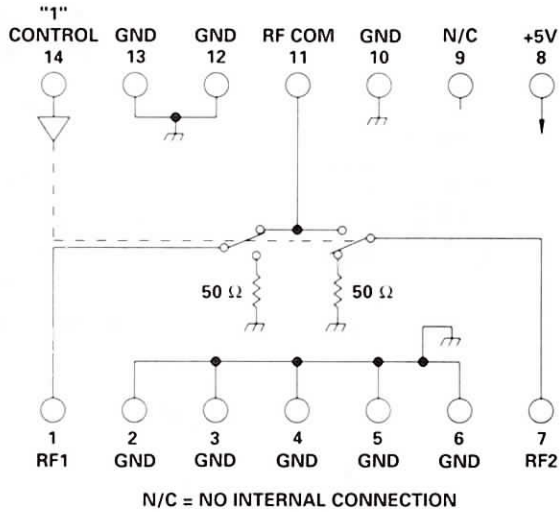

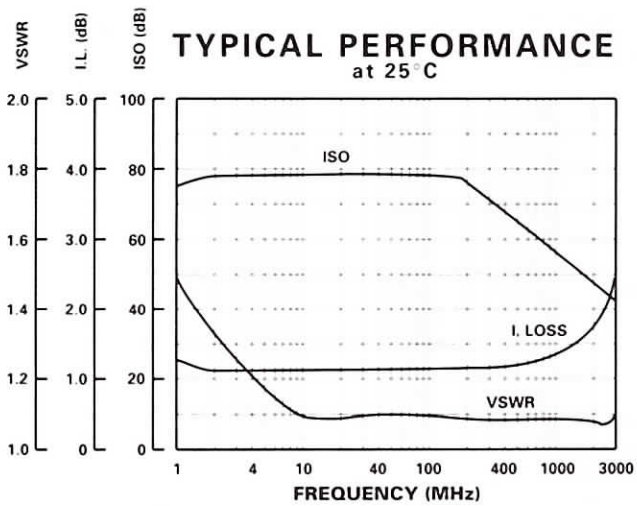

GUARANTEED PERFORMANCE

Parameter		Min	Typ	Max	Units	Conditions
Operating Frequency		5		2000	MHz	
DC Current			0.2	1	mA	At +5 VDC Supply
Control Type			TTL			Logic "1" = RF COM to RF1
Control Current	*High*		0	±20	µA	VIH = +2.7V
	Low		0	±20	µA	VIL = +0.5V
Isolation		60	78		dB	5 - 100 MHz
		40	49		dB	100 - 2000 MHz
Insertion Loss			1.0	1.5	dB	5 - 100 MHz
			1.5	2.0	dB	100 - 2000 MHz
VSWR	*Thru*		1.25/1	1.5/1		
	Termination		1.40/1	2.0/1		
Impedance			50		OHMS	
Switching Speed			34	50	nSEC	50% TTL to 90% / 10% RF
Transition (Rise/Fall) Time			10		nSEC	10% / 90% or 90% / 10% RF
Switching (Video) Transients			80		mV	
Intercept Points	*2nd*		+52		dBm	70 MHz / 35 MHz
	3rd		+35		dBm	35 MHz / 50 MHz
RF Power	*Operate*		+10	+7	dBm	0.1 dB Compression Below 100 MHz
			+18	+13	dBm	0.1 dB Compression Above 100 MHz
	No Damage			+27	dBm	
Operating Temperature		-55	+25	+125	C	TA

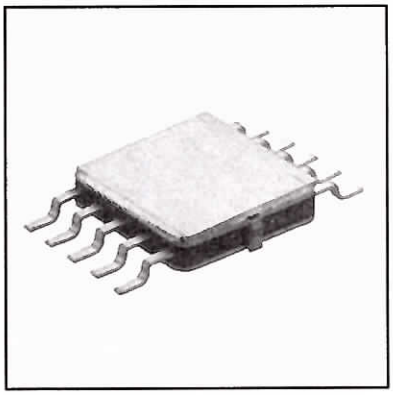

MODEL NUMBER DSW25038

GaAs SP2T

FEATURES

- DC- 2000 MHz
- 2 nSec Transition Time
- 5 nSec Switching Speed
- 10 mV Transients
- TTL Control
- Low Cost
- Ultra Small 0.270 SQ Surface Mount Package

SP2T

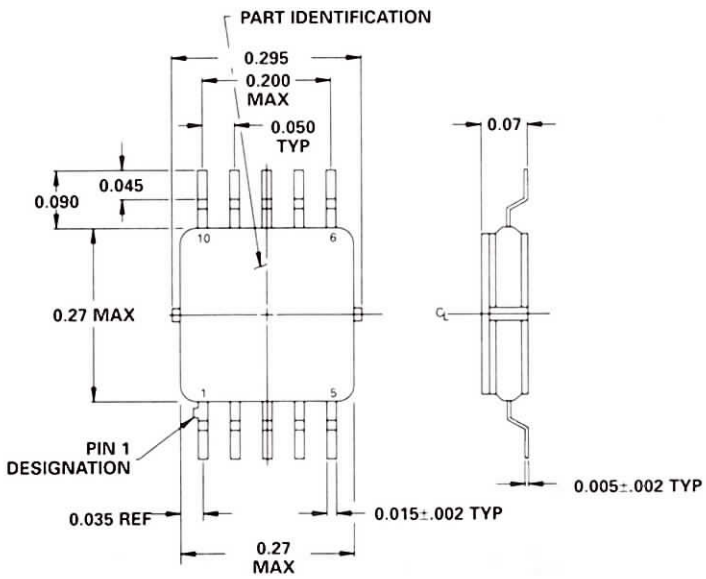

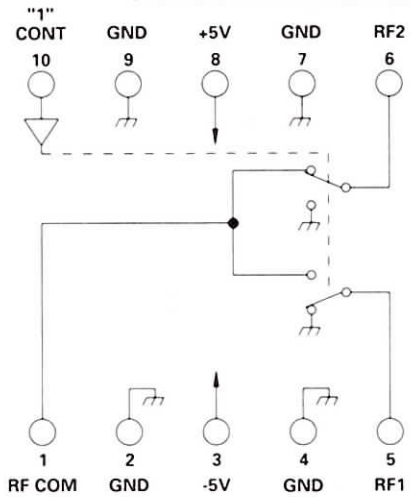

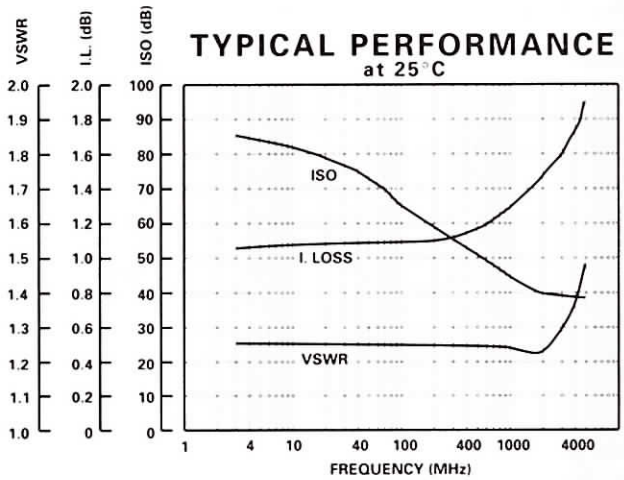

GUARANTEED PERFORMANCE

Parameter		Min	Typ	Max	Units	Conditions
Operating Frequency		DC		2000	MHz	
DC Current			13	25	mA	At +5 VDC Supply
			10	20	mA	At -5 VDC Supply
Control Type			TTL			1 Line
						Logic "0" = RF Com to RF 1
						Logic "1" = RF Com to RF 2
Control Current	*High*		10	±50	µA	VIH = +2.7V
	Low		10	±50	µA	VIL = +0.5V
Insertion Loss			1.5	2.0	dB	DC - 1 GHz
			1.8	2.5	dB	1 - 2 GHz
Isolation		60	68		dB	DC - 100 MHz
		40	50		dB	100 MHz - 500 MHz
		35	42		dB	500 MHz - 1 GHz
		30	37		dB	1 GHz - 2 GHz
VSWR			1.3/1	1.5/1		DC - 1 GHz
			1.5/1	1.7/1		1 GHz - 2 GHz
Impedance			50		OHMS	
Switching Speed			13	25	nSEC	50% TTL to 90% / 10% RF
Transition (Rise/Fall) Time			3	5	nSEC	10% / 90% or 90% / 10% RF
Switching (Video) Transients			11		mV	Peak Value
Intercept Points	*2nd*	+50	+55		dBm	150 MHz / 450 MHz
	3rd	+23	+26		dBm	50 MHz / 70 MHz
RF Power	*Operate*		+4	0	dBm	0.1 dB Comp DC - 10 MHz
			+8	+5	dBm	10 MHz - 100 MHz
			+11	+7	dBm	100 MHz - 2 GHz
				+30	dBm	No Damage
Operating Temperature		-55	+25	+85	C	TA

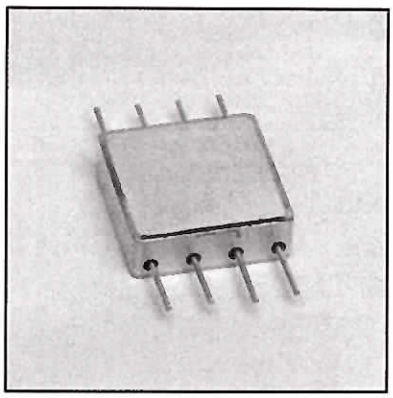

MODEL NUMBER DS0860

GaAs SP2T

FEATURES

- 10 - 1000 MHz
- 40 nSec Switching Speed
- 48 mV Transients
- Non-Reflective
- TTL Driver
- Ultra Small 0.380 Sq. Flat Pack
- Low Cost

SP2T

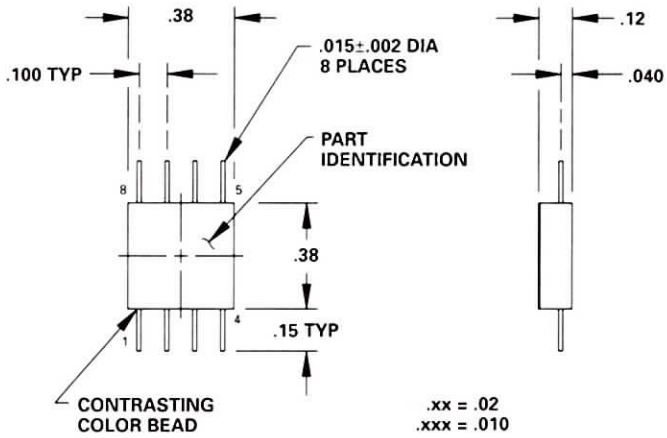

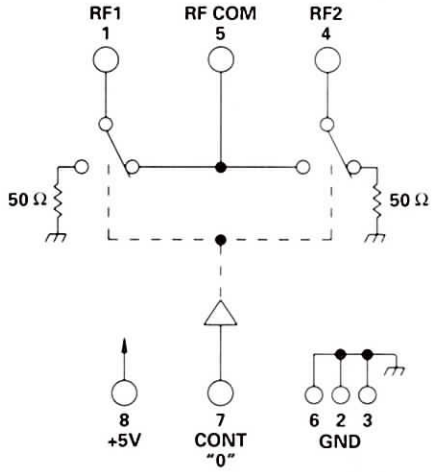

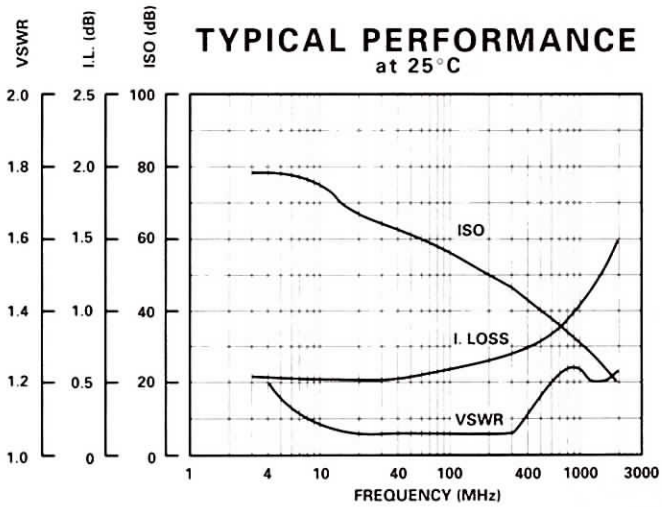

GUARANTEED PERFORMANCE

Parameter		Min	Typ	Max	Units	Conditions
Operating Frequency		10		1000	MHz	
DC Current			0.2	1	mA	At +5 VDC Supply
Control Type			TTL			1 Line Logic "0" = RF COM to RF1 Logic "1" = RF COM to RF2
Control Current	*High*		0	±20	µA	VIH = +2.7V
	Low		0	±20	µA	VIL = +0.5V
Insertion Loss			0.7	1.0	dB	10 - 150 MHz
			1.1	1.5	dB	150 - 1000 MHz
Isolation		50	55		dB	10 - 150 MHz
		40	47		dB	150 - 300 MHz
		25	32		dB	300 - 1000 MHz
VSWR	*Thru*		1.2/1	1.4/1		
	Termination		1.4/1	2/1		
Impedance			50		OHMS	
Switching Speed			40	70	nSEC	50% TTL to 90% / 10% RF
Transition (Rise/Fall) Time			15		nSEC	90% / 10% or 10% / 90% RF
Switching (Video) Transients			48		mV	Peak Value
Intercept Points	*2nd*		+88		dBm	70 MHz / 50 MHz
	3rd		+47		dBm	35 MHz / 50 MHz
RF Power	*Operate*		+16	+10	dBm	10 - 100 MHz
			+24	+20	dBm	100 - 1000 MHz 0.1 dB Comp
	No Damage			+27	dBm	
Operating Temperature		-55	+25	+125	°C	TA

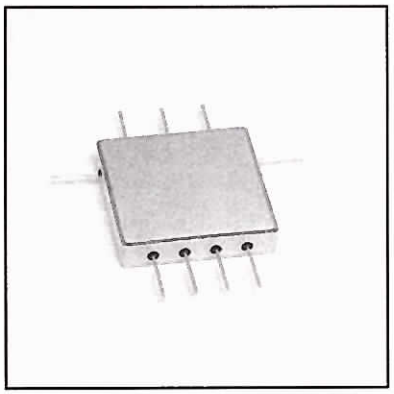

MODEL NUMBER DS0962

GaAs SP2T

FEATURES

- 5 - 1000 MHz
- 0.5 dB Insertion Loss
- 70 dB Isolation
- TTL Driver
- Non-Reflective
- .750 Sq. Flat Pack

SP2T

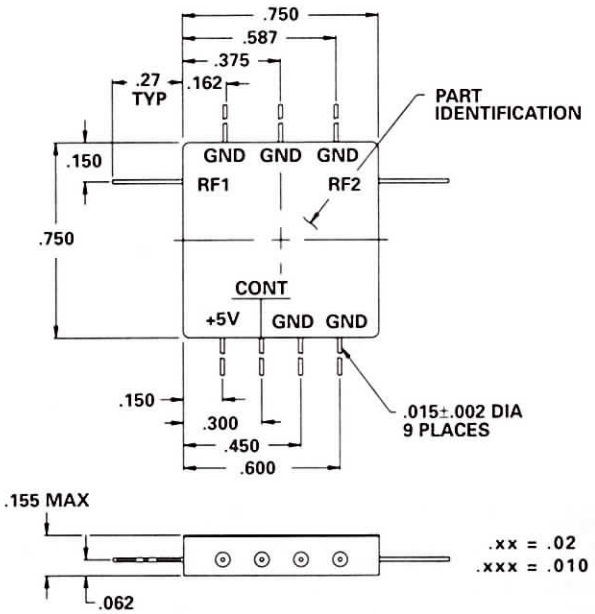

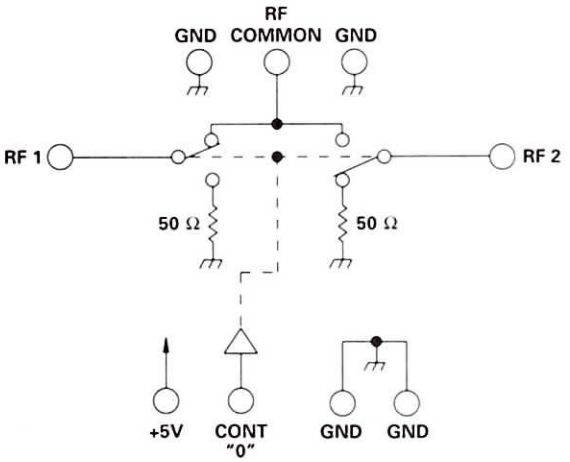

TYPICAL PERFORMANCE
at 25°C

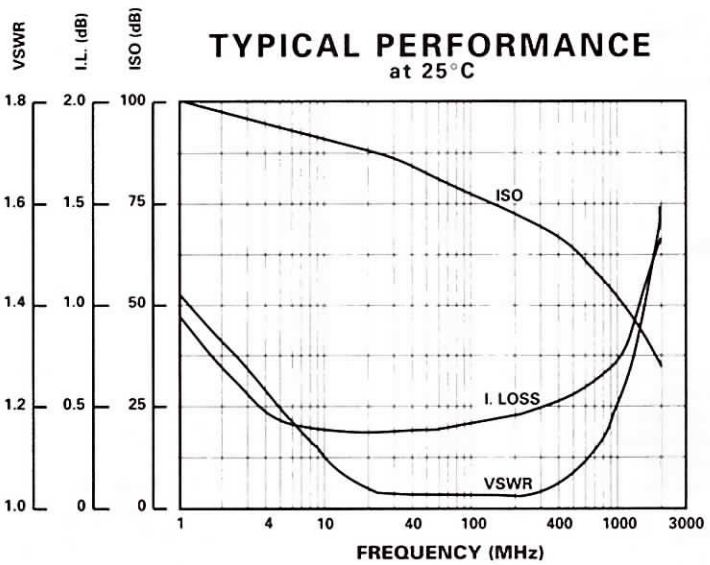

GUARANTEED PERFORMANCE

Parameter		Min	Typ	Max	Units	Conditions
Operating Frequency		5		1000	MHz	
DC Current			0.3	1	mA	At +5 VDC Supply
Control Type			TTL			1 Line
						Logic "1" = RF COM to RF2
Control Current	*High*		0	±20	µA	VIH = +2.7V
	Low		0	±20	µA	VIL = +0.5V
Insertion Loss			0.5	0.7	dB	5 - 200 MHz
			0.7	1.0	dB	200 - 1000 MHz
Isolation		60	69		dB	5 - 200 MHz
		50	58		dB	200 - 700 MHz
		45	53		dB	700 - 1000 MHz
VSWR	*Thru*		1.2/1	1.4/1		
	Termination		1.2/1	1.4/1		
Impedance			50		OHMS	
Switching Speed			72	100	nSEC	50% TTL to 90% / 10% RF
Transition (Rise/Fall) Time			24	70	nSEC	90% / 10% or 10% / 90% RF
Switching (Video) Transients			8	50	mV	Peak Value
Intercept Points	*2nd*		+82		dBm	70 MHz / 50 MHz
	3rd		+51		dBm	35 MHz / 50 MHz
RF Power	*Operate*		+19	+13	dBm	0.1 dB Compression
	No Damage			+30	dBm	
Operating Temperature		-55	+25	+125	°C	TA

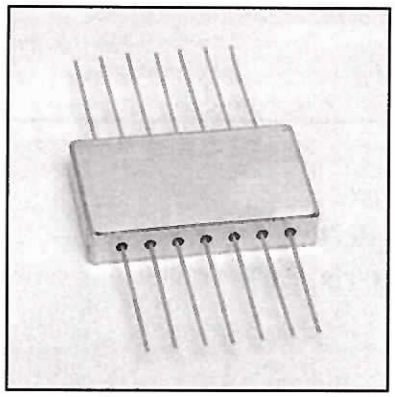

MODEL NUMBER DSW28000

GaAs SP2T

FEATURES

- 5- 2000 MHz
- 30 nSec Switching Speed
- 13 mV Transients
- 1.6 mA @ +5 VDC
- 14 Pin Flatpack

SP2T

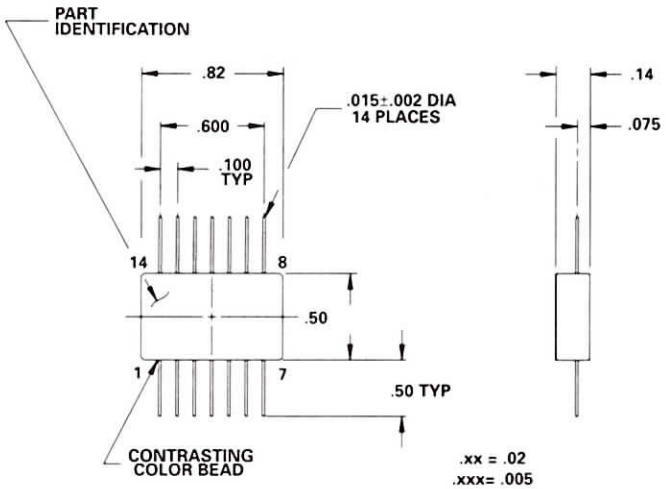

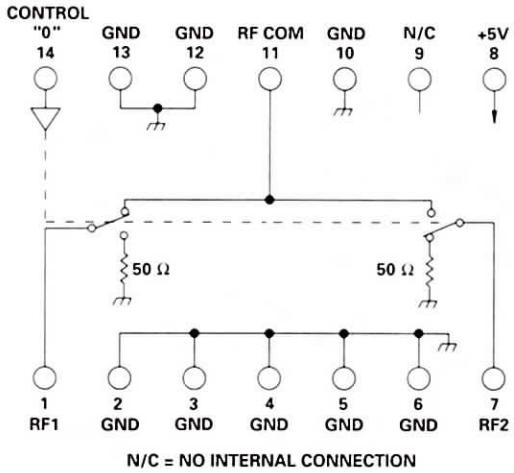

TYPICAL PERFORMANCE

at 25°C

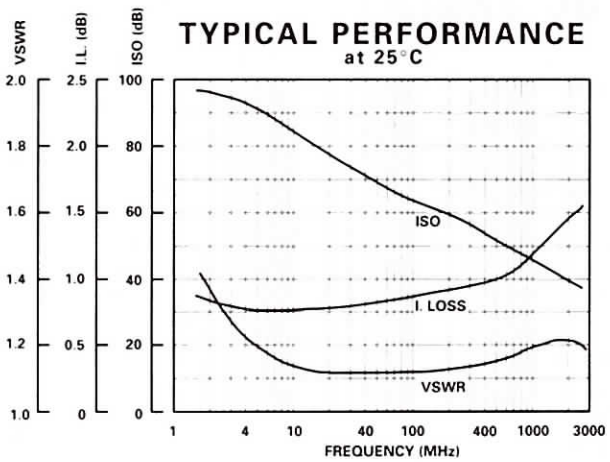

GUARANTEED PERFORMANCE

Parameter		Min	Typ	Max	Units	Conditions
Operating Frequency		5		2000	MHz	
DC Current			1.6	5	mA	At +5 VDC Supply
Control Type			TTL			1 Line
						Logic "0" = RF COM to RF1
						Logic "1" = RF COM to RF2
Control Current	*High*		1	±40	µA	VIH = +3.0V
	Low		1	±40	µA	VIL = +0.5V
Insertion Loss			1.0	1.4	dB	5 - 500 MHz
			1.2	1.6	dB	500 - 1000 MHz
			1.4	2.0	dB	1000 - 2000 MHz
Isolation		53	57		dB	5 - 300 MHz
		45	53		dB	300 - 500 MHz
		40	46		dB	500 - 1000 MHz
		35	40		dB	1000 - 2000 MHz
VSWR	*Thru*		1.2/1	1.4/1	dB	5 - 500 MHz
			1.2/1	1.5/1	dB	500 - 1000 MHz
			1.2/1	1.9/1	dB	1000 - 2000 MHz
	Termination		1.3/1	1.4/1	dB	5 - 500 MHz
			1.2/1	1.5/1	dB	500 - 1000 MHz
			1.2/1	1.9/1	dB	1000 - 2000 MHz
Impedance			50		OHMS	
Switching Speed			24	30	nSEC	50% TTL to 90% / 10% RF
Transition (Rise/Fall) Time			8	10	nSEC	90% / 10% or 10% / 90% RF
Switching (Video) Transients			13	120	mV	Peak Value
Intercept Points	*2nd*	+52	+62		dBm	150 MHz / 350 MHz 50 - 2000 MHz
	3rd	+34	+48		dBm	200 MHz / 350 MHz 50 - 2000 MHz
RF Power	*Operate*		+17	+10	dBm	1.0 dB Comp 5 - 50 MHz
			+21	+17	dBm	1.0 dB Comp 50 - 500 MHz
			+22	+21	dBm	1.0 dB Comp 500 - 2000 MHz
	No Damage			+24	dBm	
Operating Temperature		-55	+25	+85	°C	TA

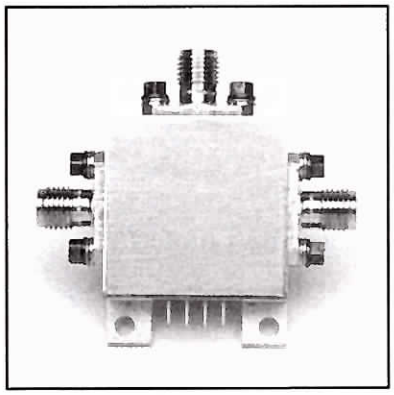

MODEL NUMBER DSW26189

GaAs SP2T

FEATURES

- 0.1 - 150 MHz
- High Intercept Points
- 2.5 mA, +15 VDC
- 60 dB Isolation

SP2T

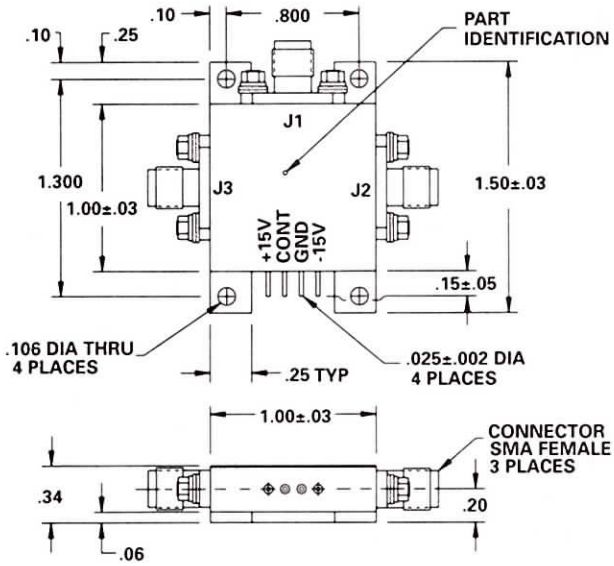

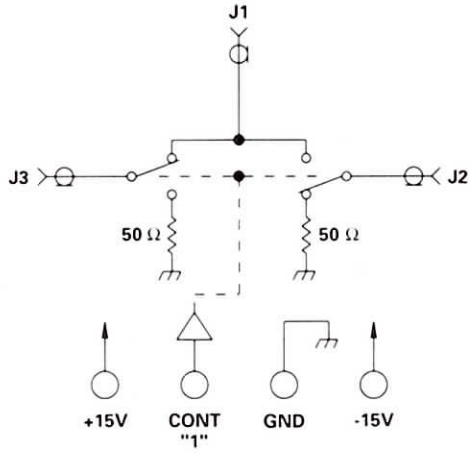

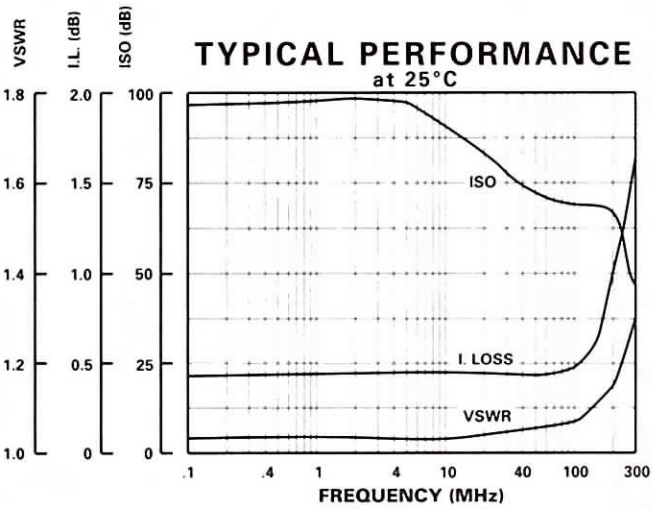

LOGIC TABLE	
"0"	J1 To J2
"1"	J1 To J3

GUARANTEED PERFORMANCE

Parameter		Min	Typ	Max	Units	Conditions
Operating Frequency		0.1		150	MHz	
DC Current			2.5	10	mA	At +15 VDC Supply
			1.5	10	mA	At -15 VDC Supply
Control Type			TTL			See Logic Chart
Control Current	*High*		1.0	±100	µA	VIH = +2.7V
	Low		1.0	±100	µA	VIL = +0.5V
Insertion Loss			0.6	1.0	dB	
Isolation		60	64		dB	
VSWR	*Thru*		1.10/1	1.5/1		
	Termination		1.08/1	1.5/1		
Impedance			50		OHMS	
Switching Speed			0.15	5	µSEC	50% TTL to 90% / 10% RF
Transition (Rise/Fall) Time			0.02		µSEC	10% / 90% or 90% / 10% RF
Switching (Video) Transients			+81		dBm	In 3 KHz BW at 1KHz PRF
Intercept Points	*2nd*	+81	+110		dBm	
	3rd	+36	+56		dBm	
RF Power	*Operate*		+22	+18	dBm	1.0 dB Compression
	No Damage			+30	dBm	
Operating Temperature		-55	+25	+125	°C	TA

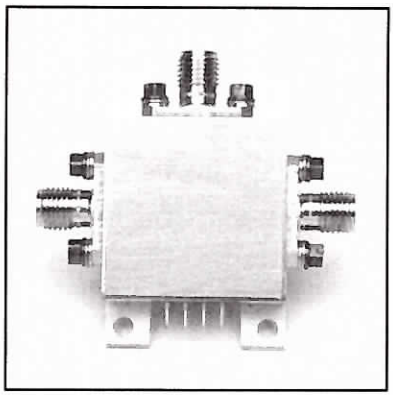

MODEL NUMBER CDS0622

PIN Diode SP2T

FEATURES

- 20 - 2000 MHz
- 70 dB Isolation up to 1 GHz
- TTL Driver
- Non-Reflective
- Replaceable SMA Connectors

SP2T

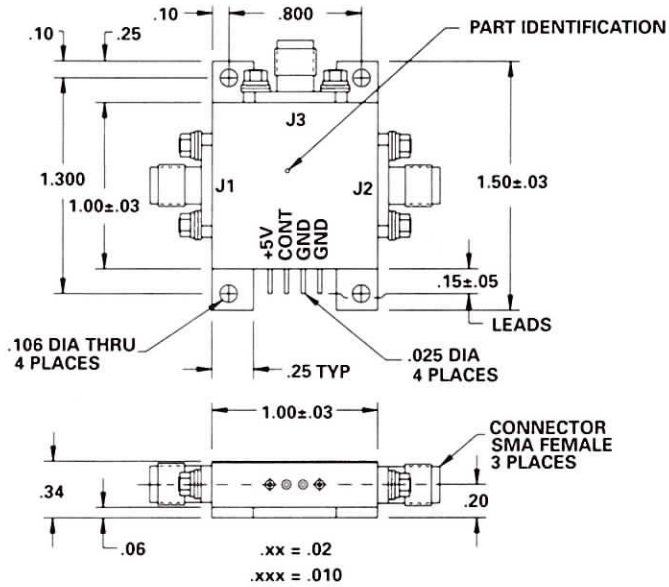

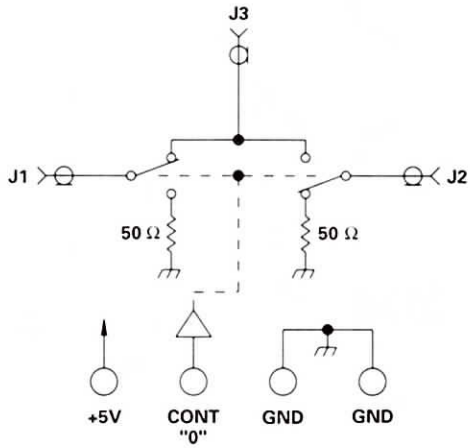

TYPICAL PERFORMANCE
at 25°C

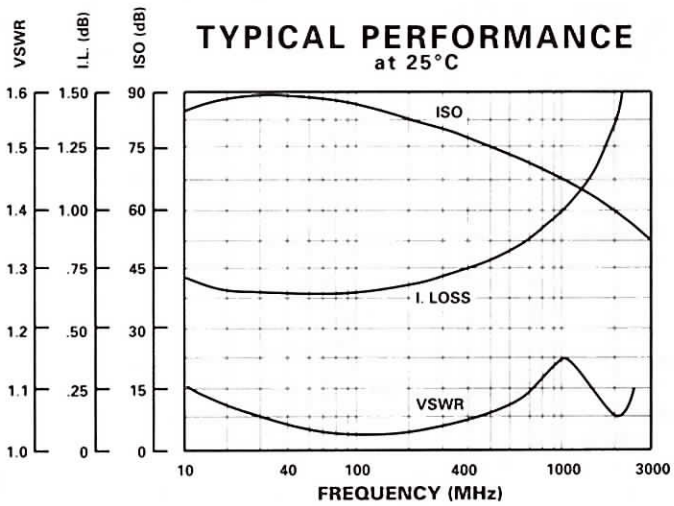

GUARANTEED PERFORMANCE

Parameter		Min	Typ	Max	Units	Conditions
Operating Frequency		20		2000	MHz	
DC Current			8.5	12	mA	At +5 VDC Supply
Control Type			TTL			1 Line Logic "0" = J3 - J1 Logic "1" = J3 - J2
Control Current	*High*		0	±10	µA	VIH = +2.7V
	Low		0	±10	µA	VIL = +0.5V
Insertion Loss			.74	1.0	dB	20 - 100 MHz
			.90	1.25	dB	100 - 1000 MHz
			1.30	2.0	dB	1000 - 2000 MHz
Isolation		75	85		dB	20 - 100 MHz
		60	75		dB	100 - 1000 MHz
		50	60		dB	1000 - 2000 MHz
VSWR	*Thru*		1.15/1	1.3/1		
	Termination		1.15/1	1.5/1		
Impedance			50		OHMS	
Switching Speed			1.5	3	µSEC	50% TTL to 90% / 10% RF
Transition (Rise/Fall) Time			0.3		µSEC	90% / 10% or 10% / 90% RF
Switching (Video) Transients			700		mV	Peak Value
Intercept Points	*2nd*		+69		dBm	50 MHz / 70 MHz
	3rd		+37		dBm	50 MHz / 35 MHz
RF Power	*Operate*		+14	+10	dBm	20 - 100 MHz
			+21	+17	dBm	100 - 2000 MHz
	No Damage			+27	dBm	
Operating Temperature		-55	+25	+125	°C	TA

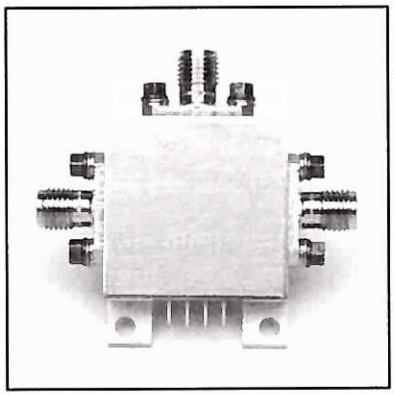

MODEL NUMBER CDS0667

PIN Diode SP2T

FEATURES

- 300-3000 MHz
- 80 dB Isolation up to 1 GHz
- 70 dB Isolation up to 2 GHz
- TTL Driver
- Non-Reflective
- Replaceable SMA Connectors

SP2T

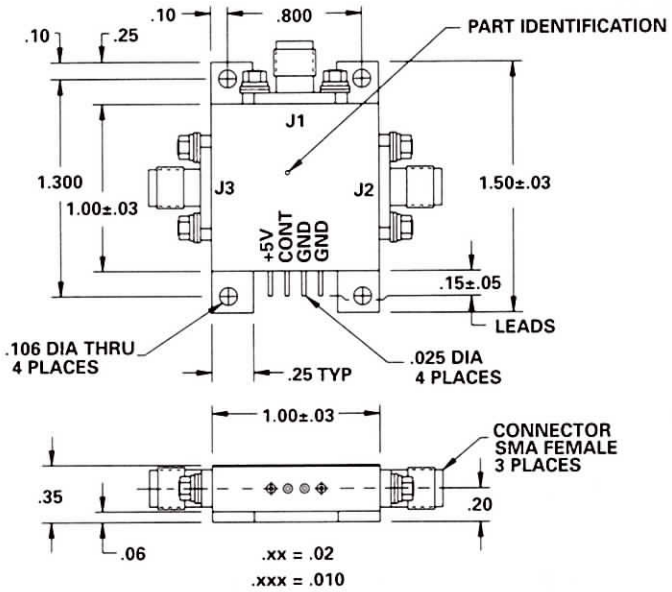

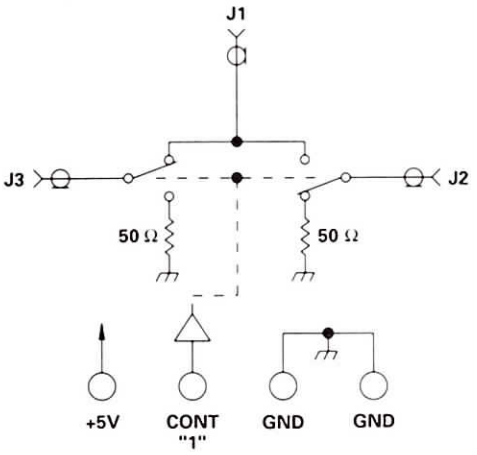

TYPICAL PERFORMANCE
at 25°C

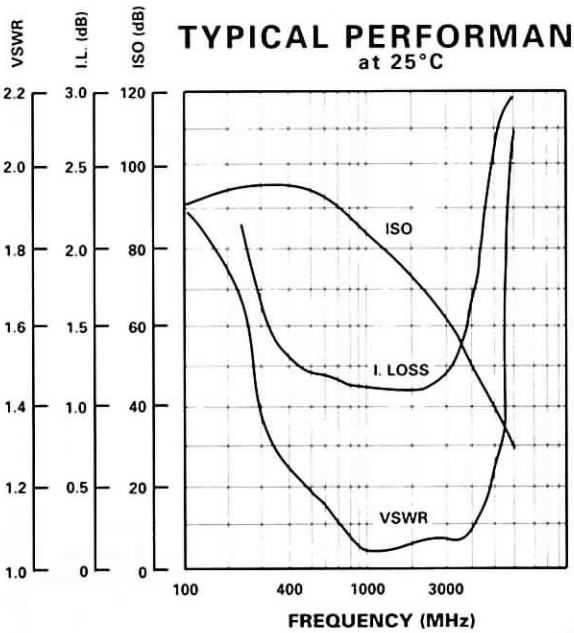

GUARANTEED PERFORMANCE

Parameter		Min	Typ	Max	Units	Conditions
Operating Frequency		300		3000	MHz	
DC Current			12	20	mA	At +5 VDC Supply
Control Type			TTL			1 Line Logic "0" = J1 - J2 Logic "1" = J1 - J3
Control Current	*High*		1	±10	µA	VIH = +2.7V
	Low		1	±10	µA	VIL = +0.5V
Insertion Loss Flatness			1.3	2.0	dB	
			±0.15	±0.25	dB	700 - 2000 MHz
Isolation		70	80		dB	300 - 1000 MHz
		60	70		dB	1000 - 2000 MHz
		50	60		dB	2000 - 3000 MHz
VSWR	*Thru*		1.2/1	1.5/1		
	Termination		1.2/1	1.5/1		
Impedance			50		OHMS	
Switching Speed			300	500	nSEC	50% TTL to 90% / 10% RF
Transition (Rise/Fall) Time			130	300	nSEC	90% / 10% or 10% / 90% RF
Switching (Video) Transients			140		mV	Peak Value
Intercept Points	*2nd*	+50	+80		dBm	275 MHz / 475 MHz
	3rd	+30	+38		dBm	200 MHz / 500 MHz
RF Power	*Operate*		+20	+15	dBm	0.1 dB Compression
	No Damage			+27	dBm	
Operating Temperature		-55	+25	+125	°C	TA

DAICO *Industries*

310.507.3242 • FAX 310.507.5701 • www.daico.com

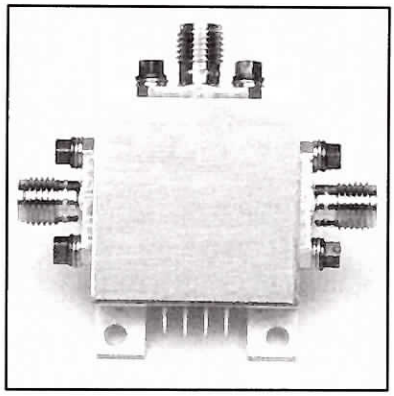

MODEL NUMBER CDS0912

PIN Diode SP2T

FEATURES

- 20-4000 MHz
- < 1 dB Insertion Loss up to 3 GHz
- TTL Driver
- Non-Reflective
- Replaceable SMA Connectors

SP2T

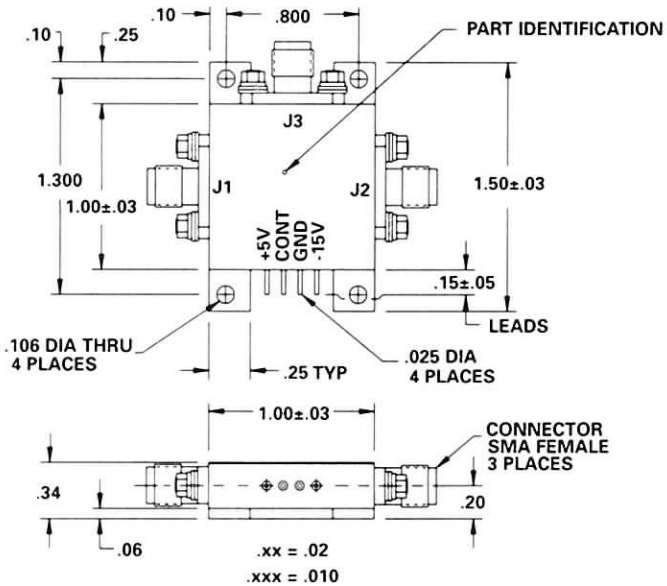

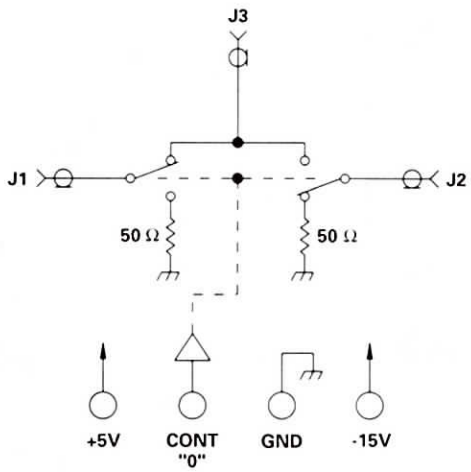

TYPICAL PERFORMANCE
at 25°C

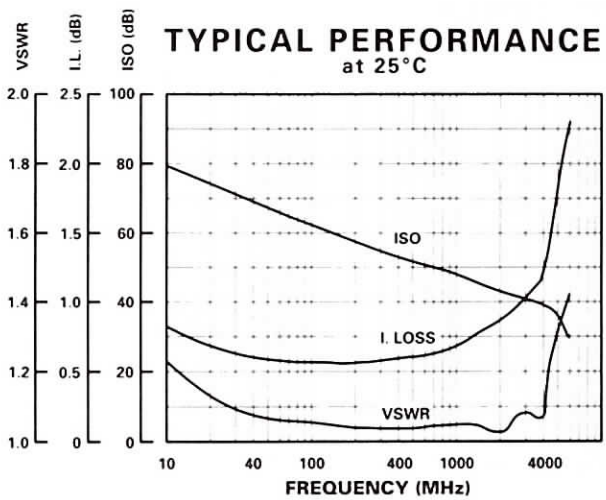

GUARANTEED PERFORMANCE

Parameter		Min	Typ	Max	Units	Conditions
Operating Frequency		20		4000	MHz	
DC Current			13	20	mA	At +5 VDC Supply
			15	20	mA	At -15 VDC Supply
Control Type			TTL			1 Line
						Logic "0" = J1 - J3
						Logic "1" = J2 - J3
Control Current	*High*		10	±40	µA	VIH = +2.7V
	Low		10	±40	µA	VIL = +0.5V
Insertion Loss			1.3	1.7	dB	
	Insertion Loss Flatness		0.7	±1	dB	
	Amplitude Balance		0.1	±0.5	dB	
Isolation		42	52		dB	20 - 1000 MHz
		36	46		dB	1000 - 2000 MHz
		30	40		dB	2000 - 4000 MHz
VSWR	*Thru*		1.2/1	1.5/1		
	Termination		1.2/1	1.5/1		
Impedance			50		OHMS	
Switching Speed			3	10	µSEC	50% TTL to 90% / 10% RF
Transition (Rise/Fall) Time			0.5		µSEC	90% / 10% or 10% / 90% RF
Switching (Video) Transients			0.5		V	Peak Value
Intercept Points	*2nd*	+60	+82		dBm	70 MHz / 50 MHz
	3rd	+37	+46		dBm	35 MHz / 50 MHz
RF Power	*Operate*		+20	+15	dBm	0.1 dB Comp. Below 100 MHz
			+23	+20	dBm	0.1 dB Comp. Above 100 MHz
	No Damage			+30	dBm	
Operating Temperature		-55	+25	+125	°C	TA

MODEL NUMBER DSW26176	Diode SP2T

FEATURES

- 500-2500 MHz
- High Isolation
- 60 dB Isolation
- Low Insertion Loss, 1.20 dB

SP2T

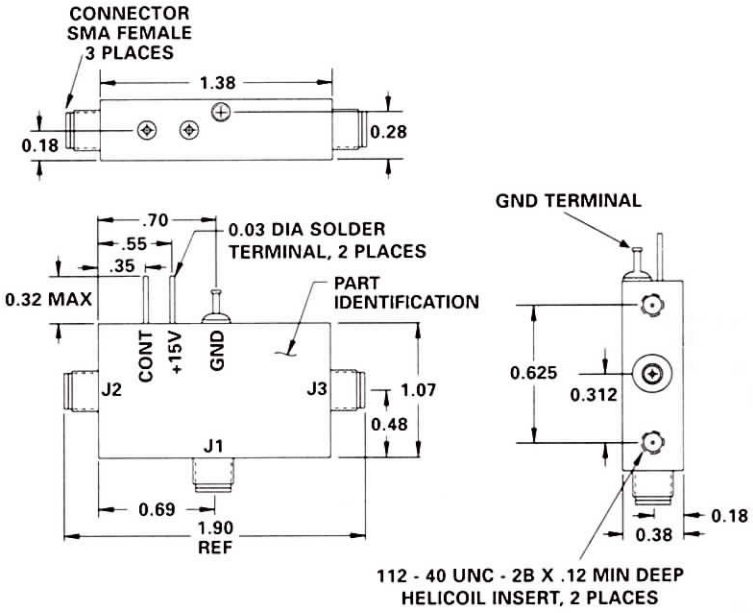

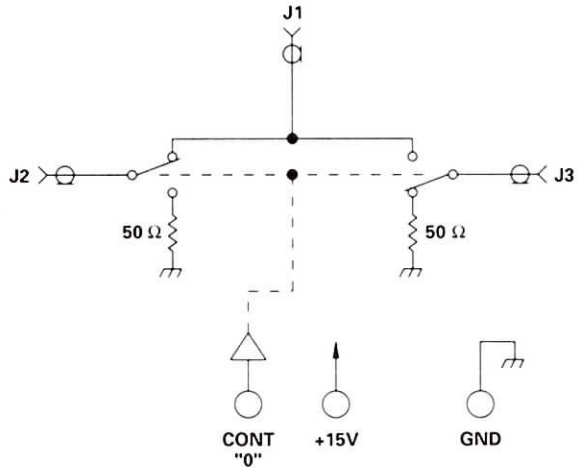

TYPICAL PERFORMANCE
at 25°C

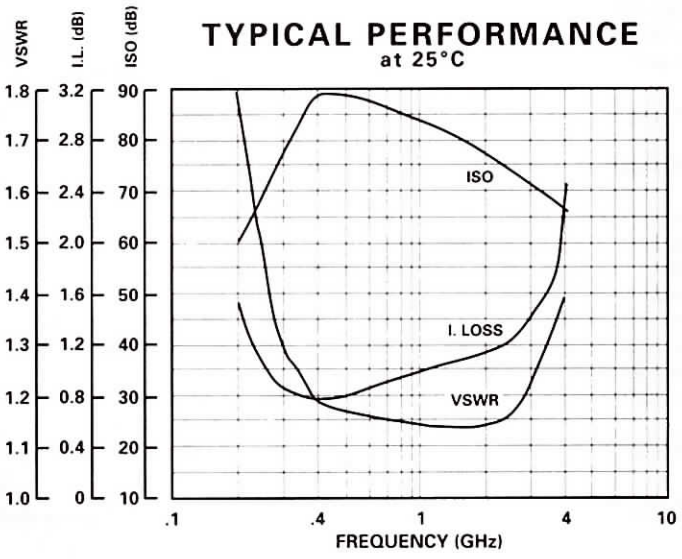

GUARANTEED PERFORMANCE

Parameter		Min	Typ	Max	Units	Conditions
Operating Frequency		500		2500	MHz	
DC Current			39	50	mA	At +5 VDC Supply
Control Type			TTL			1 Line, J1 - J2 = Logic "0"
Control Current	*High*		±1.0	20	µA	VIH = +2.7V
	Low		±1.0	-400	µA	VIL = +0.5V
Isolation		60	75		dB	
Insertion Loss			1.20	1.5	dB	
Amplitude Balance			±0.01	±0.3	dB	Reference Between the Calibration Port and any Input Port of the Switch
Phase Tracking			±0.25	2	DEG	Port to Port (Max Differential)
VSWR	*Thru*		1.20/1	1.4/1		
	Termination		1.15/1	1.5/1		
Impedance			50		OHMS	
Switching Speed			8.4	10	µSEC	50% TTL to 90% / 10% RF
Transition (Rise/Fall) Time			5.8	10	µSEC	10% / 90% or 90% / 10% RF
Switching (Video) Transients			20	200	mV	Peak to Peak Value
Intercept Points	*2nd*	+69	+71		dBm	900.3 MHz / 400.3 MHz
	3rd	+37	+39		dBm	450.15 MHz / 400.3 MHz
RF Power	*Operate*		+23	+20	dBm	0.1 dB Compression
	No Damage			+30	dBm	
Operating Temperature		-55	+25	+125	°C	TA

MODEL NUMBER CDS0979	PIN Diode SP2T

FEATURES

- 700 - 3000 MHz
- 60 dB Isolation
- TTL Driver
- 45 nSec Switching Speed
- SMA Connectors

SP2T

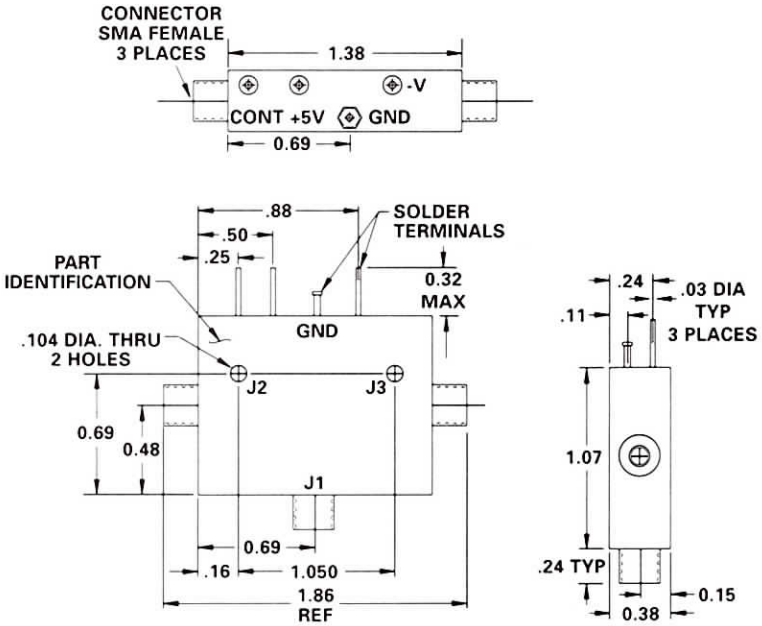

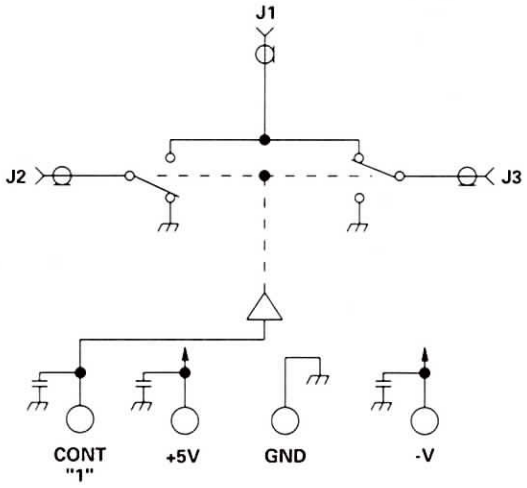

GUARANTEED PERFORMANCE

Parameter		Min	Typ	Max	Units	Conditions
Operating Frequency		700		3000	MHz	
DC Current			18	25	mA	At +5 VDC Supply
			7	15	mA	At -12 to -15 VDC Supply
Control Type			TTL			1 Line
						Logic "1" = J1 - J3
Control Current	*High*		1	±40	µA	VIH = +2.7V
	Low		1	±40	µA	VIL = +0.5V
Insertion Loss			0.8	1.2	dB	
Isolation		55	61		dB	
VSWR	*Thru*		1.15/1	1.3/1		
Impedance			50		OHMS	
Switching Speed			45	100	nSEC	50% TTL to 10% / 90% RF
Transition (Rise/Fall) Time			25		nSEC	10% / 90% or 90% / 10% RF
Switching (Video) Transients			2.8		V	Peak
Intercept Points	*2nd*		+70		dBm	500 MHz / 400 MHz
	3rd		+43		dBm	250 MHz / 400 MHz
RF Power	*Operate*		+34	+27	dBm	0.1 dB Compression
	No Damage			+33	dBm	
Operating Temperature		-55	+25	+85	°C	TA

TYPICAL PERFORMANCE
at 25°C

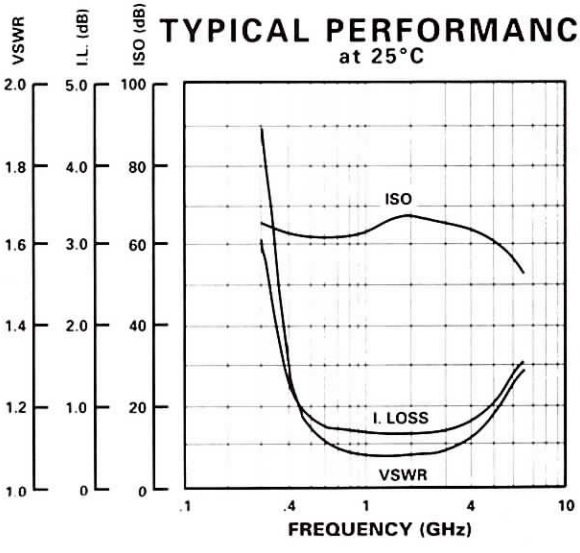

MODEL NUMBER 100C1492	Medium Power PIN Diode SP2T

FEATURES

- 100 - 500 MHz
- 0.2 dB Insertion Loss
- 100 Watts CW
- TTL Driver
- Type N Connectors

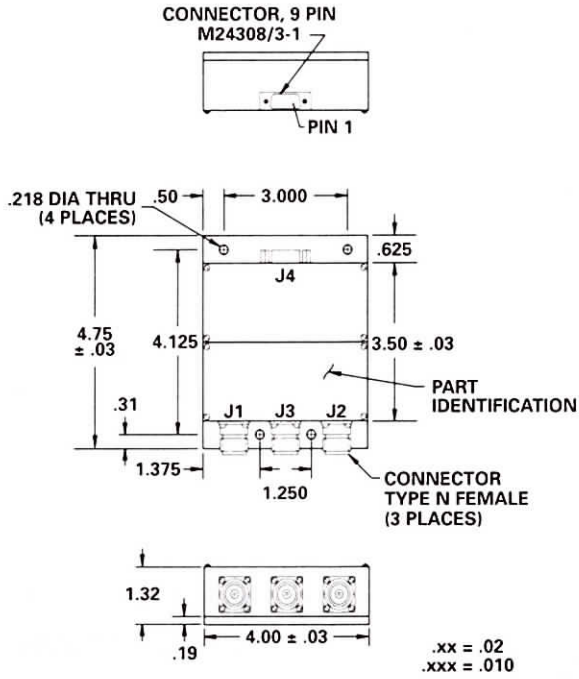

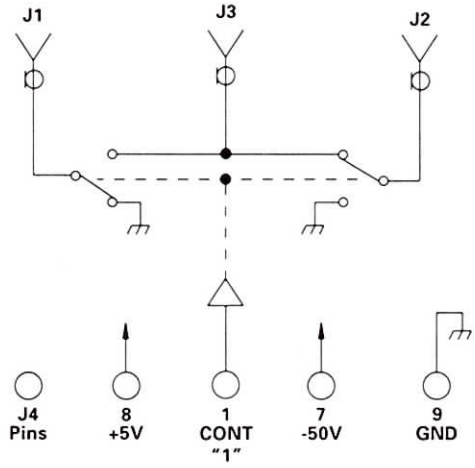

TYPICAL PERFORMANCE
at 25°C

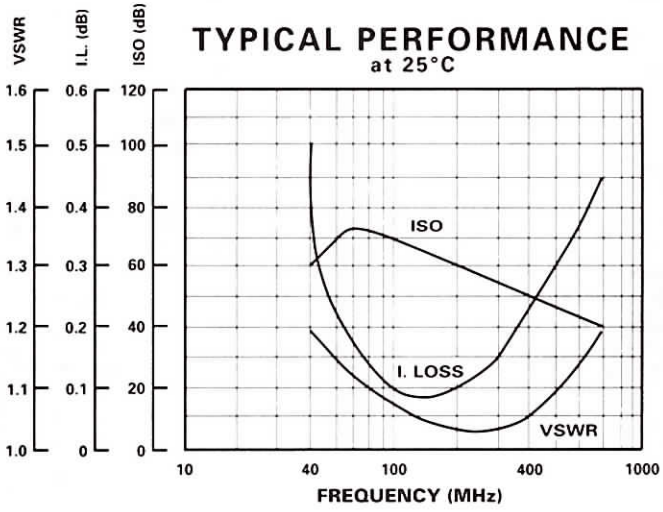

GUARANTEED PERFORMANCE

Parameter		Min	Typ	Max	Units	Conditions
Operating Frequency		100		500	MHz	
DC Current			300		mA	At +5 VDC Supply
			10		mA	At -50 VDC Supply
Control Type			TTL			1 Line
						Logic "0" = J3 - J1
						Logic "1" = J3 - J2
Control Current	*High*			1.2	mA	VIH = +2.7V
	Low			5.0	mA	VIL = +0.5V
Insertion Loss			0.25	0.4	dB	
Isolation		60	63		dB	100 - 200 MHz
		45	51		dB	200 - 500 MHz
VSWR	*Thru*		1.1/1	1.25/1		
Impedance			50		OHMS	
Switching Speed				30	µSEC	50% TTL to 90% / 10% RF
RF Power	*Operate*			100	W	CW
Operating Temperature		-55	+25	+85	°C	TA

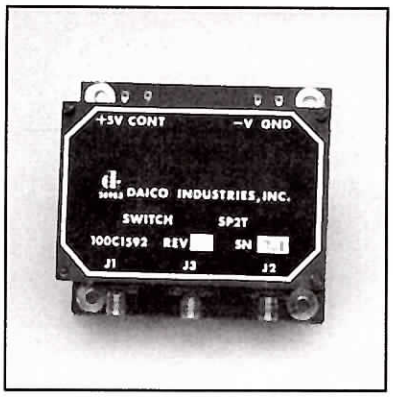

MODEL NUMBER 100C1592

Medium Power PIN Diode SP2T

FEATURES

- 20 - 500 MHz
- 0.4 dB Insertion Loss
- 20 Watts CW
- TTL Driver
- SMA Connectors

SP2T

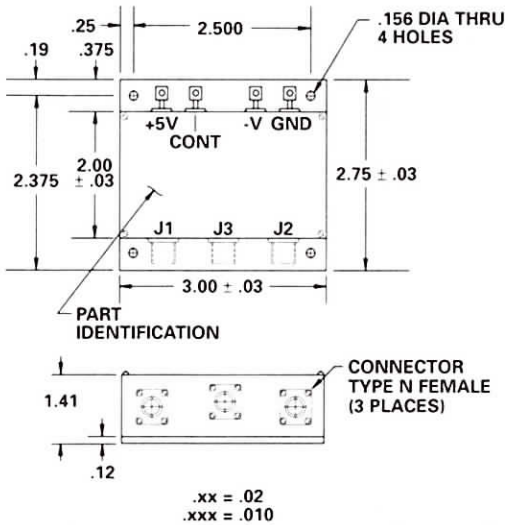

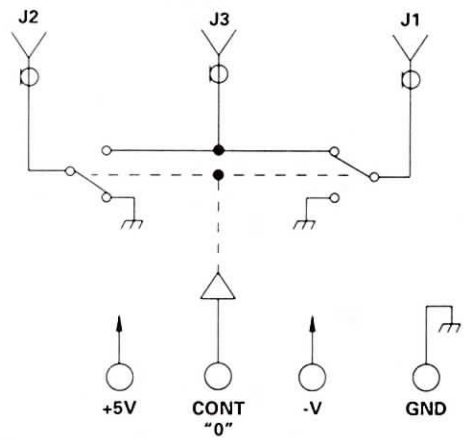

TYPICAL PERFORMANCE
at 25°C

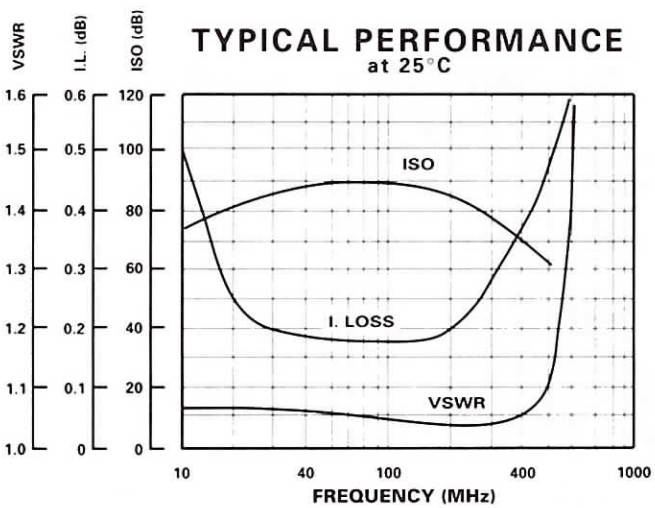

GUARANTEED PERFORMANCE

Parameter		Min	Typ	Max	Units	Conditions
Operating Frequency		20		500	MHz	
DC Current			220	300	mA	At +5 VDC Supply
			20	40	mA	At -15 to -30 VDC Supply
Control Type			TTL			1 Line
						Logic "0" = J3 - J1
						Logic "1" = J3 - J2
Control Current	*High*			1.2	mA	VIH = +2.7V
	Low			-5.0	mA	VIL = +0.5V
Insertion Loss			0.3	0.5	dB	20 - 300 MHz
			0.5	0.75	dB	300 - 500 MHz
Isolation		65	75		dB	20 - 300 MHz
		55	62		dB	300 - 500 MHz
VSWR	*Thru*		1.06/1	1.2/1		20 - 300 MHz
			1.1/1	1.25/1		300 - 500 MHz
Impedance			50		OHMS	
Switching Speed				10	µSEC	50% TTL to 90% / 10% RF
RF Power	*Operate*		20		W	CW
Operating Temperature		-55	+25	+85	°C	TA

MODEL NUMBER 100C1598	High Power PIN Diode SP2T

FEATURES

- 2-32 MHz
- 0.1 dB Insertion Loss
- 500 Watts CW
- TTL Driver
- Type N Connectors

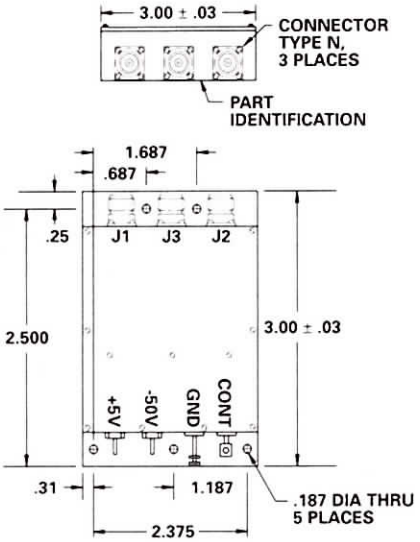

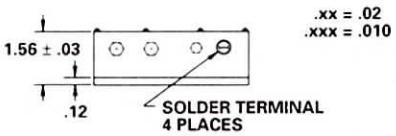

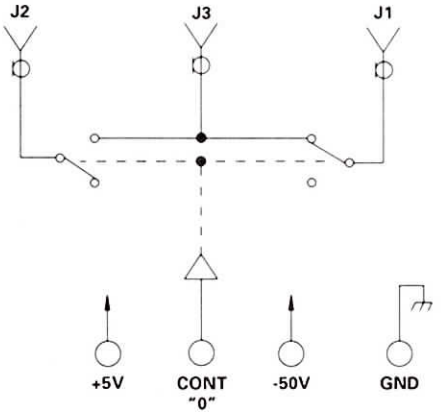

GUARANTEED PERFORMANCE

Parameter		Min	Typ	Max	Units	Conditions
Operating Frequency		2		32	MHz	
DC Current			225	300	mA	At +5 VDC Supply
			5	6	mA	At -50 VDC Supply
Control Type			TTL			1 Line Logic "0" = J3 - J1 Logic "1" = J3 - J2
Control Current	*High*			400	µA	VIH = +2.7V
	Low			-1.6	mA	VIL = +0.5V
Insertion Loss			0.07	0.1	dB	
Isolation		27	30		dB	
VSWR	*Thru*		1.06/1	1.2/1		
Impedance			50		OHMS	
Switching Speed				150	µSEC	50% TTL to 90% / 10% RF
RF Power	*Operate*			500	W	CW
Operating Temperature		-55	+25	+85	°C	TA

TYPICAL PERFORMANCE
at 25°C

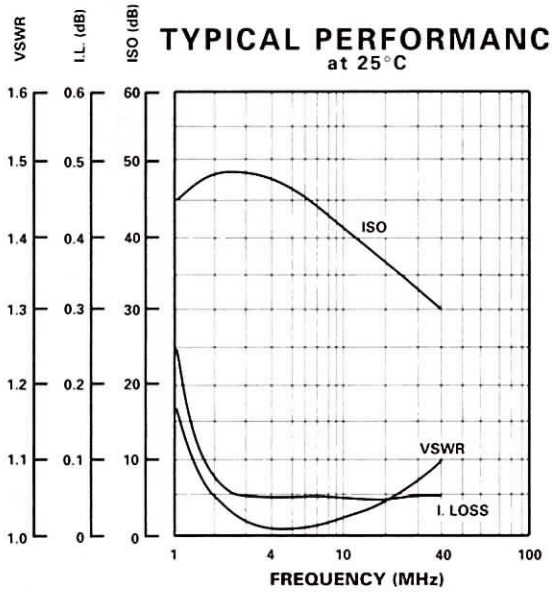

MODEL NUMBER 100C1003

SP2T Relay

FEATURES

- DC-1250 MHz
- 30 Watts CW
- Non-Reflective
- SMA, BNC or TNC Connectors

SP2T

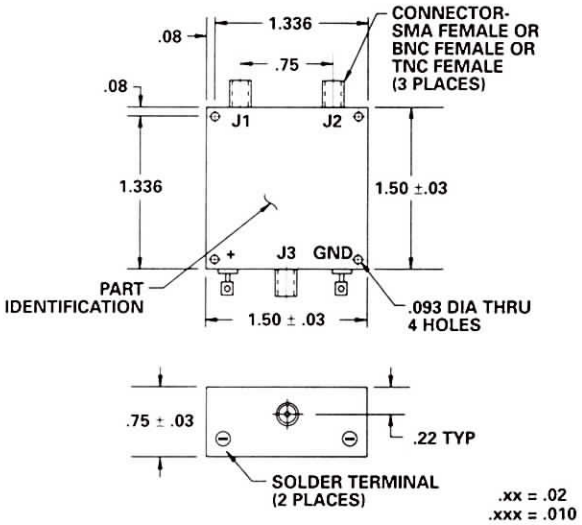

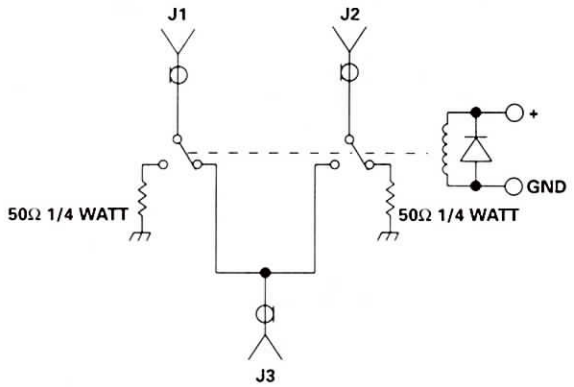

TYPICAL PERFORMANCE

at 25°C

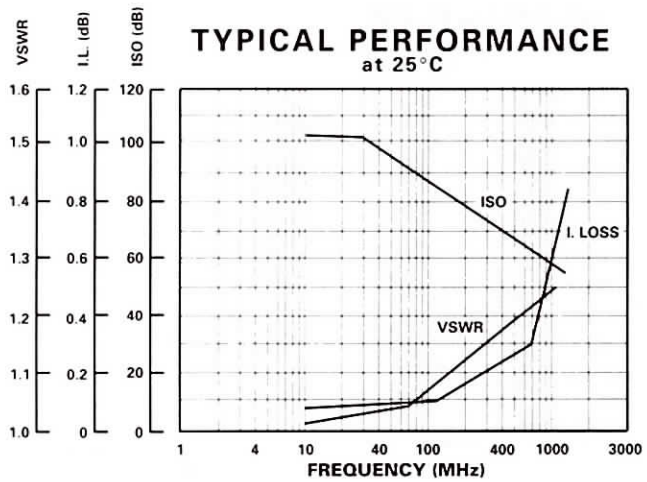

GUARANTEED PERFORMANCE

Parameter		Min	Typ	Max	Units	Conditions
Operating Frequency		DC		1250	MHz	
DC Voltage						See Table
Insertion Loss			0.1	0.2	dB	DC - 150 MHz
			0.25	0.35	dB	150 - 400 MHz
			0.7	1.0	dB	400 - 1250 MHz
Isolation		75	85		dB	DC - 150 MHz
		60	70		dB	150 - 400 MHz
		45	55		dB	400 - 1250 MHz
VSWR	*Thru*		1.07/1	1.15/1		DC - 150 MHz
			1.15/1	1.2/1		150 - 400 MHz
			1.25/1	1.5/1		400 - 1250 MHz
Impedance			50		OHMS	
Switching Speed				5	mSEC	
RF Power	*Operate*			+30	W	CW
Operating Temperature		-54	+25	+71	°C	TA

PART NO. EXAMPLE

100C1003 - TNC - 26

Basic Part Number

Specify Conn. Type (SMA, BNC, TNC)

Specify Coil Voltage (See Table)

CONTROL VOLTAGE TABLE	
Voltage	Current - Typical
6	195 mA
12	96 mA
18	63 mA
26	51 mA

MODEL NUMBER CSW29289	Switch SP2T

FEATURES

- 225-440 MHz
- 5 Watts CW
- 0.27 dB Insertion Loss
- 76 dB Isolation
- +24 Volts Supply
- Non-Reflective

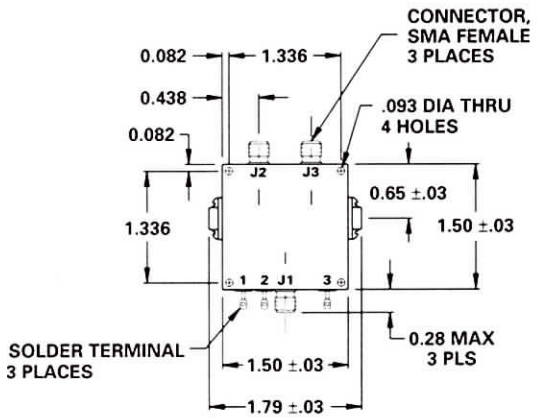

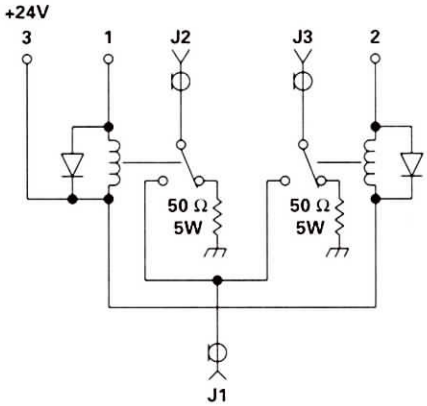

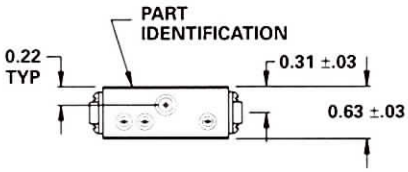

.xx = .02
.xxx = .010

LOGIC TABLE		
Terminal No		RF Path
1	2	
Open	GND	J1 to J3
GND	Open	J1 to J2
Open	Open	J2 and J3 Terminated to Load
GND	GND	Not Allowed

TYPICAL PERFORMANCE

at 25°C

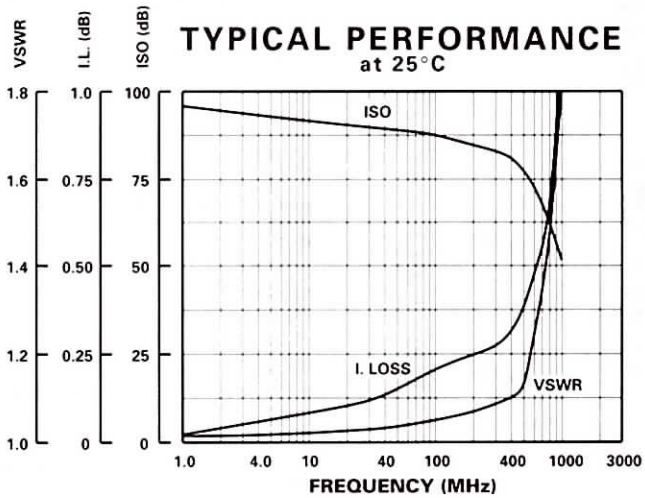

GUARANTEED PERFORMANCE

Parameter	Min	Typ	Max	Units	Conditions
Operating Frequency	225		440	MHz	
DC Current		15	21	mA	At +24 VDC Supply
Insertion Loss		0.27	0.35	dB	240 - 270 MHz
Isolation	45	76		dB	
VSWR		1.08/1	1.2/1		225 - 440 MHz
Impedance		50		OHMS	
Switching Speed		2.2	5	mSec	
RF Power			5	W	
Operating Temperature	0	+25	+75	°C	TA

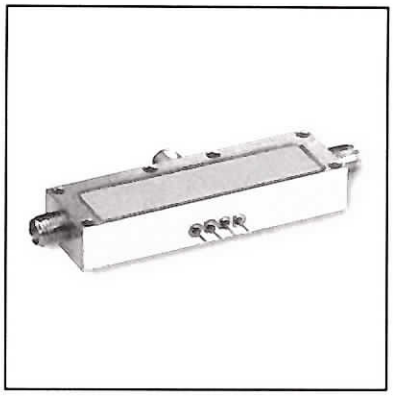

MODEL NUMBER CSW26323

Diode SP2T

FEATURES

- 8000-12000 MHz
- Space Application
- Hermetic Package
- Radiation Tolerant, 100 K Rad
- Connectorized

SP2T

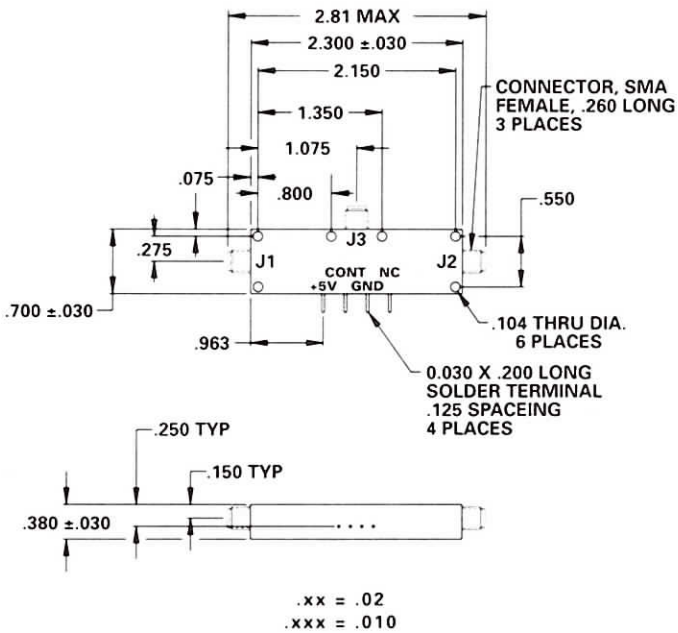

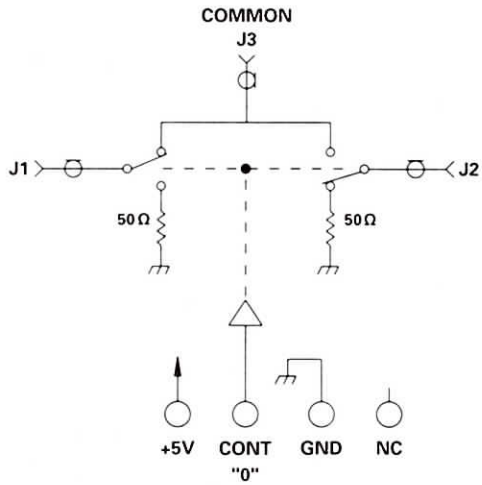

TYPICAL PERFORMANCE

at 25°C

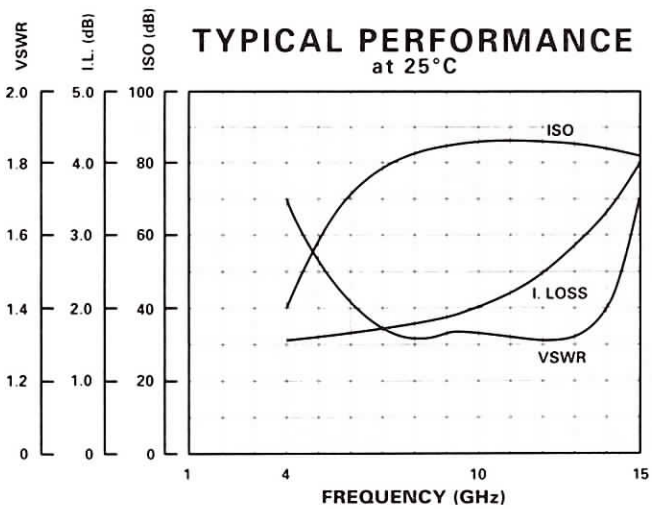

GUARANTEED PERFORMANCE

Parameter		Min	Typ	Max	Units	Conditions
Operating Frequency		8000		12000	MHz	
DC Current		34		45	mA	At +5 VDC Supply
Control Type			TTL			1 Line
Control Current	*High*		0	±10	µA	VIH = +2.0V
	Low		0	±40	µA	VIL = +0.8V
Insertion Loss			2.4	5.0	dB	
Isolation		70	80		dB	
VSWR	*Thru*		1.4/1	2.0/1	dB	
	Termination		1.7/1	2.0/1	dB	
Impedance			50		OHMS	
Switching Speed				200	nSec	50% TTL - 90% / 10% RF
Intercept Points	*2nd*				dBm	
	3rd				dBm	
RF Power	*Operate*			+10	dBm	1.0 dB Compression
	No Damage			+27	dBm	
	Internal Terminations				dBm	
Operating Temperature		-55	+25	+125	°C	TA

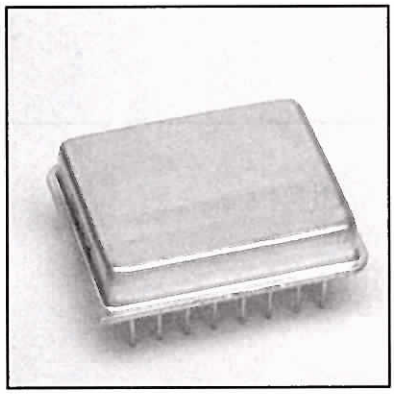

MODEL NUMBER DSW32025

GaAs SP3T

FEATURES

- 5 - 1000 MHz
- High Isolation
- Low DC Power
- Fast Speed 36 nSec typ.
- TTL Control
- 24 Pin DIP
- Broad Band 5 - 1000 MHz

SP3T

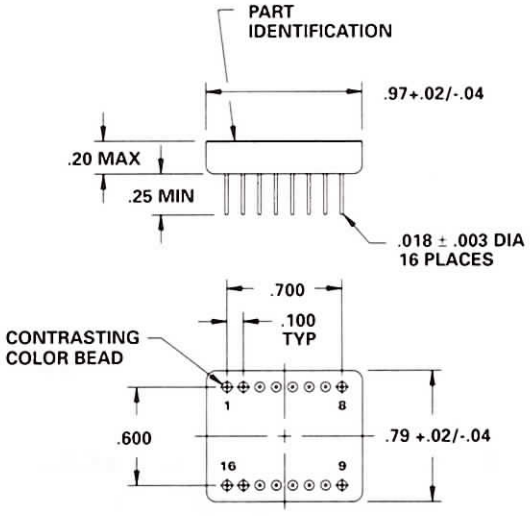

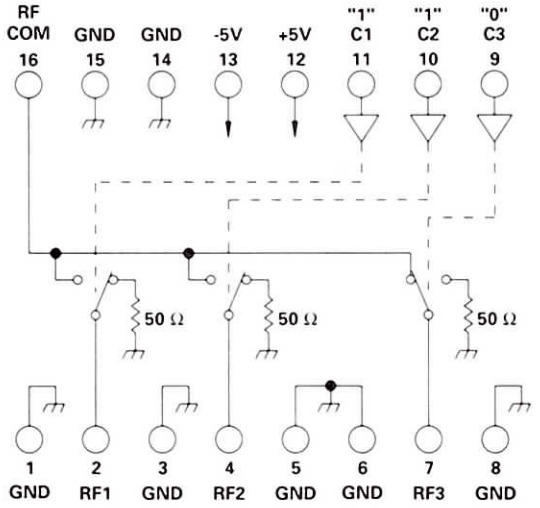

TYPICAL PERFORMANCE

at 25°C

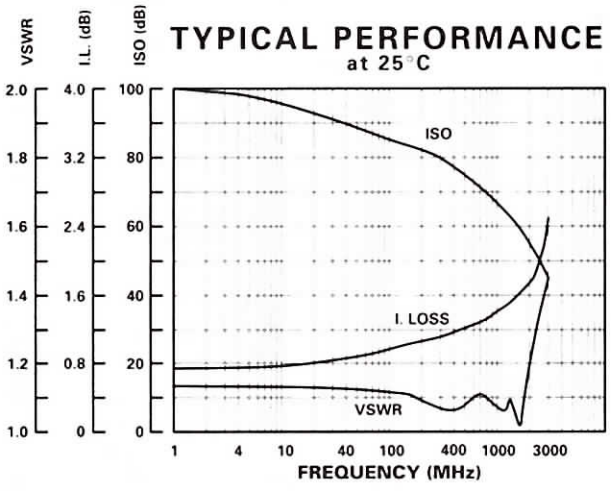

GUARANTEED PERFORMANCE

Parameter		Min	Typ	Max	Units	Conditions
Operating Frequency		5		1000	MHz	
DC Current			0.5	5	mA	At +5 VDC Supply
			0.1	2	mA	At -5 VDC Supply
Control Type			TTL			3 Lines
						Logic "0" = Thru
Control Current	*High*		±1.0		µA	VIH = +2.7V
	Low		±1.0		µA	VIL = +0.5V
Insertion Loss			1.1	1.3	dB	5 - 500 MHz
			1.1	2	dB	500 - 1000 MHz
Isolation		70	85		dB	5 - 100 MHz
		55	75		dB	100 - 650 MHz
		50	65		dB	650 - 1000 MHz
VSWR	*Thru*		1.15/1	1.3/1		
	Termination		1.15/1	2.0/1		
Impedance			50		OHMS	
Switching Speed			36	100	nSEC	50% TTL to 90% / 10% RF
Transition (Rise/Fall) Time			7		nSEC	10% / 90% or 90% / 10% RF
Switching (Video) Transients			15		mV	Peak Value
Intercept Points	*2nd*		+70		dBm	500 30 / 200 15 MHz
	3rd	+30	+47		dBm	250 30 / 200 30 MHz
RF Power	*Operate*			+5	dBm	5 - 50 MHz
	No Damage			+10	dBm	50 - 650 MHz
				+13	dBm	650 - 1000 MHz
Operating Temperature		-54	+25	+105	°C	TA

DAICO *Industries*

310.507.3242 • FAX 310.507.5701 • www.daico.com

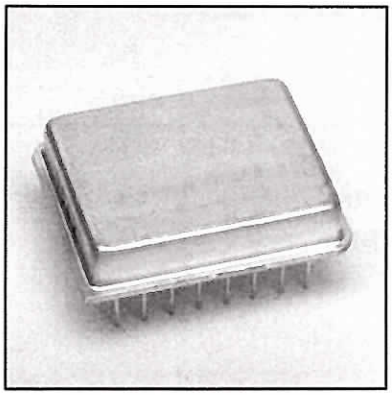

MODEL NUMBER DSW32096

GaAs SP3T

FEATURES

- DC-2050 MHz
- 10 nSec Transition Time
- 50 nSec Switching Speed
- 70 dB Isolation @ 1GHz
- Non-Reflective
- TTL Driver
- 16 Pin DIP

SP3T

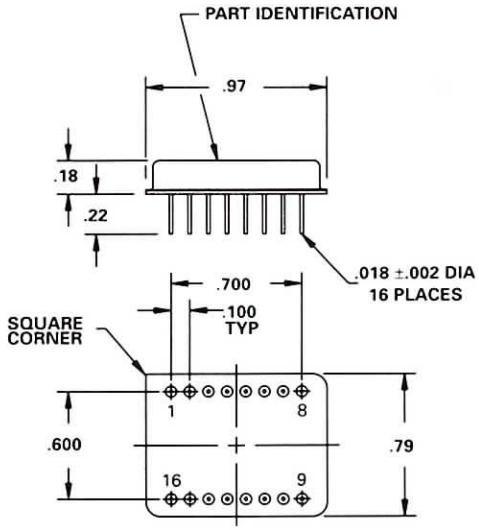

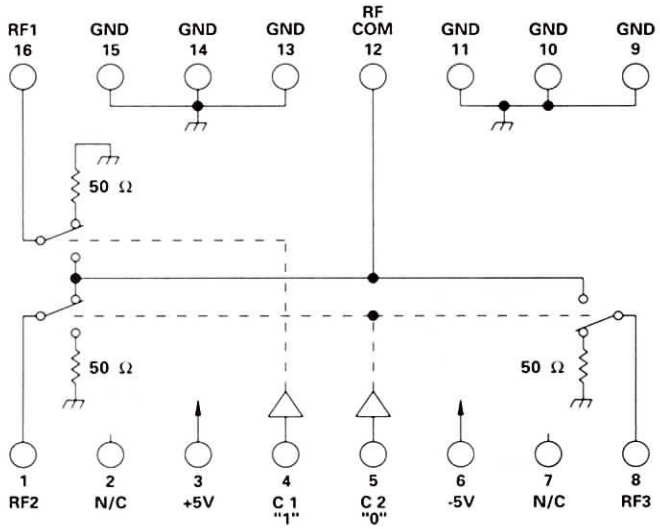

TYPICAL PERFORMANCE

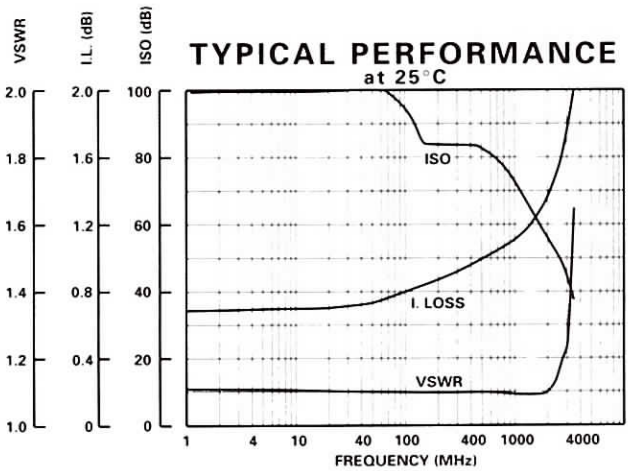

LOGIC TABLE		
C2	C1	Thru Path
0	0	COM to RF1
0	1	COM to RF2
1	0	COM to RF3
1	1	All Off

GUARANTEED PERFORMANCE

Parameter		Min	Typ	Max	Units	Conditions
Operating Frequency		DC		2050	MHz	
DC Current			0.2	5	mA	At +5 VDC Supply
			0.1	5	mA	At -5 VDC Supply
Control Type			TTL			2 Line
						See Logic Table
Control Current	*High*		±1	±10	µA	VIH = +2.7V
	Low		±1	±10	µA	VIL = +0.5V
Insertion Loss			1.1	1.5	dB	DC - 950 MHz
			1.4	2.0	dB	950 - 2050 MHz
Isolation		90	105		dB	DC - 500 MHz
		70	85		dB	50 - 500 MHz
		60	75		dB	500 - 1000 MHz
		45	56		dB	1000 - 2050 MHz
VSWR	*Thru*			1.6/1		
	Termination			2.0/1		
Impedance			50		OHMS	
Switching Speed			54	75	nSEC	50% TTL to 90% / 10% RF
Transition (Rise/Fall) Time			10	30	nSEC	10% / 90% or 90% / 10% RF
Switching (Video) Transients			18		mV	Peak Value
Intercept Points	*2nd*	+57	+63		dBm	70 MHz / 50 MHz
		+67	+73		dBm	214 MHz / 127 MHz
		+80	+87		dBm	500 MHz / 350 MHz
	3rd	+30	+35		dBm	35 MHz / 50 MHz
		+33	+39		dBm	107 MHz / 127 MHz
		+40	+46		dBm	350 MHz / 150 MHz
RF Power	*Operate*		+11	+7	dBm	DC - 10 MHz
			+13	+10	dBm	10 - 500 MHz
			+18	+15	dBm	500 - 2050 MHz
	No Damage			+25	dBm	
Operating Temperature		-55	+25	+125	°C	TA

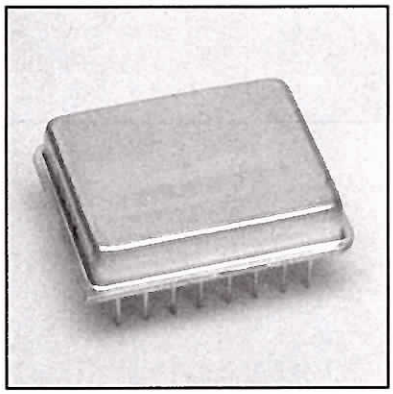

MODEL NUMBER DS0997

GaAs SP3T

FEATURES

- 5 - 2000 MHz
- 10 nSec Transition Time
- 30 nSec Switching Speed
- Non-Reflective
- TTL Drivers
- 16 Pin DIP

SP3T

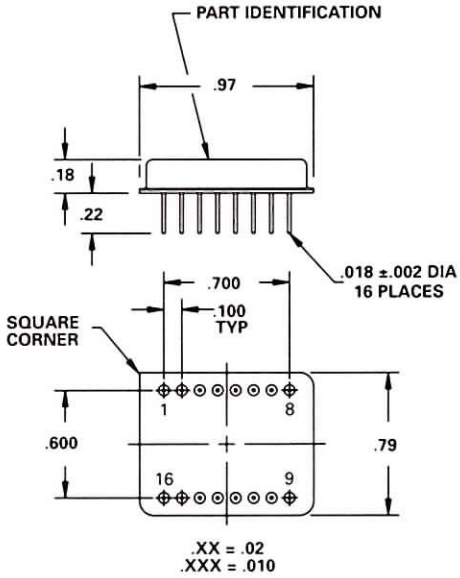

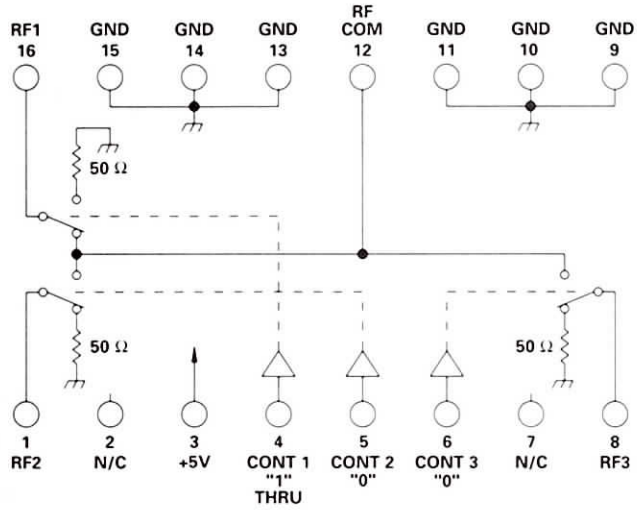

N/C=NO INTERNAL CONNECTION

TYPICAL PERFORMANCE
at 25°C

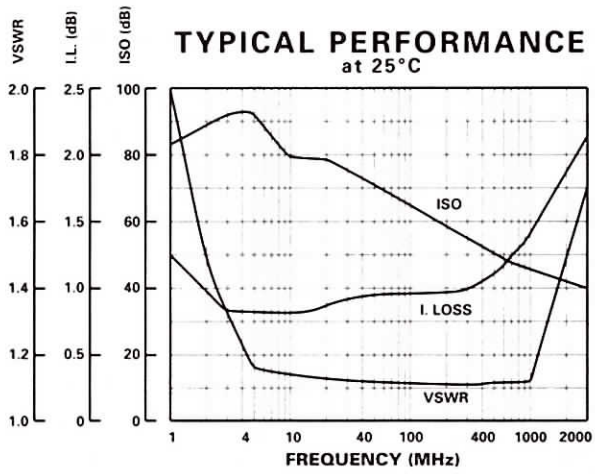

RF POWER OPERATE COMPRESSION POINT (dBM)

Frequency	0.1 dB		1.0 dB	
(MHz)	TYP	Max	TYP	Max
5	+11.5	+6	+17.5	+10
20	+14.7	+10	+21.3	+13
50	+16.6	+13	+21.4	+17
500	+17.5	+13	+21.5	+21

GUARANTEED PERFORMANCE

Parameter		Min	Typ	Max	Units	Conditions
Operating Frequency		5		2000	MHz	
DC Current			0.3	1	mA	At +5 VDC Supply
CDP			131	200	pF	
Control Type			TTL			3 Lines
						Logic "1"= Thru
						Logic "0"= Isolation
Control Current	*High*		1.0	±10	μ A	VIH = +2.7V
	Low		1.0	±10	μ A	VIL = +0.5V
Insertion Loss			1.3	1.8	dB	5 - 1000 MHz
			2.1	2.75	dB	1000 - 2000 MHz
Isolation		55	65		dB	5 - 100 MHz
		40	49		dB	100 - 1000 MHz
		35	39		dB	1000 - 2000 MHz
VSWR	*Thru*		1.2/1	1.5/1		5 - 10 MHz
			1.15/1	1.3/1		10 - 1000 MHz
			1.6/1	2.0/1		1000 - 2000 MHz
Impedance			50		OHMS	
Switching Speed			30	50	nSEC	50% TTL to 90% / 10% RF
Transition (Rise/Fall) Time			10		nSEC	90% / 10% or 10% / 90% RF
Switching (Video) Transients			28	35	mV	Peak Value
Intercept Points	*2nd*		+62		dBm	150 MHz / 350 MHz
	3rd		+48		dBm	200 MHz / 250 MHz
RF Power	*Operate*		+11	+6	dBm	5 - 20 MHz
			+16	+10	dBm	20 - 2000 MHz
	No Damage			+27	dBm	
Operating Temperature		-55	+25	+125	°C	TA

DAICO *Industries*

310.507.3242 • FAX 310.507.5701 • www.daico.com

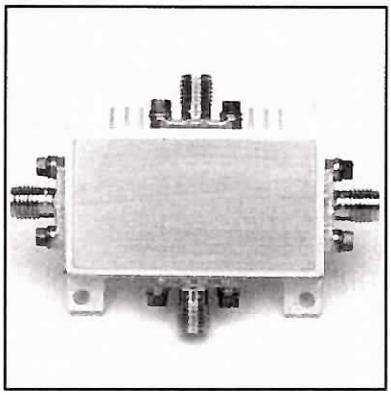

MODEL NUMBER DSW36200

GaAs SP3T

FEATURES

- .1 - 2000 MHz
- High Power Limiting

SP3T

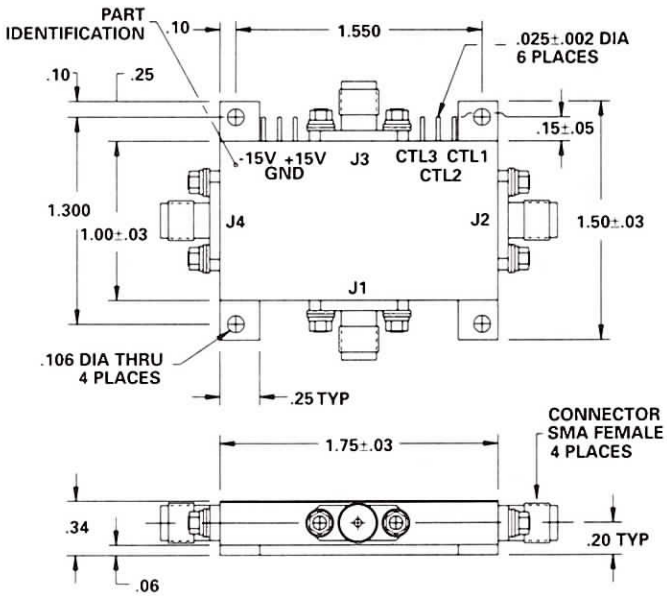

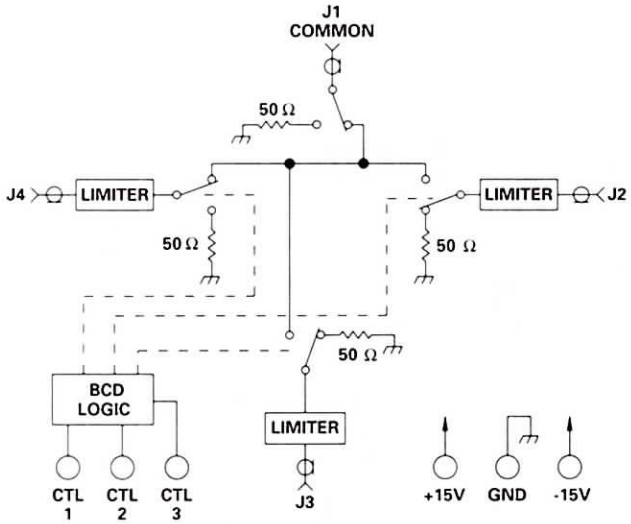

TYPICAL PERFORMANCE

at 25°C

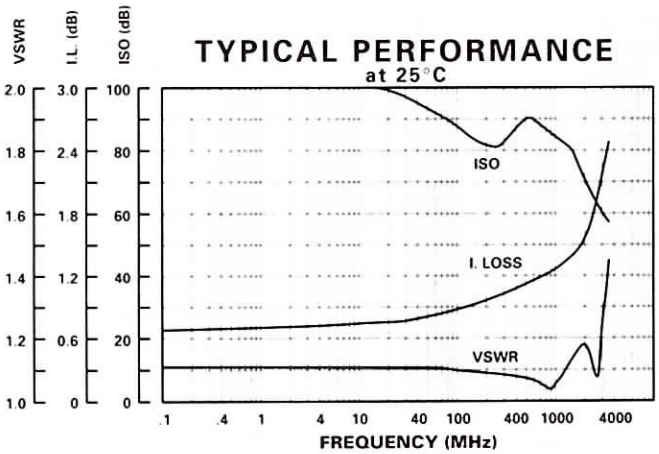

GUARANTEED PERFORMANCE

Parameter		Min	Typ	Max	Units	Conditions
Operating Frequency		0.1		2000	MHz	
DC Current			11	25	mA	At +15 VDC Supply
			10	20	mA	At -15 VDC Supply
Control Type			TTL			See Logic Table
Control Current	*High*		±10	±100	µA	VIH = +2.7V
	Low		±10	±100	µA	VIL = +0.5V
Isolation		60	70		dB	
Insertion Loss			2	3	dB	
VSWR	*Thru*		1.3/1	1.5/1		
	Termination		1.3/1			
Impedance			50		OHMS	
Switching Speed			.07	5	µSEC	50% TTL to 90% / 10% RF
Transition (Rise/Fall) Time			16		nSEC	10% / 90% or 90% / 10% RF
Switching (Video) Transients			37		mV	Peak Value
Intercept Points	*2nd*		+65		dBm	70 MHz / 50 MHz
	3rd		+34		dBm	35 MHz / 50 MHz
RF Power	*Operate*		11	-10	dBm	Min 1 dB Compression
	No Damage			+30	dBm	CW
	1 µSEC Pulse Width			+30	dBm	< 1 MHz
	(0.1% Duty Cycle At J2, J3 And			+40	dBm	10 MHz
	J4 Only)			+50	dBm	100 MHz - 18GHz
Operating Temperature		-55	+25	+125	°C	TA

LOGIC TABLE

CTL 3	CTL 2	CTL 1	J1 COMMON TO
0	0	0	ALL OFF
1	0	1	J2
1	1	0	J3
1	1	1	J4

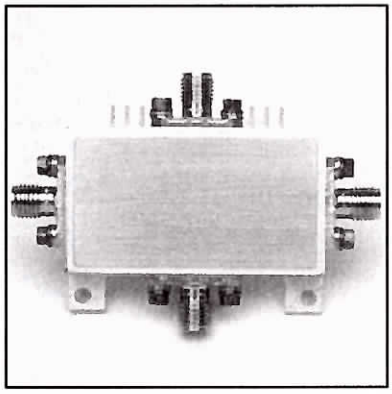

MODEL NUMBER CDS0623

PIN Diode SP3T

FEATURES

- 20- 2000 MHz
- 60 dB Isolation
- 13 mA, +5 VDC
- TTL Driver
- Non-Reflective
- Replaceable SMA Connectors

SP3T

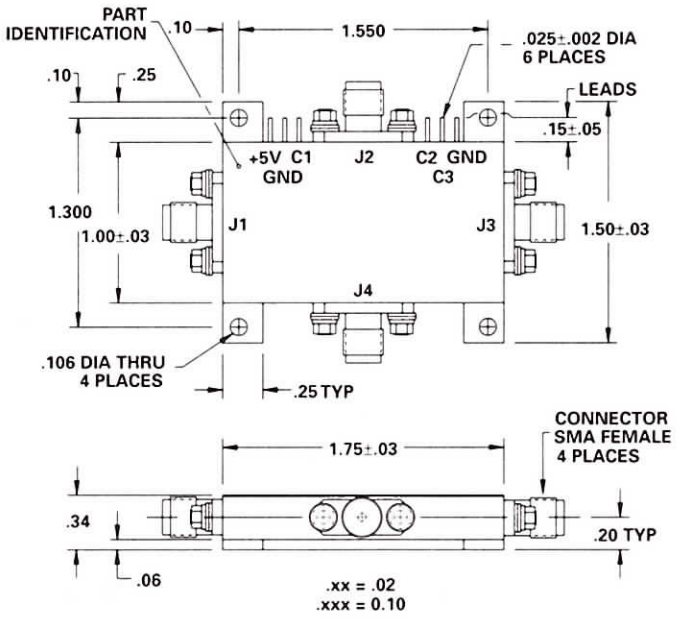

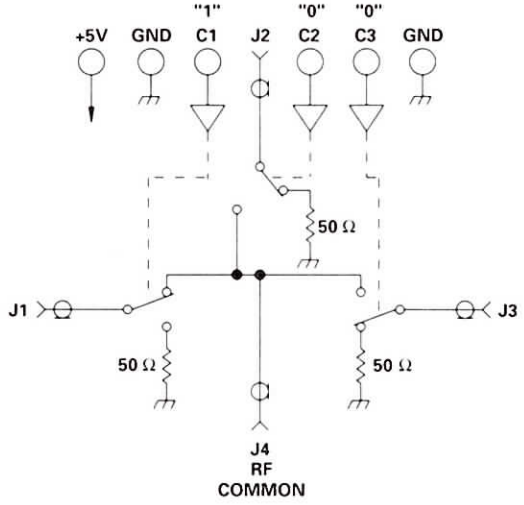

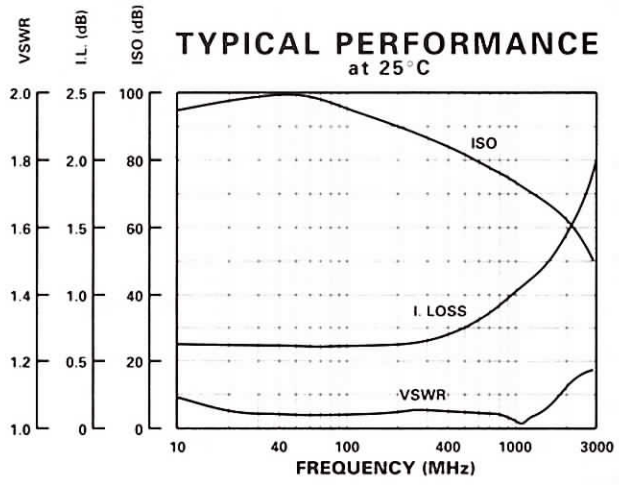

GUARANTEED PERFORMANCE

Parameter		Min	Typ	Max	Units	Conditions
Operating Frequency		20		2000	MHz	
DC Current			13	20	mA	At +5 VDC Supply
Control Type			TTL			3 Lines
						Logic "0" = Off
						Logic "1" = On
Control Current	*High*		0	±10	µA	VIH = +2.7V
	Low		0	±10	µA	VIL = +0.5V
Insertion Loss			1.0	1.5	dB	20 - 1000 MHz
			1.5	2.0	dB	1000 - 2000 MHz
Isolation		60	74		dB	20 - 1000 MHz
		50	63		dB	1000 - 2000 MHz
VSWR	*Thru*		1.15/1	1.3/1		
	Termination		1.06/1	1.3/1		
Impedance			50		OHMS	
Switching Speed			1.6	3	µSEC	50% Cont to 90% / 10% RF
Transition (Rise/Fall) Time			0.5		µSEC	90% / 10% or 10% / 90% RF
Switching (Video) Transients			0.5		V	Peak Value
Intercept Points	*2nd*		+79		dBm	50 MHz / 70 MHz
	3rd		+40		dBm	50 MHz / 35 MHz
RF Power	*Operate*		+15	+9	dBm	20 - 100 MHz
			+23	+15	dBm	100 - 2000 MHz
	No Damage			+27	dBm	
Operating Temperature		-55	+25	+125	°C	TA

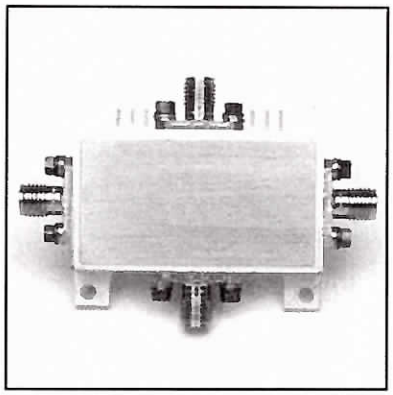

MODEL NUMBER CDS0669

PIN Diode SP3T

FEATURES

- 100-2000 MHz
- 80 dB Isolation
- 1 dB Insertion Loss
- TTL BCD Control
- Non-Reflective
- Replaceable SMA Connectors

SP3T

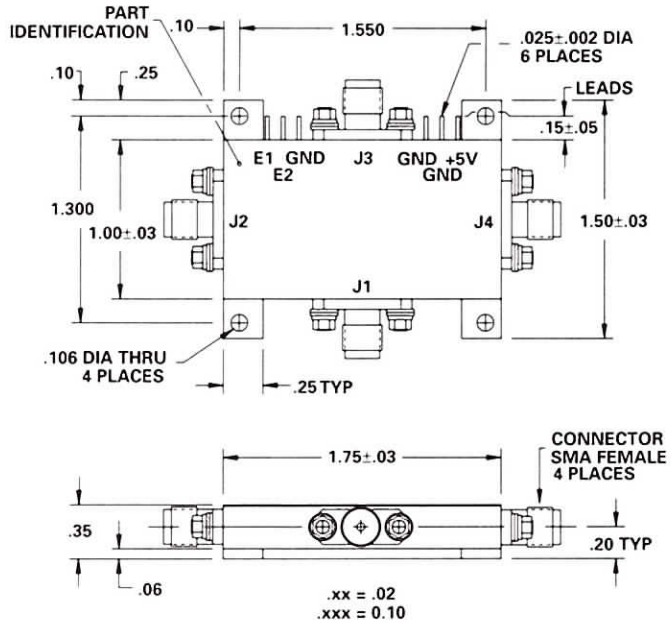

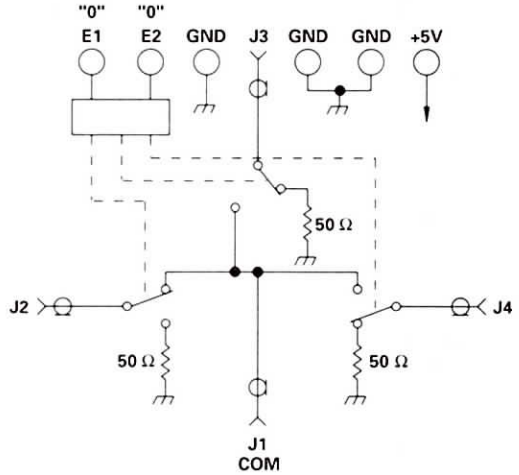

TYPICAL PERFORMANCE

at 25°C

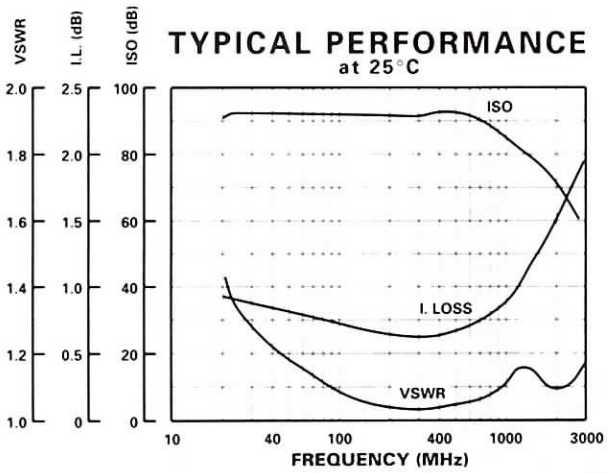

Logic Table		
Control Logic		RF Path
E2	E1	J1 (Com) To
0	0	J2
0	1	J3
1	0	J4

GUARANTEED PERFORMANCE

Parameter		Min	Typ	Max	Units	Conditions
Operating Frequency		100		2000	MHz	
DC Current			20	30	mA	At +5 VDC Supply
Control Type			TTL			2 Lines, See Logic Table
Control Current	*High*		1.0	20	µA	VIH = +2.7V
	Low		-0.2	-0.4	mA	VIL = +0.5V
Insertion Loss			0.7	1.0	dB	100 - 500 MHz
			1.0	1.5	dB	500 - 1000 MHz
			1.5	2.0	dB	1000 - 2000 MHz
Isolation		80	87		dB	100 - 1000 MHz
		65	75		dB	1000 - 2000 MHz
VSWR	*Thru*		1.11/1	1.35/1		
	Termination		1.18/1	1.35/1		
Impedance			50		OHMS	
Switching Speed			185	500	nSEC	50% TTL to 90% / 10% RF
Transition (Rise/Fall) Time			20		nSEC	90% / 10% or 10% / 90% RF
Switching (Video) Transients			650		mV	Peak Value
Intercept Points	*2nd*	+50	+67		dBm	350 MHz / 100 MHz
	3rd	+30	+41		dBm	175 MHz / 100 MHz
RF Power	*Operate*		+15	+10	dBm	100 - 500 MHz
			+25	+20	dBm	500 - 2000 MHz
	No Damage			+27	dBm	
Operating Temperature		-55	+25	+125	°C	TA

MODEL NUMBER DSW36177

GaAs SP3T

FEATURES

- 2 - 2500 MHz
- 50 dB Isolation
- +88 dBm 2nd Order Intercept Point
- +47 dBm 3rd Order Intercept Point

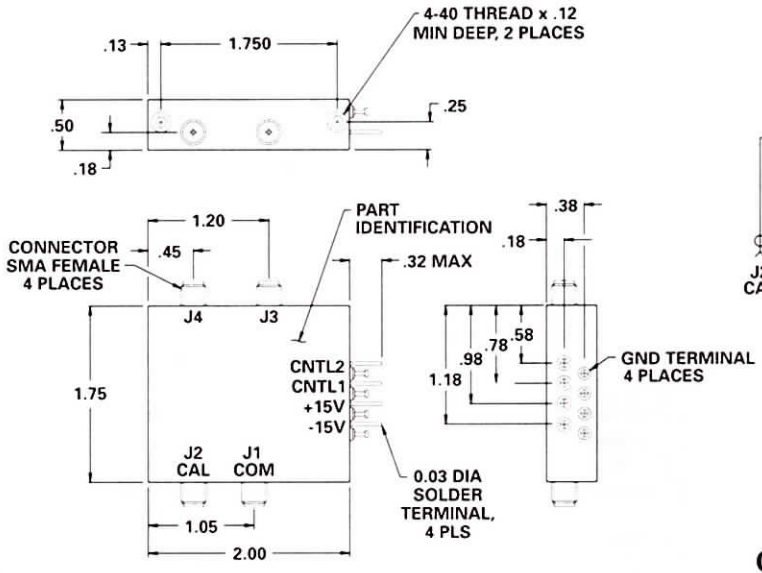

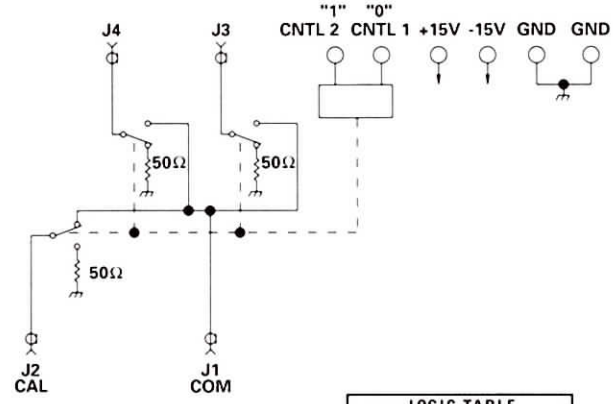

LOGIC TABLE		
Input Ctrl		Function
Ctrl 1	Ctrl 2	
0	0	All Off
0	1	J1 - J2
1	0	J1 - J3
1	1	J1 - J4

TYPICAL PERFORMANCE

at 25°C

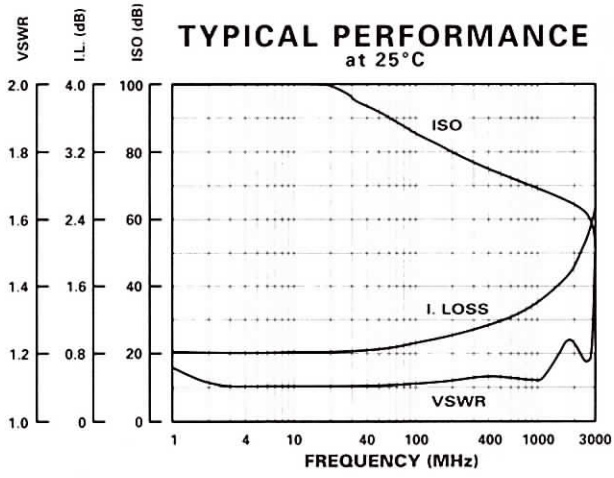

GUARANTEED PERFORMANCE

Parameter		Min	Typ	Max	Units	Conditions
Operating Frequency		2		2500	MHz	
DC Current			11	30	mA	At +15 VDC Supply
			5	30	mA	At -15 VDC Supply
Control Type			TTL			2 Line, See Logic Chart
Control Current	*High*		±1.0	20	µA	VIH = +2.7V
	Low		±1.0	-400	µA	VIL = +0.5V
Isolation		50			dB	
Insertion Loss			1.40	1.7	dB	2 - 1000 MHz
			2.15	3	dB	1000 - 2500 MHz
Amplitude Balance			±0.1	±0.3	dB	Reference between the Calibration Port and any Input Port of the Switch
Phase Tracking: Port to			±0.5	2	DEG	2 - 1000 MHz
Port (Max Differential)			±1.0	10	DEG	1000 - 2500 MHz
VSWR	*Thru*		1.25/1	1.4/1		
	Termination		1.1/1	1.5/1		
Impedance			50		OHMS	
Switching Speed			4.7	10	µSEC	50% TTL to 90% / 10% RF
Transition (Rise/Fall) Time			1.5	10	µSEC	10% / 90% or 90% / 10% RF
Switching (Video) Transients			0.30	1.0	V	Com when switched to all off
Intercept Points	*2nd*	+60	+88		dBm	1.3 MHz / 2.3 MHz
	3rd	+30	+47		dBm	1.3 MHz / 1.6 MHz
RF Power	*Operate*			+20	dBm	0.1 dB Compression
	No Damage			+30	dBm	
Operating Temperature		-55	+25	+85	°C	TA

MODEL NUMBER 100C0612

SP3T Relay

FEATURES

- DC-450 MHz
- 50Ω or 75Ω Terminations
- 20 Watts CW
- Non-Reflective
- SMA Connectors

SP3T

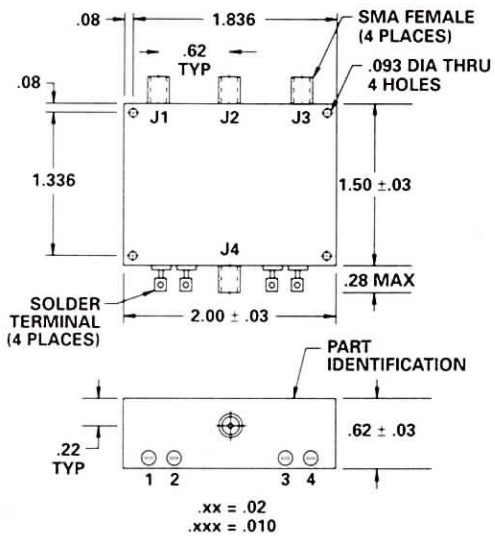

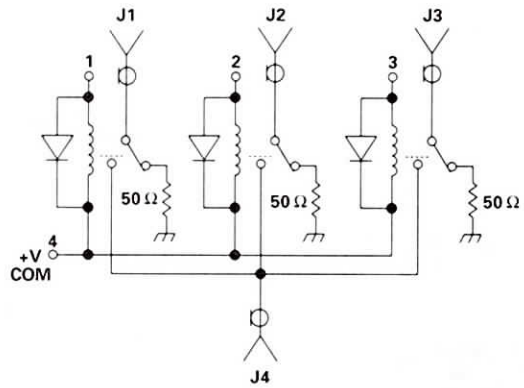

GUARANTEED PERFORMANCE

Parameter		Min	Typ	Max	Units	Conditions
Operating Frequency		DC		450	MHz	
DC Voltage						See Table
Insertion Loss			0.3	0.4	dB	DC - 250 MHz
			0.5	0.6	dB	250 - 450 MHz
Isolation		60	64		dB	DC - 250 MHz
		45	52		dB	250 - 450 MHz
VSWR	*Thru*		1.15/1	1.2/1		DC - 250 MHz
			1.3/1	1.4/1		250 - 450 MHz
Impedance			50		OHMS	
Switching Speed				5	mSEC	
RF Power	*Operate*			20	W	CW
Operating Temperature		-55	+25	+85	°C	TA

TYPICAL PERFORMANCE
at 25°C

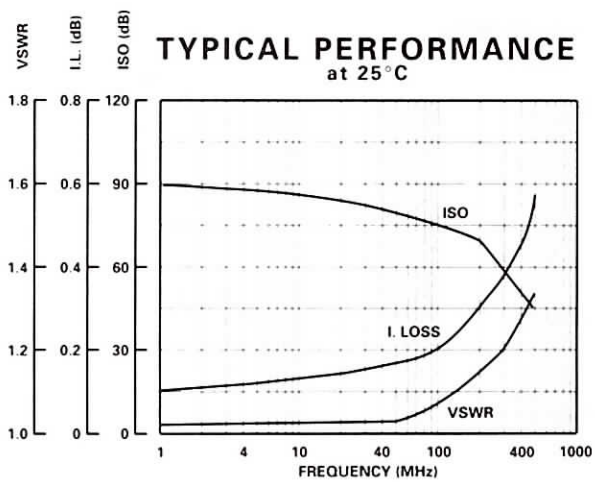

CONTROL VOLTAGE TABLE	
Voltage	Current - Typical
6	65 mA Per Throw
12	32 mA Per Throw
18	21 mA Per Throw
26	17 mA Per Throw

PART NO. EXAMPLE

100C0612 - 6 - F/S - R - 75

- Basic Part Number
- Dash No. for coil voltage (see table).
- "F/S" for failsafe J1 to J2 omit for standard.
- For reverse polarity of diodes. Omit for standard. See schematic for standard.
- Add for 75 Ω termination resistor. Omit for 50 Ω termination.

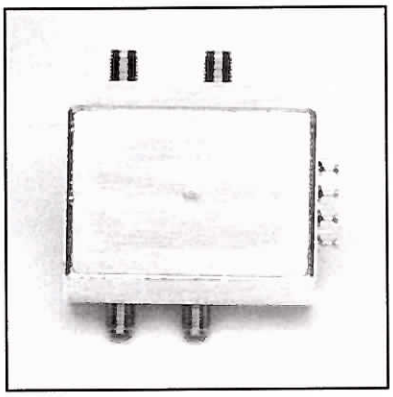

MODEL NUMBER CSW36333

GaAs SP3T

FEATURES

- 2-2500 MHz
- 70 dB Isolation
- ±0.1 dB Amplitude Tracking Port-to-Port
- ±0.5 Degrees Phase Tracking Port-to-Port
- All-Off-State

SP3T

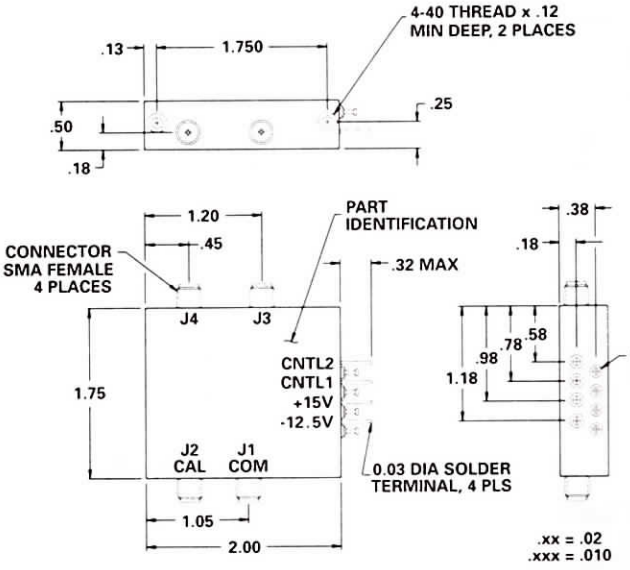

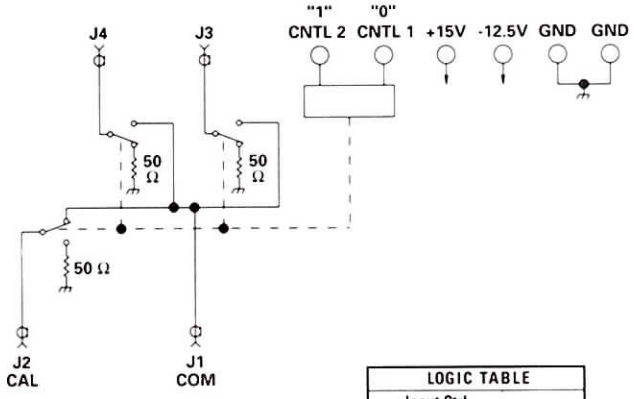

LOGIC TABLE		
Input Ctrl		Function
Ctrl 1	Ctrl 2	
0	0	All Off
0	1	J1 - J2
1	0	J1 - J3
1	1	J1 - J4

TYPICAL PERFORMANCE
at 25°C

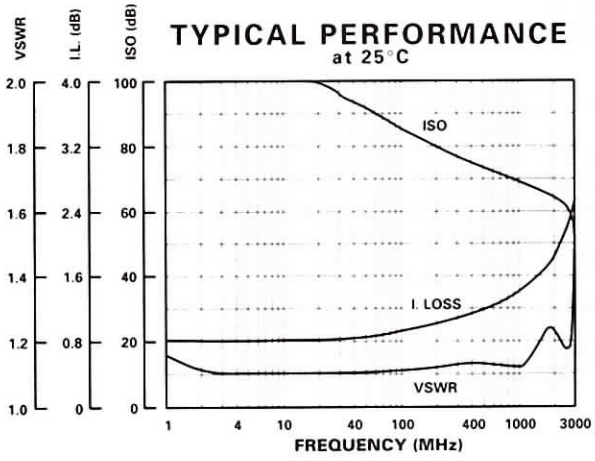

GUARANTEED PERFORMANCE

Parameter		Min	Typ	Max	Units	Conditions
Operating Frequency		2		2500	MHz	
DC Current			11	30	mA	At +15 VDC Supply
			5	30	mA	At -12.5 VDC Supply
Control Type			TTL			2 Line, See Logic Chart
Control Current	*High*		±1.0	20	µA	VIH = +2.7V
	Low		±1.0	-400	µA	VIL = +0.5V
Isolation		50	70		dB	
Insertion Loss			1.40	1.7	dB	2 - 1000 MHz
			2.15	3	dB	1000 - 2500 MHz
Amplitude Balance			±0.1	±0.3	dB	Reference between the Calibration Port and any Input Port of the Switch
Phase Tracking: Port to Port (Max Differential)			±0.5	2	DEG	2 - 1000 MHz
			±1.5	10	DEG	1000 - 2500 MHz
VSWR	*Thru*		1.25/1	1.4/1		
	Termination		1.1/1	1.5/1		
Impedance			50		OHMS	
Switching Speed			3.7	10	µSEC	50% TTL to 90% / 10% RF
Transition (Rise/Fall) Time			1.5	10	µSEC	10% / 90% or 90% / 10% RF
Switching (Video) Transients		0.18	0.30	1.0	V	Com when Switched to All Off
Intercept Points	*2nd*	+73	+88		dBm	1.3 MHz / 2.3 MHz
	3rd	+38	+47		dBm	1.3 MHz / 1.6 MHz
RF Power	*Operate*		+28	+20	dBm	0.1 dB Compression
	No Damage			+30	dBm	
Operating Temperature		-55	+25	+85	°C	TA

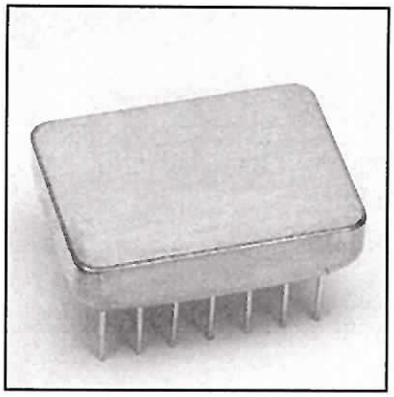

MODEL NUMBER DS0545

PIN Diode SP4T

FEATURES

- 10-500 MHz
- 8 mA, +15 VDC
- 0.6 dB Insertion Loss
- CMOS Driver with BCD
- Non-Reflective
- Small 14 Pin DIP
- Low Cost

SP4T

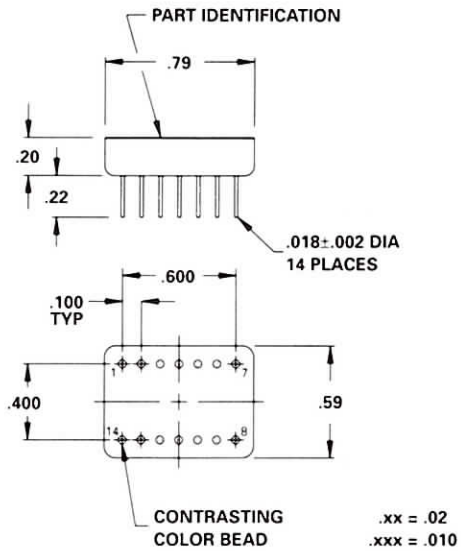

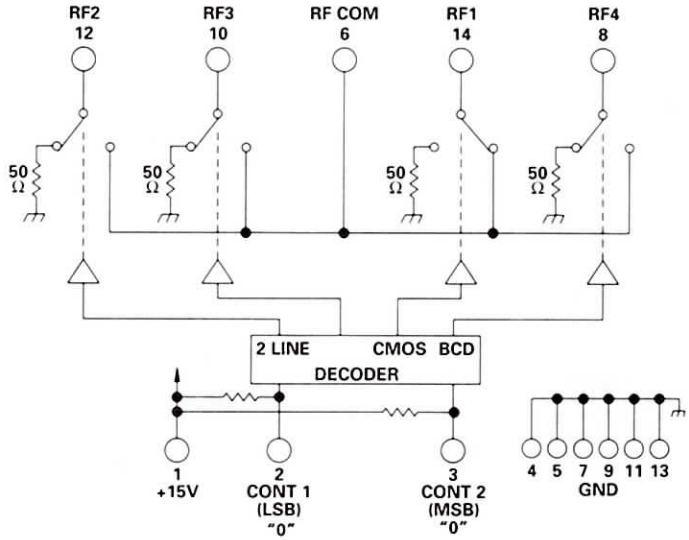

TYPICAL PERFORMANCE
at 25°C

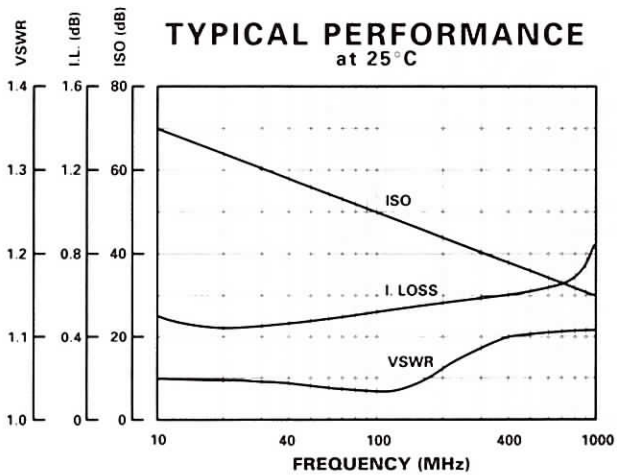

LOGIC TABLE		
Control State		Condition
C1	C2	RF COM to
0	0	RF1
1	0	RF2
0	1	RF3
1	1	RF4

GUARANTEED PERFORMANCE

Parameter		Min	Typ	Max	Units	Conditions
Operating Frequency		10		500	MHz	
DC Current			8	12	mA	At +15 VDC Supply
Control Type			CMOS			2 Line, See Logic Table
Control Current	*High*			±1	µA	VIH = +15V
	Low			-2.0	mA	VIL = 0V
Insertion Loss			0.6	0.8	dB	
Isolation		50	55		dB	10 - 30 MHz
		40	45		dB	30 - 100 MHz
		25	30		dB	100 - 500 MHz
VSWR			1.1/1	1.25/1		
	Termination		1.2/1	1.5/1		
Impedance			50		OHMS	
Switching Speed			7	35	µSEC	50% CMOS to 90% / 10% RF
Transition (Rise/Fall) Time			4		µSEC	90% / 10% or 10% / 90% RF
Switching (Video) Transients			220		mV	Peak Value
Intercept Points	*2nd*		+76		dBm	
	3rd		+47		dBm	
RF Power	*Operate*		+13	+10	dBm	0.1 dB Compression
	No Damage			+30	dBm	
Operating Temperature		-55	+25	+125	°C	TA

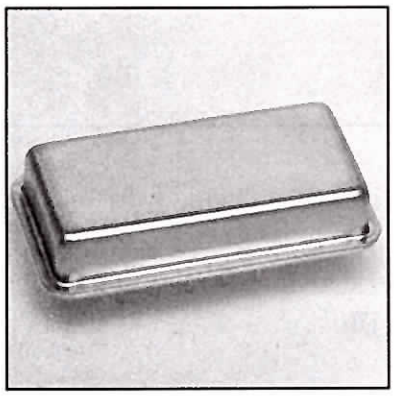

MODEL NUMBER DSW42044

GaAs SP4T

FEATURES

- DC - 1000 MHz
- Low Cost
- TTL Driver
- 14 pin DIP

SP4T

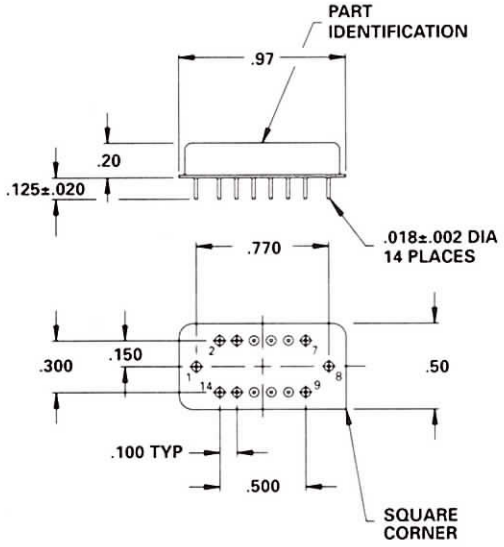

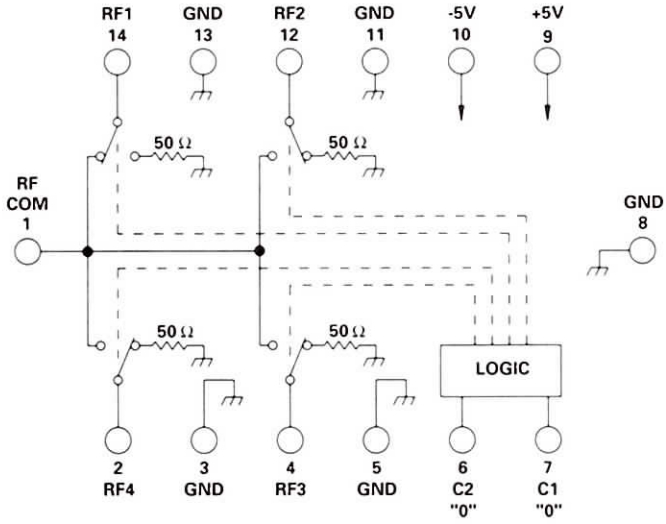

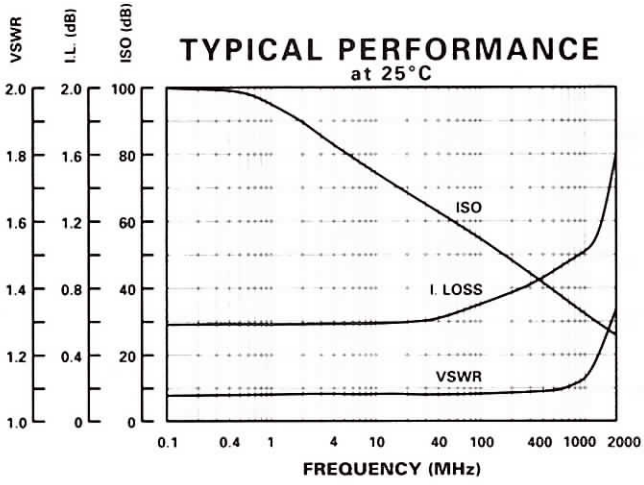

LOGIC TABLE		
C2	C1	THRU PATH
0	0	COM To RF1
0	1	COM To RF2
1	0	COM To RF3
1	1	COM To RF4

GUARANTEED PERFORMANCE

Parameter		Min	Typ	Max	Units	Conditions
Operating Frequency		DC		1000	MHz	
DC Current			0.20	1.0	mA	At +5 VDC Supply
			0.20	1.0	mA	At -5 VDC Supply
Control Type			TTL			2 Line
						See Logic Table
Control Current	*High*		0	±1	µA	VIH = +2.7V
	Low		0	±1	µA	VIL = +0.5V
Insertion Loss			0.7	1.0	dB	DC - 10 MHz
			1.0	1.5	dB	200 - 1000 MHz
Isolation		70	76		dB	DC - 10 MHz
		50	56		dB	10 - 100 MHz
		25	32		dB	100 - 1000 MHz
VSWR	*Thru*		1.2/1	1.3/1		
	Termination		1.2/1	1.5/1		
Impedance			50		OHMS	
Switching Speed			48	70	nSEC	50% TTL to 90% / 10% RF
Transition (Rise/Fall) Time			25		nSEC	90% / 10% or 10% / 90% RF
Switching (Video) Transients			25		mV	Peak Value
Intercept Points	*2nd*		+53		dBm	DC - 200 MHz
	3rd		+33		dBm	DC - 200 MHz
	2nd		+75		dBm	200 - 1000 MHz
	3rd		+45		dBm	200 - 1000 MHz
RF Power	*Operate*		+13	+10	dBm	DC - 200 MHz
			+16	+13	dBm	200 - 1000 MHz
	No Damage			+25	dBm	
Operating Temperature		-55	+25	+125	°C	TA

DAICO Industries

310.507.3242 • FAX 310.507.5701 • www.daico.com

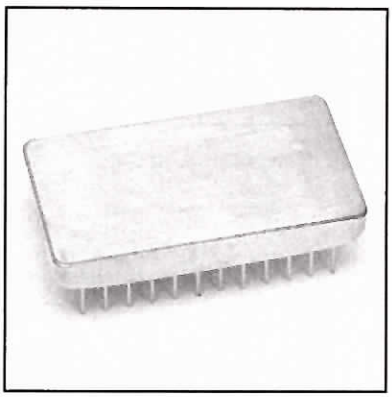

MODEL NUMBER DS0967

PIN Diode SP4T

FEATURES

- 20 - 2000 MHz
- Very Low Insertion Loss
- High Intercept Points
- TTL Driver With 2 Line BCD Control
- Non-Reflective
- 24 Pin DIP

SP4T

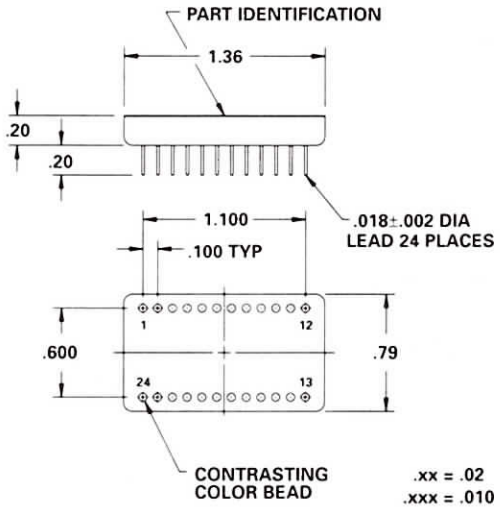

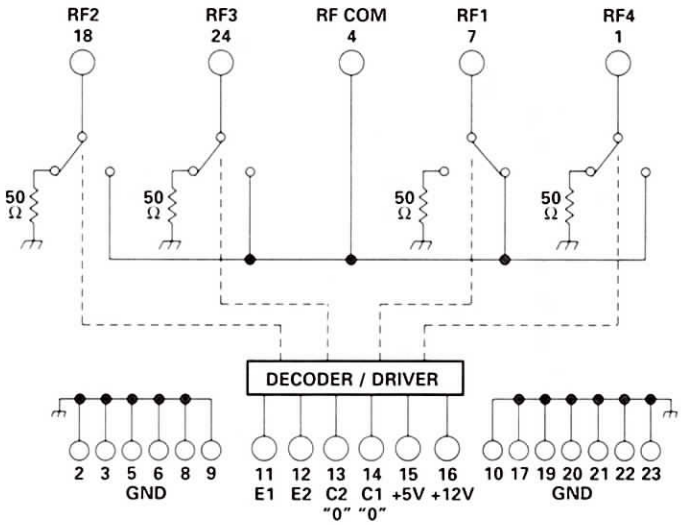

TYPICAL PERFORMANCE at 25°C

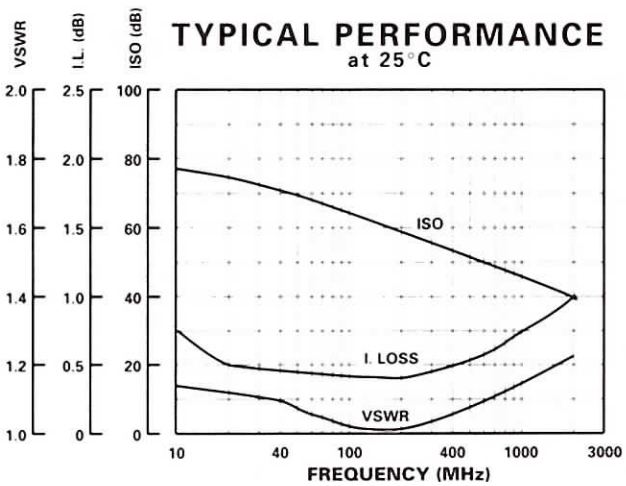

ENABLE CONDITION		
E1	E2	Switch
GND	+5V	Enable
+5V	X	Disable
X	GND	Disable

X = Don't Care, When Switch Is Disabled, All Outputs Are Terminated And the Common Is Reflective

LOGIC TABLE		
RF COM to	C2	C1
RF1	0	0
RF2	0	1
RF3	1	0
RF4	1	1

GUARANTEED PERFORMANCE

Parameter		Min	Typ	Max	Units	Conditions
Operating Frequency		20		2000	MHz	
DC Current			21	35	mA	At +5 VDC Supply
			11	20	mA	At +12 VDC Supply
Control Type			TTL			2 Line, See Logic Chart
Control Current	*High*		0	±20	µA	VIH = +2.7V
	Low		0	±20	µA	VIL = +0.5V
Insertion Loss			0.5	0.6	dB	20 - 500 MHz
			0.7	0.9	dB	500 - 1000 MHz
			1.0	1.2	dB	1000 - 2000 MHz
Isolation		45	51		dB	20 - 500 MHz
		37	45		dB	500 - 1000 MHz
		30	39		dB	1000 - 2000 MHz
VSWR	*Thru*		1.2/1	1.4/1		
	Termination		1.3/1	1.4/1		
Impedance			50		OHMS	
Switching Speed			1.4	5	µSEC	50% TTL to 90% / 10% RF
Transition (Rise/Fall) Time			0.1		µSEC	90% / 10% or 10% / 90% RF
Switching (Video) Transients			1.8		V	Peak Value
Intercept Points	*2nd*		+89		dBm	70 MHz / 50 MHz
	3rd		+47		dBm	35 MHz / 50 MHz
RF Power	*Operate*		+29	+25	dBm	0.1 dB Compression
	No Damage			+30	dBm	
Operating Temperature		-55	+25	+54	°C	TA

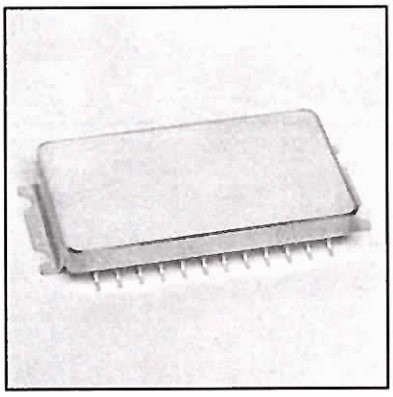

MODEL NUMBER DS0744

PIN Diode SP4T

FEATURES

- 10 - 1000 MHz
- 18 mA, +5 VDC
- Low Insertion Loss
- High Isolation
- TTL Driver
- 24 Pin Surface Mount Package
- See DS0644 For 24 Pin DIP Version

SP4T

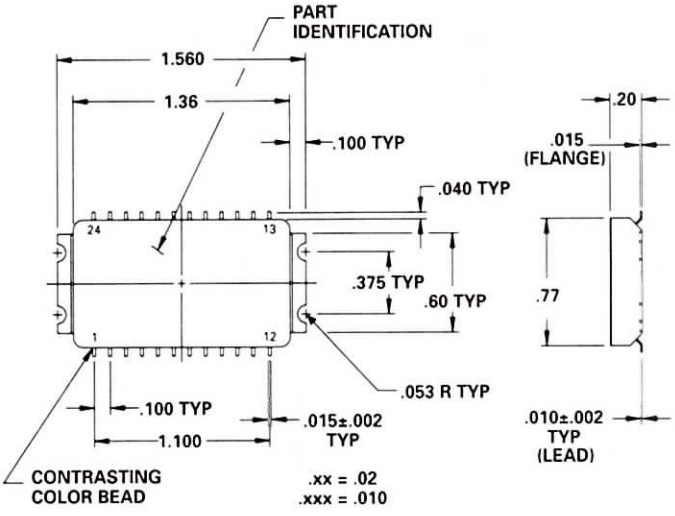

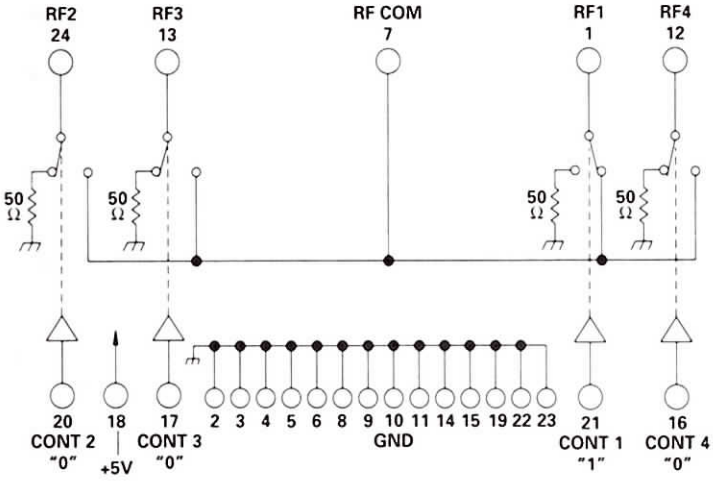

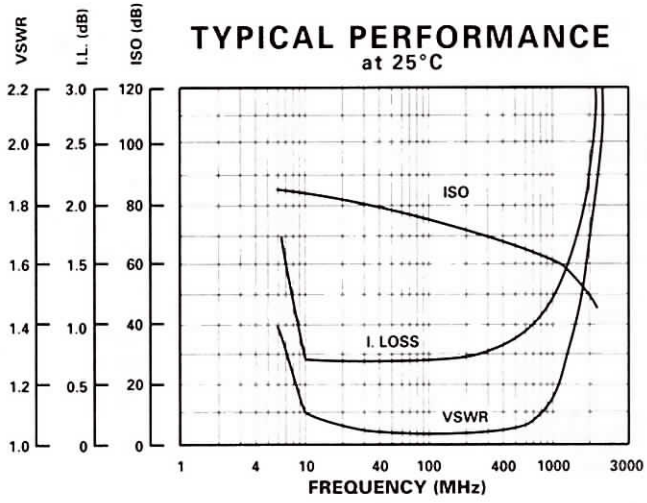

GUARANTEED PERFORMANCE

Parameter		Min	Typ	Max	Units	Conditions
Operating Frequency		10		1000	MHz	
DC Current			18	23	mA	At +5 VDC Supply
Control Type			TTL			4 Line, Logic "1" = Thru Logic "0" = Isolation
Control Current	*High*		1	±10	µA	VIH = +2.7V
	Low		1	±10	µA	VIL = +0.5V
Insertion Loss			0.7	1.0	dB	10 - 100 MHz
			1.2	1.5	dB	100 - 1000 MHz
Isolation		75	79		dB	10 - 100 MHz
		60	67		dB	100 - 500 MHz
		50	58		dB	500 - 1000 MHz
VSWR	*Thru*		1.2/1	1.5/1		
	Termination		1.3/1	1.5/1		
Impedance			50		OHMS	
Switching Speed			2.4	3	µSEC	50% TTL to 90% / 10% RF
Transition (Rise/Fall) Time			0.7		µSEC	90% / 10% or 10% / 90% RF
Switching (Video) Transients			2.2		V	Peak Value
Intercept Points	*2nd*		+81		dBm	400 MHz / 575 MHz
	3rd		+45		dBm	200 MHz / 575 MHz
RF Power	*Operate*		+9	+7	dBm	10 - 20 MHz
			+15	+10	dBm	20 - 100 MHz
			+25	+21	dBm	100 - 1000 MHz
	No Damage			+27	dBm	
Operating Temperature		-55	+25	+125	°C	TA

MODEL NUMBER DSW48024	GaAs SP4T

FEATURES

- DC - 2000 MHz
- Small 0.38" SQ Flatpack
- RF Common on One Side
  All RF Outputs on Opposite Side
- 2 Line TTL Control
- < 2 mA, ±5 VDC
- Non-Reflective

SP4T

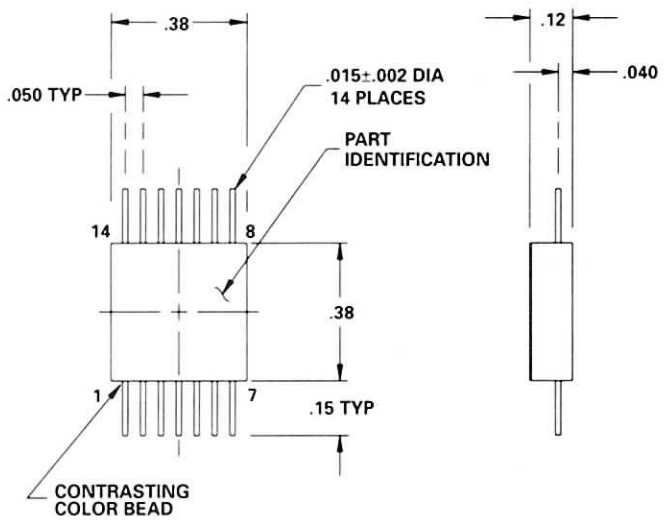

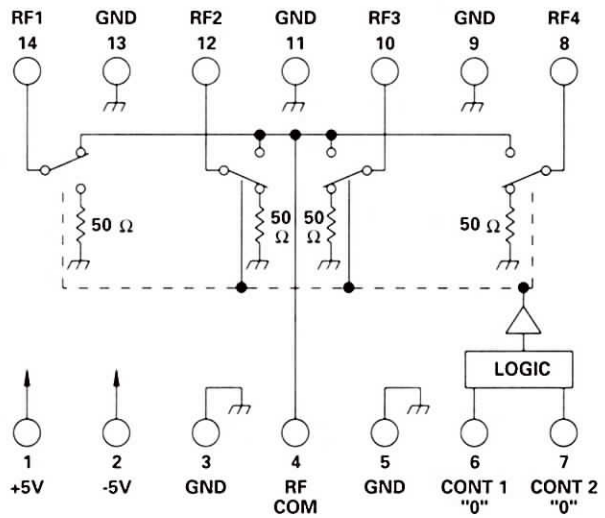

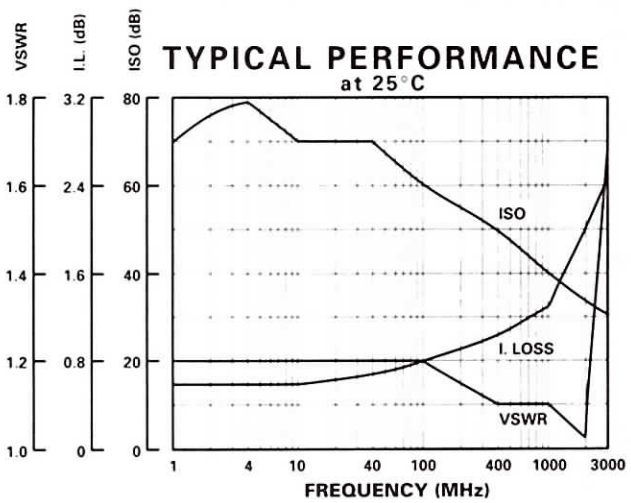

GUARANTEED PERFORMANCE

Parameter		Min	Typ	Max	Units	Conditions
Operating Frequency		DC		2000	MHz	
DC Current			0.2	3	mA	At +5 VDC Supply
			2	5	mA	At -5 VDC Supply
Control Type			TTL			2 Line (See Logic Table)
Insertion Loss			1.2	2.0	dB	DC - 500 MHz
			1.8	2.5	dB	500 - 2000 MHz
Isolation		35	42		dB	DC - 1000 MHz
		30	36		dB	1000 - 2000 MHz
VSWR	*Thru*		1.3/1	1.5/1		DC - 1000 MHz
	Termination		1.5/1	1.7/1		1000 - 2000 MHz
Impedance			50		OHMS	
Switching Speed			42	60	n SEC	50% TTL to 90% / 10% RF
RF Power	*Operate*		+11	+7	dBm	20 - 50 MHz (0.1 dB Compression)
			+13	+10	dBm	50 - 2000 MHz (0.1 dB Compression)
	No Damage	+27	+30		dBm	
Operating Temperature		-55	+25	+125	°C	TA

LOGIC TABLE		
C1	C2	RF COM TO
0	0	RF1
1	0	RF2
0	1	RF3
1	1	RF4

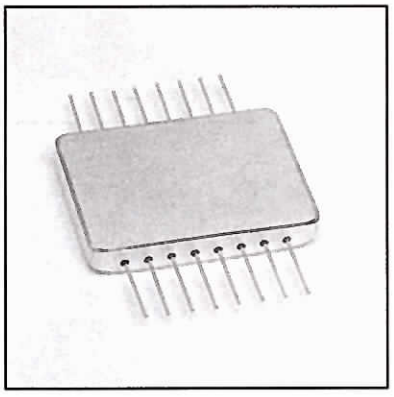

MODEL NUMBER CSW48051

Switch SP4T

FEATURES

- 20-2800 MHz
- +46 dBM 3rd Order Intercept Point
- 100 nSec Switching Speed
- Flat Pack
- 43 dB Isolation

SP4T

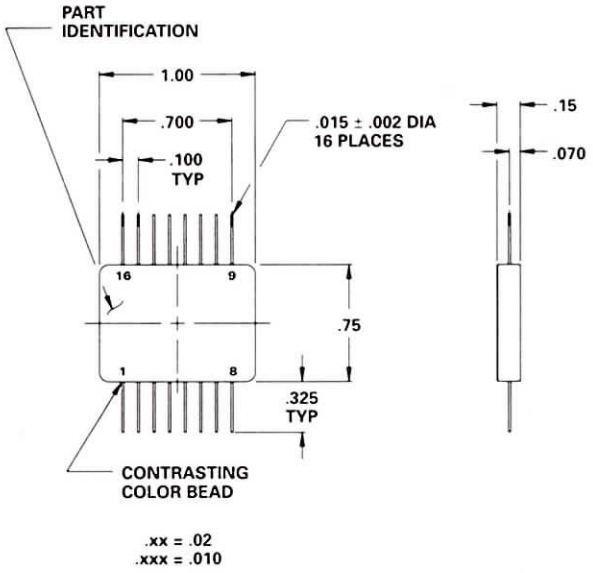

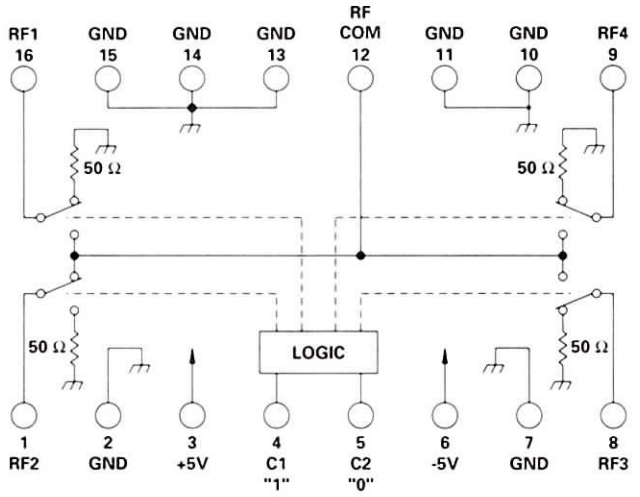

LOGIC TABLE		
CONTROL INPUT		RF COM TO
C2	C1	
0	0	RF1
0	1	RF2
1	0	RF3
1	1	RF4

TYPICAL PERFORMANCE
at 25°C

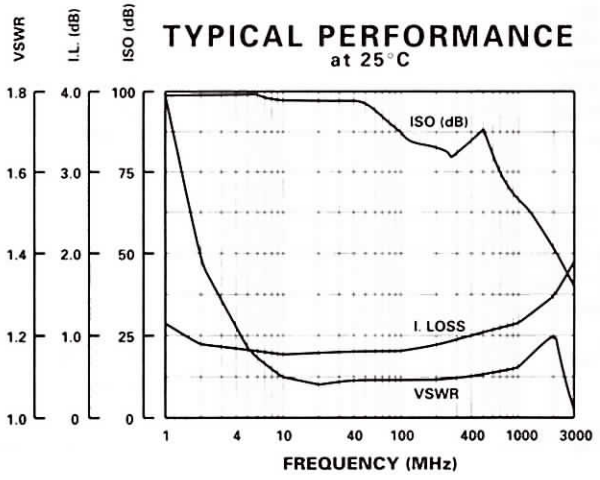

GUARANTEED PERFORMANCE

Parameter		Min	Typ	Max	Units	Conditions
Operating Frequency		20		2800	MHz	
DC Current			7.10	20	mA	At +5 VDC Supply
			0.15	10	mA	At -5 VDC Supply
Control Type			TTL			See Table
Control Current	*High*		±1.0	±10	µA	VIH = +2.7 V
	Low		±1.0	±10	µA	VIL = +0.5 V
Insertion Loss			1	1.5	dB	20 - 500 MHz
			1.2	2	dB	500 - 1000 MHz
			1.8	2.5	dB	1000 - 2800 MHz
Isolation		40	43		dB	
VSWR	*Thru*		1.19/1	1.4/1		
	Termination		1.36/1	1.4/1		
Impedance			50		OHMS	
Switching Speed			30	100	nSec	50% TTL to 90% / 10% RF
Switching (Video) Transients			78		mV	Peak Value
Intercept Points	*2nd*	+60	+77		dBm	60 / 35 MHz
	3rd	+30	+46		dBm	30 / 35 MHz
RF Power	*Operate*		+21	+20	dBm	0.1 dB Compression
	No Damage			+27	dBm	
Operating Temperature		-20	+25	+70	°C	TA
Storage Temperature		-45		+85	°C	TA

DAICO *Industries*

310.507.3242 • FAX 310.507.5701 • www.daico.com

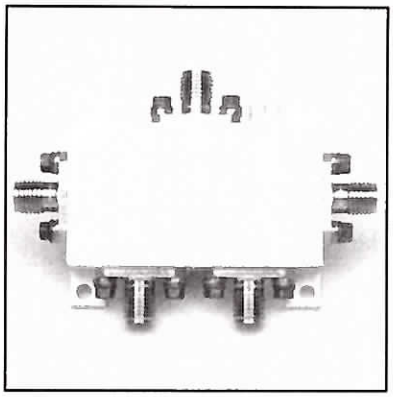

MODEL NUMBER DSW46190

GaAs SP4T

FEATURES

- 0.1- 150 MHz
- High Speed
- High Intercept Points
- SMA Connectors

SP4T

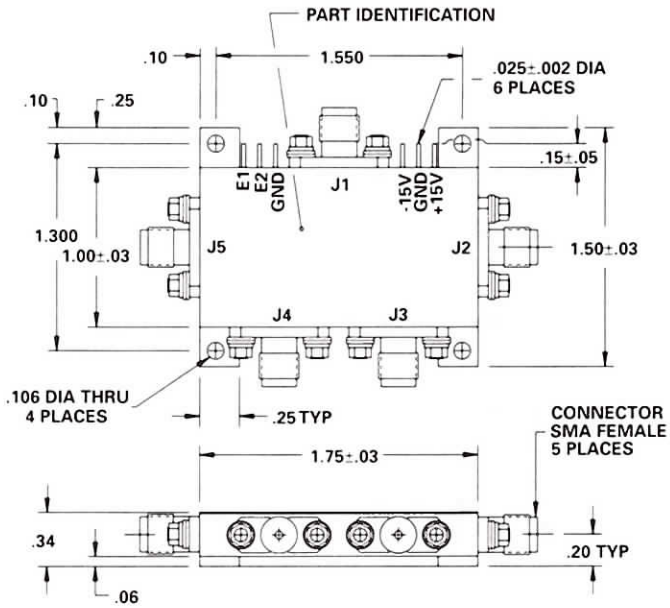

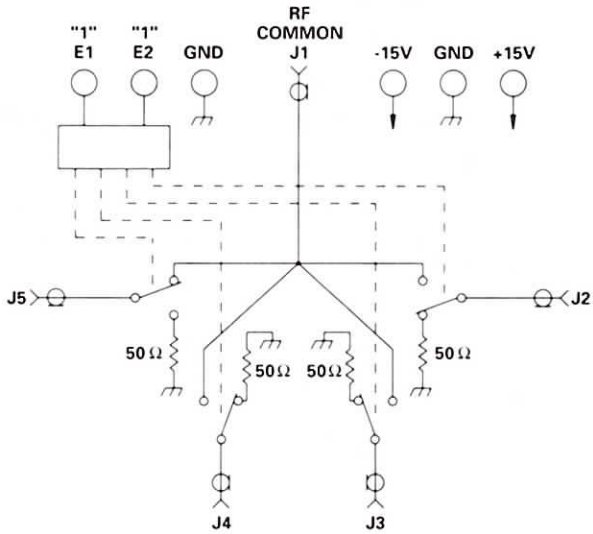

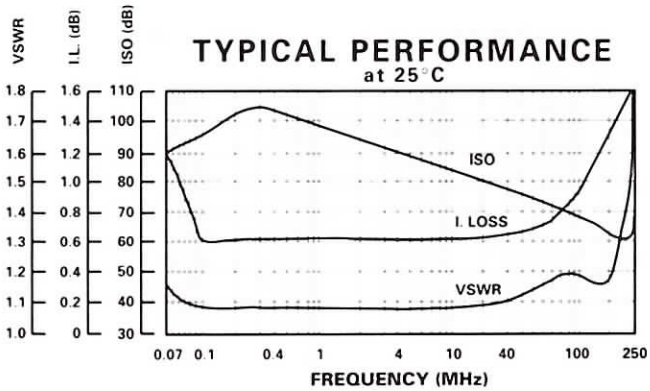

GUARANTEED PERFORMANCE

Parameter		Min	Typ	Max	Units	Conditions
Operating Frequency		0.1		150	MHz	
DC Current			13.2	20	mA	At +15 VDC Supply
			11.1	20	mA	At -15 VDC Supply
Control Type			TTL			See Logic Chart
Control Current	*High*		±1.0	±100	µA	VIH = +2.7V
	Low		±1.0	±100	µA	VIL = +0.5V
Isolation		60	65		dB	
Insertion Loss			1.2	1.4	dB	
Insertion Loss Variation Port To Port			0.06	0.1	dB	Between J2 and any other Port
Phase Difference Port to Port			4	10	deg	Between Port J2 and any other Port
VSWR	*Thru*		1.17/1	1.5/1		
	Termination		1.17/1	1.5/1		
Impedance			50		OHMS	
Switching Speed			186	500	nSEC	50% TTL to 90% / 10% RF
Transition (Rise/Fall) Time			116		nSEC	10% / 90% or 90% / 10% RF
Switching (Video) Transients			18		mV	In 3 KHz BW at 1 KHz PRF
Intercept Points	*2nd*	+81	+92		dBm	MHz (Two Tone Outputs
	3rd	+36	+54		dBm	At +10 dBm)
RF Power	*Operate*		+10.6		dBm	(0.1 dB Compression)
			+21.6	+18	dBm	(1.0 dB Compression)
	No Damage			+30	dBm	
Operating Temperature		-40	+25	+85	°C	TA

LOGIC TABLE

E2	E1	RF PATH
0	0	J1-J2
0	1	J1-J3
1	0	J1-J4
1	1	J1-J5

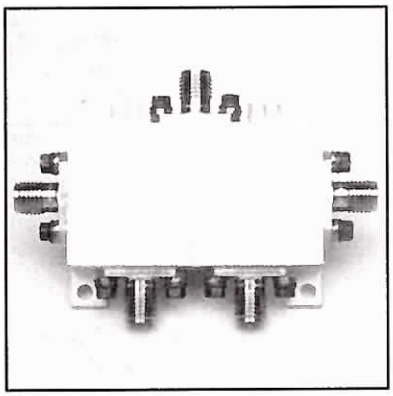

MODEL NUMBER CDS0624

PIN Diode SP4T

FEATURES

- 20 - 2000 MHz
- 60 dB Isolation
- TTL Driver
- Non-Reflective
- Replaceable SMA Connectors

SP4T

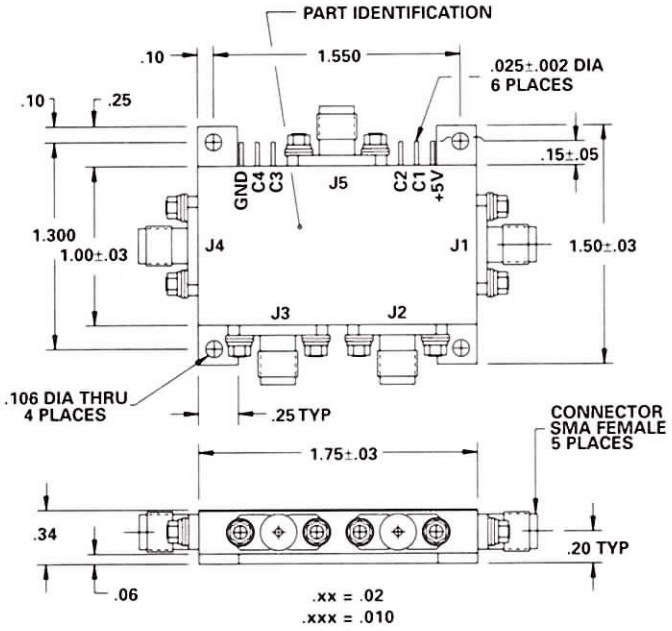

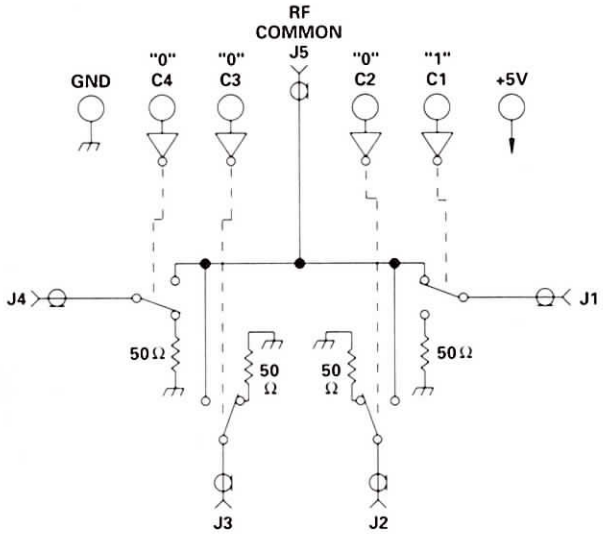

GUARANTEED PERFORMANCE

Parameter		Min	Typ	Max	Units	Conditions
Operating Frequency		20		2000	MHz	
DC Current			17.5	24	mA	At +5 VDC Supply
Control Type			TTL			4 Line
						Logic "0" = Off
						Logic "1" = On
Control Current	*High*		0	±10	µA	VIH = +2.7V
	Low		0	±10	µA	VIL = +0.4V
Insertion Loss			0.9	1.5	dB	20 - 1000 MHz
			1.4	2.0	dB	1000 - 2000 MHz
Isolation		60	72		dB	20 - 1000 MHz
		50	59		dB	1000 - 2000 MHz
VSWR	*Thru*		1.13/1	1.3/1		
	Termination		1.06/1	1.3/1		
Impedance			50		OHMS	
Switching Speed			1.52	3	µSEC	50% TTL to 90% / 10% RF
Transition (Rise/Fall) Time			0.32		µSEC	90% / 10% or 10% / 90% RF
Switching (Video) Transients			0.33		V	Peak Value
Intercept Points	*2nd*		+79		dBm	50 MHz / 70 MHz
	3rd		+39		dBm	50 MHz / 35 MHz
RF Power	*Operate*		+12	+9	dBm	20 - 100 MHz
			+21	+15	dBm	100 - 2000 MHz
	No Damage			+27	dBm	
Operating Temperature		-55	+25	+125	°C	TA

TYPICAL PERFORMANCE
at 25°C

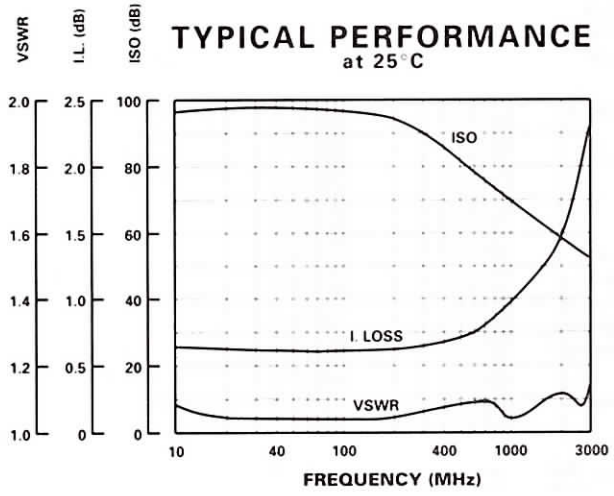

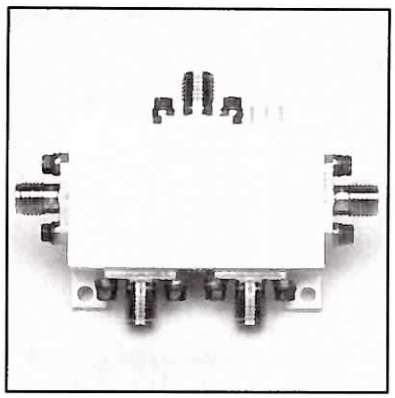

MODEL NUMBER CDS0670

PIN Diode SP4T

FEATURES

- 100 - 2000 MHz
- 80 dB Isolation
- TTL BCD Control
- Non-Reflective
- Replaceable SMA Connectors

SP4T

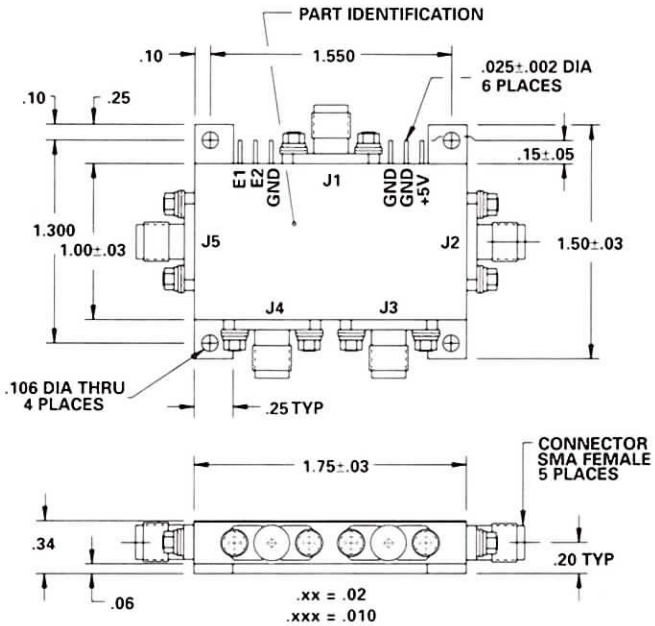

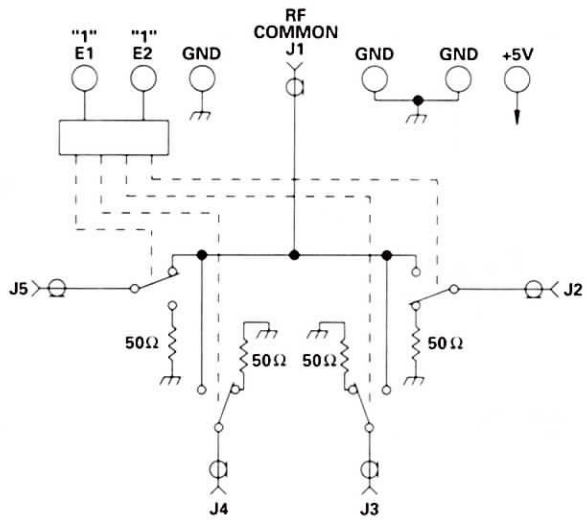

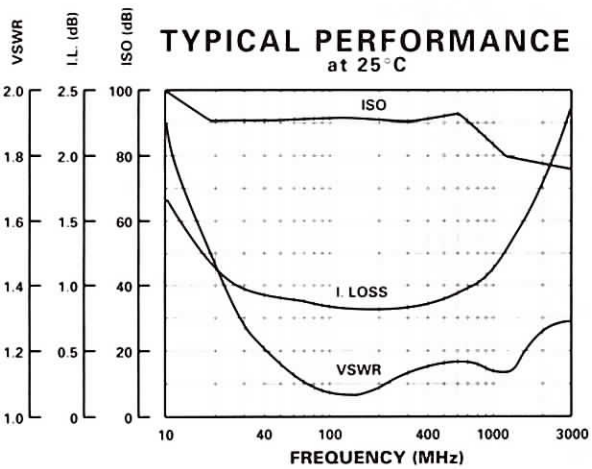

GUARANTEED PERFORMANCE

Parameter		Min	Typ	Max	Units	Conditions
Operating Frequency		100		2000	MHz	
DC Current			30	40	mA	At +5 VDC Supply
Control Type			TTL			2 Line, See Logic Chart
Control Current	*High*		1	20	µA	VIH = +2.7V
	Low		-0.2	-0.4	mA	VIL = +0.5V
Insertion Loss			1.3	1.8	dB	100 - 1000 MHz
			1.8	2.5	dB	1000 - 2000 MHz
Isolation		80	87		dB	100 - 1000 MHz
		65	75		dB	1000 - 2000 MHz
VSWR	*Thru*		1.17/1	1.35/1		
	Termination		1.26/1	1.35/1		
Impedance			50		OHMS	
Switching Speed			210	500	nSEC	50% TTL to 90% / 10% RF
Transition (Rise/Fall) Time			30		nSEC	90% / 10% or 10% / 90% RF
Switching (Video) Transients			600		mV	Peak Value
Intercept Points	*2nd*		+67		dBm	350 MHz / 100 MHz
	3rd		+39		dBm	175 MHz / 100 MHz
RF Power	*Operate*		+15	+10	dBm	100 - 500 MHz
			+25	+20	dBm	500 - 2000 MHz
	No Damage			+27	dBm	
Operating Temperature		-55	+25	+125	°C	TA

LOGIC TABLE

E2	E1	RF PATH
0	0	J1-J2
0	1	J1-J3
1	0	J1-J4
1	1	J1-J5

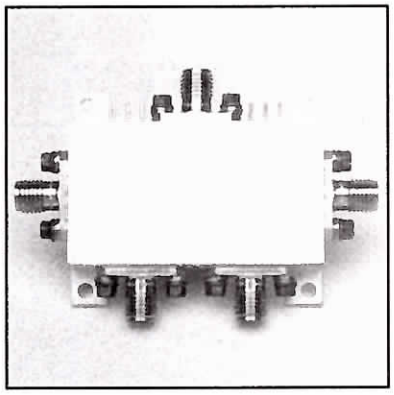

MODEL NUMBER DSW46174

Switch SP4T

FEATURES

- DC - 4000 MHz
- 33 nSec Switching Speed
- 54 dB Isolation
- 2.2 dB Insertion Loss
- SMA Female Connectors

SP4T

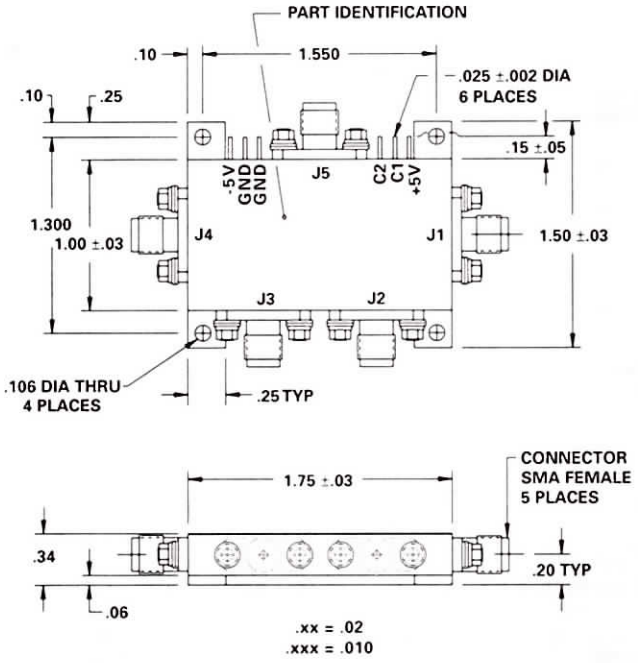

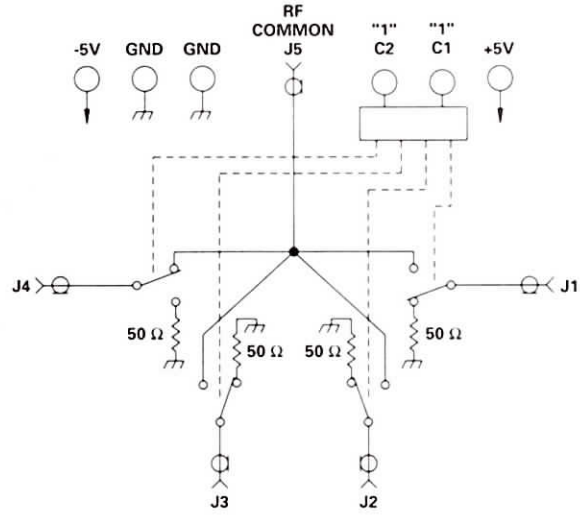

LOGIC TABLE		
C2	C1	RF PATH
0	0	J5-J1
0	1	J5-J2
1	0	J5-J3
1	1	J5-J4

TYPICAL PERFORMANCE

at 25°C

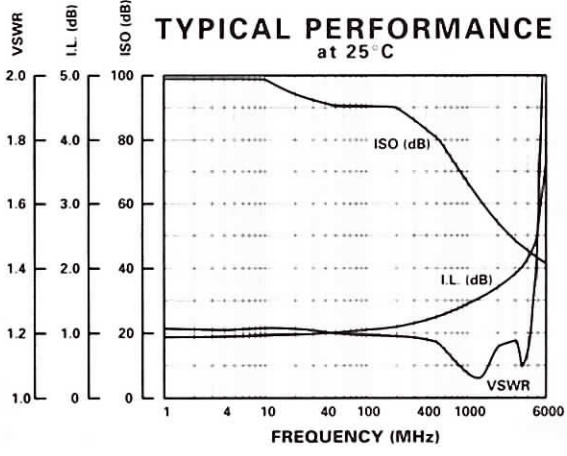

GUARANTEED PERFORMANCE

Parameter		Min	Typ	Max	Units	Conditions
Operating Frequency		DC		4000	MHz	
DC Current			0.52	10	mA	At +5 VDC Supply
			-0.13	10	mA	At -5 VDC Supply
Control Type			TTL			See Logic Table
Control Current	*High*		±10	±10	µA	VIH = +2.7 V
	Low		±10	±10	µA	VIL = +0.5 V
Insertion Loss			2.2	3	dB	
Isolation		50	54		dB	At 2 GHz
VSWR	*Thru*		1.24/1	1.5/1		
	Termination		1.19/1	1.5/1		
Impedance			50		OHMS	
Switching Speed			33	100	nSec	50% TTL - 90% / 10% RF
Transition (Rise/Fall) Time			4	25	nSec	10% / 90% or 90% / 10% RF
Switching (Video) Transients			28	100	V	Peak Value
Intercept Points	*2nd*		+43		dBm	2 MHz / 3 MHz
	3rd	+30	+31.5		dBm	At 1 MHz Single Tone
RF Power	*Operate*		+9.6		dBm	0.1 dB Compression
	No Damage			+23	dBm	
Operating Temperature		-55	+25	+125	°C	TA

MODEL NUMBER DSW46194	GaAs SP4T

FEATURES

- 1-1200 MHz
- High Intercept Points
- 80 dB Isolation
- 1.25 dB Insertion Loss
- TTL Control
- Non-Reflective
- SMA Connectors

SP4T

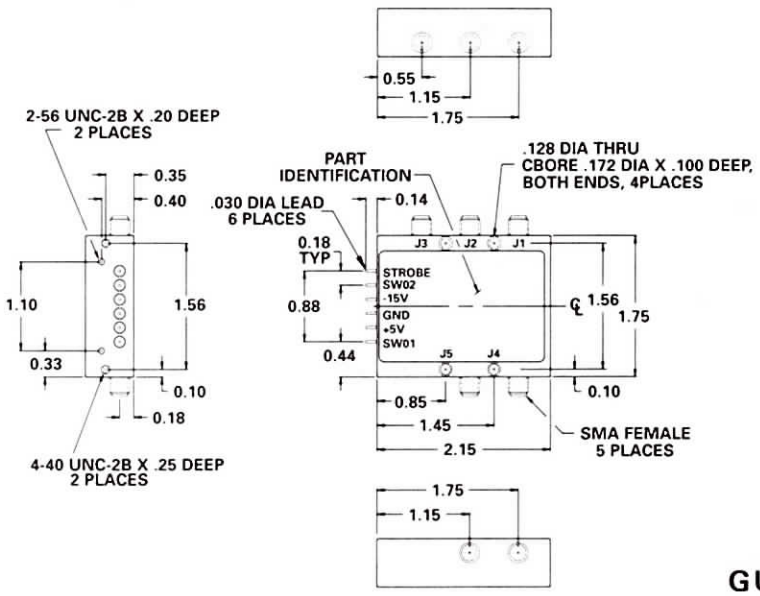

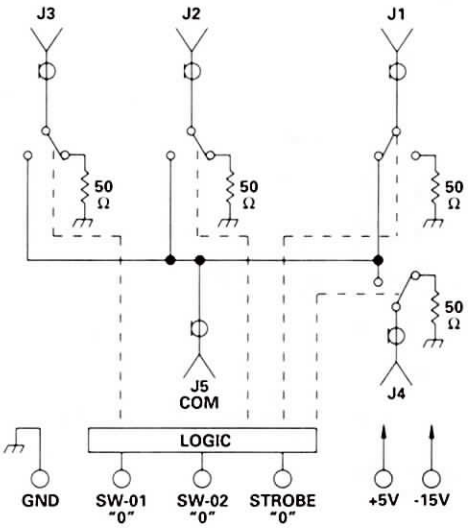

TYPICAL PERFORMANCE
at 25°C

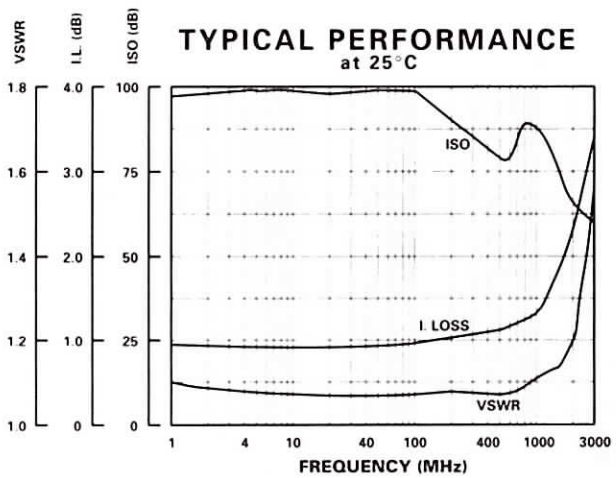

LOGIC TABLE			
Strobe	SW-02	SW-01	Function
0	0	0	J5 - J1
0	0	1	J5 - J2
0	1	0	J5 - J3
0	1	1	J5 - J4
1	X	X	Last State When Strobe was at a low level

X = Don't Care

GUARANTEED PERFORMANCE

Parameter		Min	Typ	Max	Units	Conditions
Operating Frequency		1		1200	MHz	
DC Current			27	43	mA	At +5 VDC Supply
			40	53	mA	At -15 VDC Supply
Control Type			TTL			See Logic Chart
Control Current	*High*				µA	VIH = +2.7V
	Low				µA	VIL = +0.5V
Isolation		70	80		dB	500 - 1000 MHz
Insertion Loss			1.25	1.5	dB	1 - 100 MHz
			1.70	2.0	dB	100 - 1200 MHz
	Amp Balance		±0.1	±0.3	dB	Port to Port, REF J4
	Phase Balance		±1	±2.0	DEG	Port to Port, REF J4
VSWR	*Thru*		1.15/1	1.25/1		
	Termination		1.25/1	1.5/1		
Impedance			50		OHMS	
Switching Speed			7.5	10	µSEC	50% TTL to 90% / 10% RF
Transition (Rise/Fall) Time			3		µSEC	10% / 90% or 90% / 10% RF
Switching (Video) Transients			-80	-70	dBm	
Intercept Points	*2nd*	+70	+76		dBm	1 - 20 MHz
		+80	+100		dBm	20 - 1200 MHz
	3rd	+35	+38		dBm	1 - 20 MHz
		+40	+61		dBm	20 - 1200 MHz
RF Power	*Operate*		+14	+12	dBm	1 - 2 MHz
			+17	+15	dBm	2 - 20 MHz
			+30	+20	dBm	20 - 1200 MHz (0.1 dB Compression)
	No Damage			+30	dBm	
Operating Temperature		0	+25	+75	°C	TA

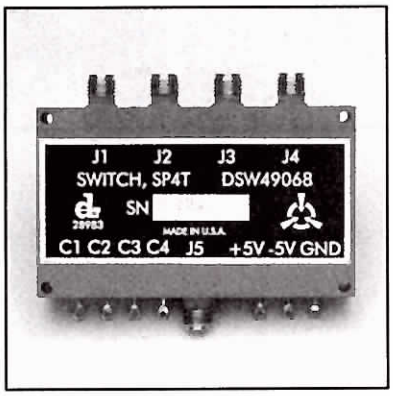

MODEL NUMBER DSW49068

Switch SP4T

FEATURES

- 830-930 MHz
- High Isolation
- High Intercept Points
- Small Size
- SMA Connectorized

SP4T

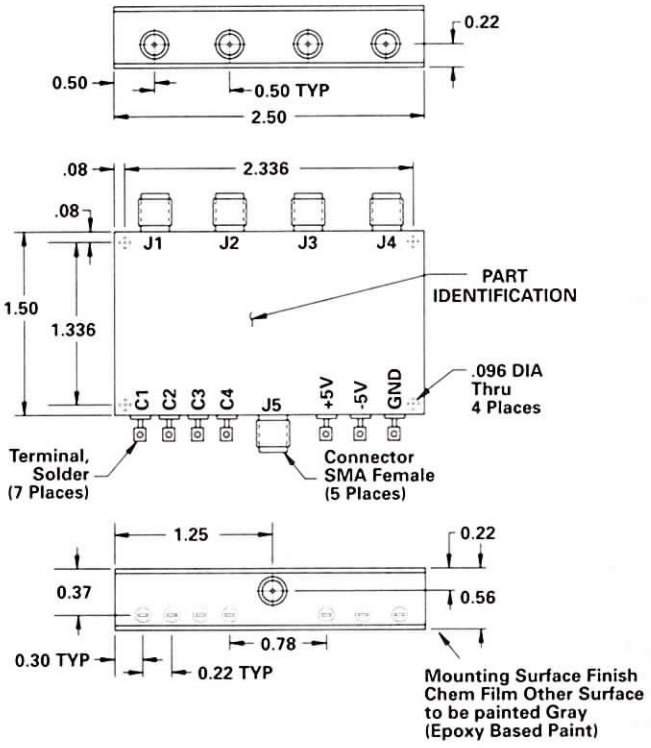

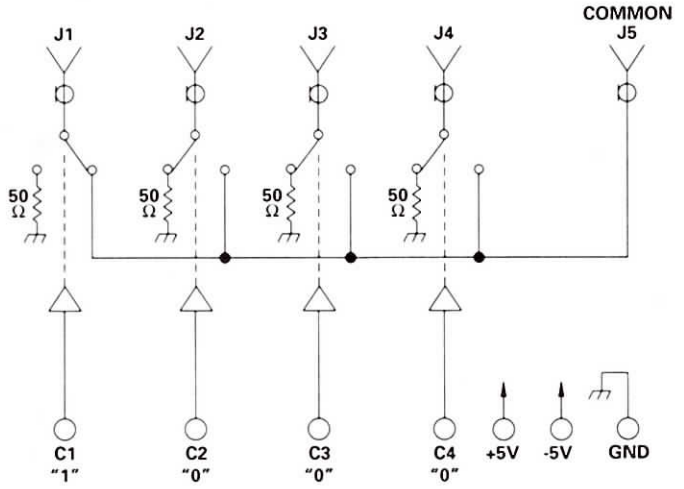

TYPICAL PERFORMANCE

at 25°C

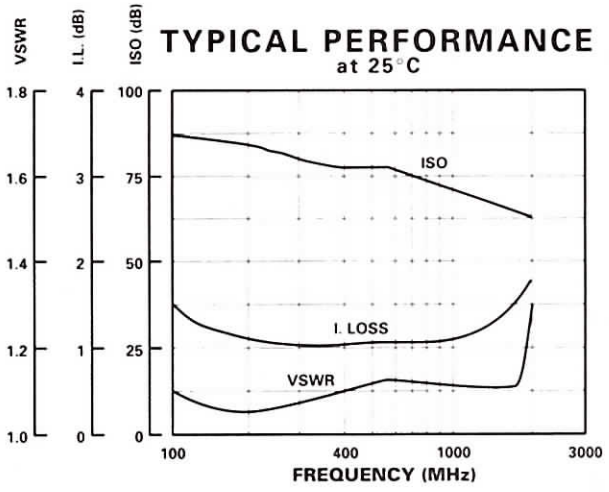

GUARANTEED PERFORMANCE

Parameter		Min	Typ	Max	Units	Conditions
Operating Frequency		830		930	MHz	
DC Current			15	30	mA	At +5 VDC Supply
			15	30	mA	At -5 VDC Supply
Control Type			TTL			4 Line "1" = Thru
Isolation		70	71		dB	
Insertion Loss			1.23	2.0	dB	
VSWR	*Thru*		1.16/1	1.6/1		
	Termination		1.23/1	1.6/1		
Impedance			50		OHMS	
Switching Speed			0.2	1	µSEC	50% TTL to 90% / 10% RF
Transition (Rise/Fall) Time			65		nSEC	10% / 90% to 90% / 10% RF
Switching (Video) Transients			200		mV	Peak Value
Intercept Points	*2nd*		+74		dBm	800 MHz / 970 MHz
	3rd		+45		dBm	900 MHz / 970 MHz
RF Power	*Operate*		+25	+20	dBm	0.1 dB Compression
	No Damage		+30		dBm	
Operating Temperature		-55	+25	+85	°C	TA

DAICO *Industries*

310.507.3242 • FAX 310.507.5701 • www.daico.com

MODEL NUMBER 100C0485	SP4T Relay

FEATURES

- DC-500 MHz
- 70 dB Isolation
- Non-Reflective
- 50 Watt CW
- SMA Connectors

SP4T

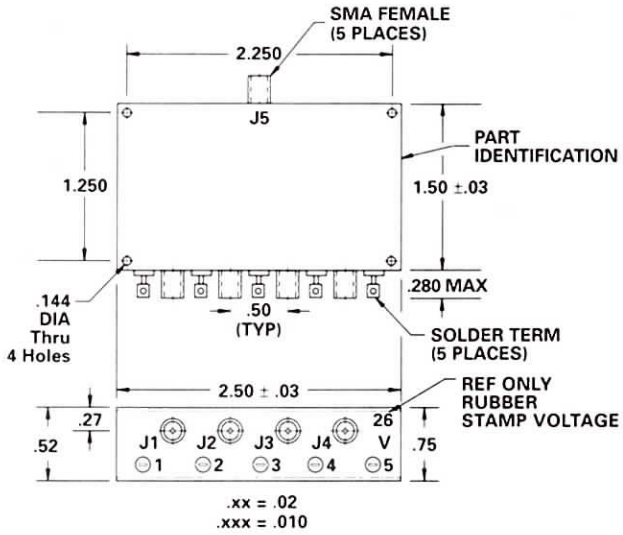

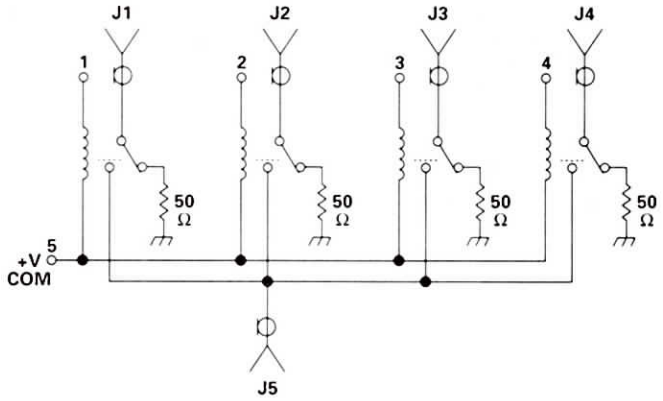

GUARANTEED PERFORMANCE

Parameter		Min	Typ	Max	Units	Conditions
Operating Frequency		DC		500	MHz	
DC Voltage						See Table
Insertion Loss			0.7	1.0	dB	
Isolation		70	74		dB	
VSWR	*Thru*		1.35/1	1.6/1		
Impedance			50		OHMS	
Switching Speed				3	mSEC	
RF Power	*Operate*			50	W	CW
Operating Temperature		-20	+25	+55	°C	TA

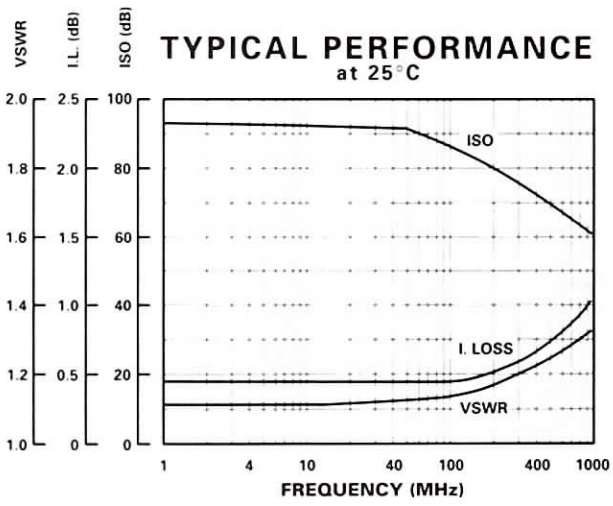

CONTROL VOLTAGE TABLE	
Voltage	Current - Typical
6	130 mA per throw
12	64 mA per throw
18	42 mA per throw
26	34 mA per throw

PART NO. EXAMPLE - SEE TABLE
100C0485 - 6
Basic Part Number — Dash No. per table

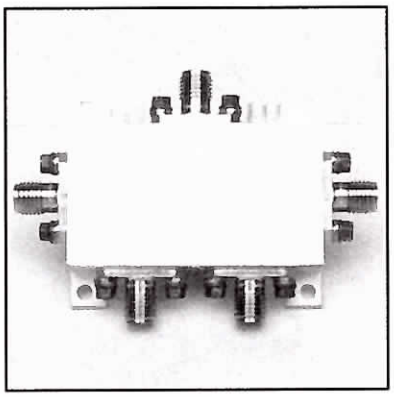

MODEL NUMBER DSW46218

GaAs SP4T

FEATURES

- 50-650 MHz
- Highest Intercept Points, +57 dBm
- Fastest Switching Speed, 62 nSec
- High Isolation, 80 dB
- Phase Tracking

SP4T

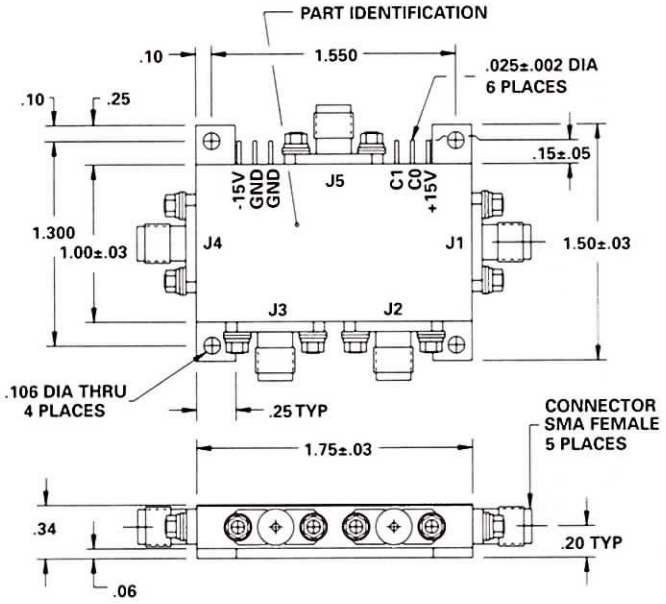

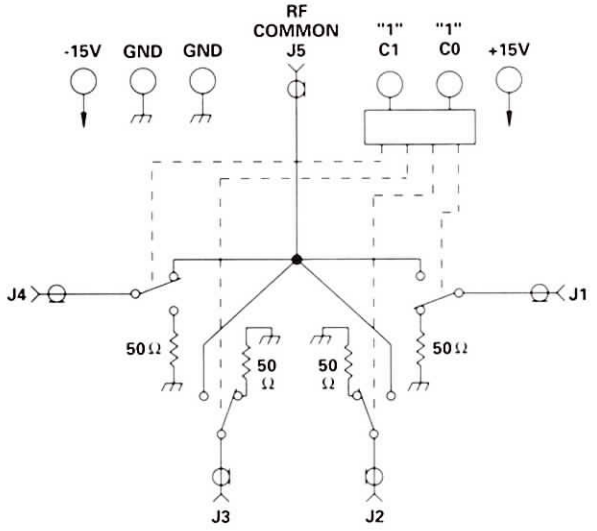

TYPICAL PERFORMANCE

at 25°C

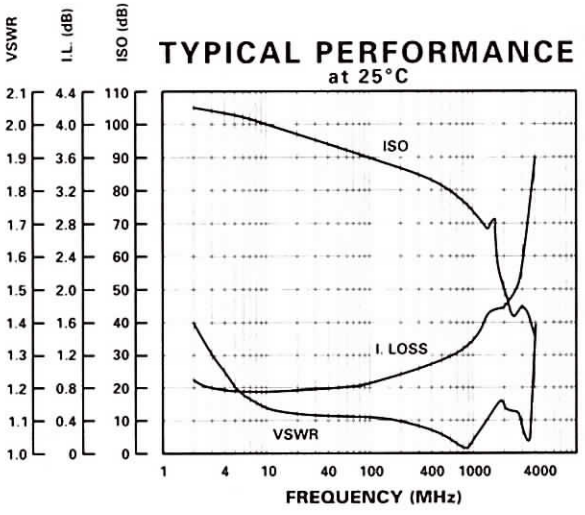

LOGIC TABLE		
C1	C0	RF PATH
0	0	J5-J1
0	1	J5-J2
1	0	J5-J3
1	1	J5-J4

GUARANTEED PERFORMANCE

Parameter		Min	Typ	Max	Units	Conditions
Operating Frequency		50		650	MHz	
DC Current			10	15	mA	At +15 VDC Supply
			2	5	mA	At -15 VDC Supply
Control Type			TTL			See Logic Table
Control Current	*High*		±1	±100	µA	VIH = +2.7V
	Low		±1	±100	µA	VIL = +0.5V
Isolation		75	80		dB	
Insertion Loss			1.14	1.5	dB	
Insertion Loss Flatness			±0.16	±0.25	dB	
Phase Tracking			±0.30	±2	deg	Port to Port, 200 - 600 MHz
Time Delay			±1.3	±5.5	psec	Port to Port, 200 - 600 MHz
Amplitude Tracking			±0.01	±0.1	dB	Port to Port
VSWR	*Thru*		1.1/1	1.15/1		200 - 600 MHz
	Termination		1.15/1	1.5/1		
Impedance			50		OHMS	
Switching Speed			62	100	nSEC	50% TTL to 90% / 10% RF
Transition (Rise/Fall) Time			16		nSEC	10% / 90% or 90% / 10% RF
Switching Transients			-92		dBm	In 3KHz BW At 1KHz PRF
Intercept Points	*2nd*		+100		dBm	120 MHz / 70 MHz
	3rd	+45	+57		dBm	60 MHz / 70 MHz
RF Power	*Operate*		+22	+20	dBm	(1.0 dB Compression)
	No Damage			+27	dBm	
Operating Temperature		-55	+25	+125	°C	TA

MODEL NUMBER DS0028

PIN Diode SP5T

FEATURES

- 20-300 MHz
- 0.65 dB Insertion Loss
- Non-Reflective
- TTL Driver
- Small 24 Pin DIP
- Low Cost

SP5T

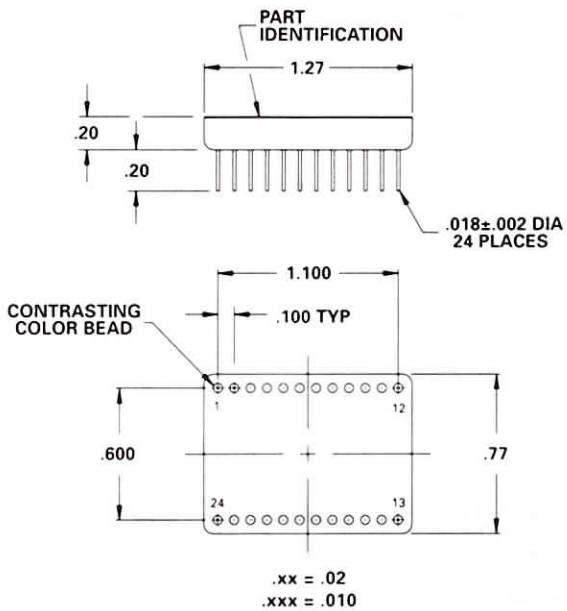

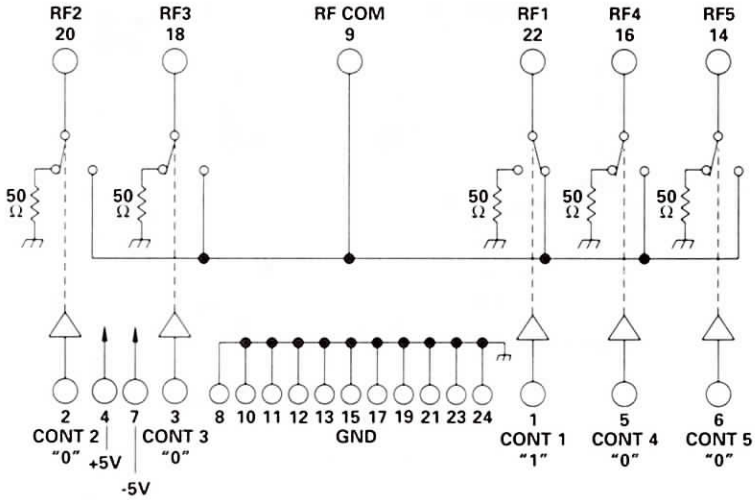

TYPICAL PERFORMANCE

at 25°C

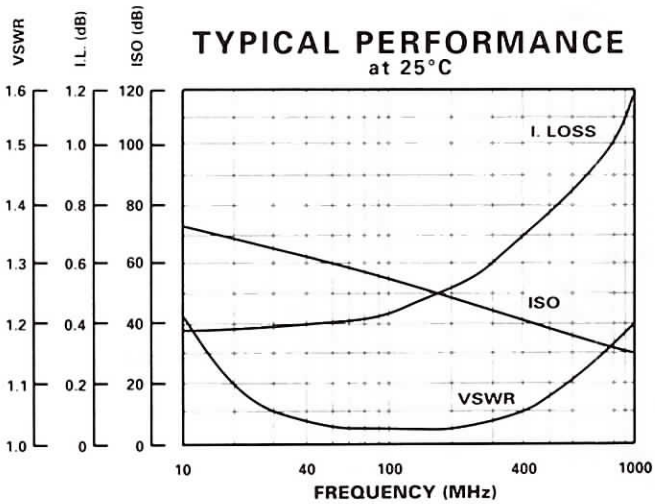

GUARANTEED PERFORMANCE

Parameter		Min	Typ	Max	Units	Conditions
Operating Frequency		20		300	MHz	
DC Current			20	32	mA	At +5 VDC Supply
			90	140	mA	At -5 VDC Supply
Control Type			TTL			5 Line Logic "1" = On Logic "0" = Off
Control Current	*High*			100	µA	VIH = +2.7V
	Low			-800	µA	VIL = +0.4V
Insertion Loss			0.7	1	dB	
Isolation		45	48		dB	20 - 175 MHz
		40	43		dB	175 - 300 MHz
VSWR	*Thru*		1.1/1	1.3/1		
Impedance			50		OHMS	
Switching Speed				1	µSEC	50% TTL to 90% / 10% RF
RF Power	*Operate*		+13	+10	dBm	0.1 dB Comp 20 - 100 MHz
			+16	+13	dBm	0.1 dB Comp 100 - 300 MHz
	No Damage			+25	dBm	
Operating Temperature		-55	+25	+125	°C	TA

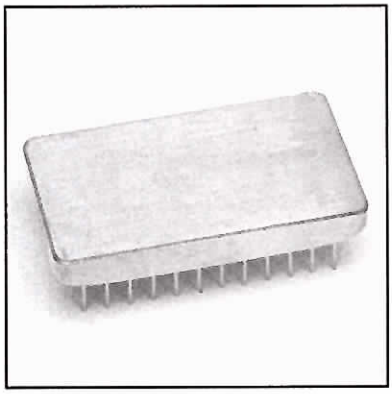

MODEL NUMBER DS0345

PIN Diode SP5T

FEATURES

- 60 - 1500 MHz
- 8 mA, +15 VDC
- CMOS Driver
- 24 Pin DIP
- Low Cost

SP5T

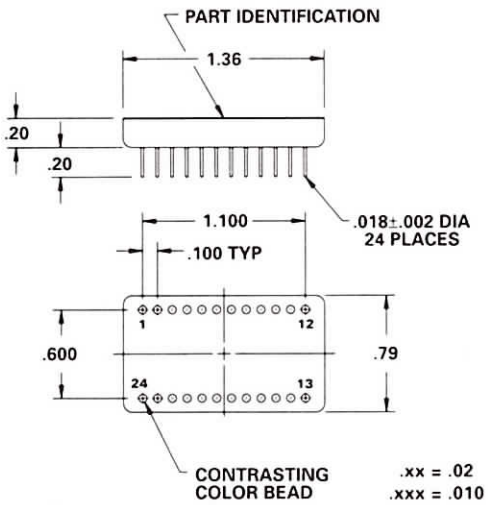

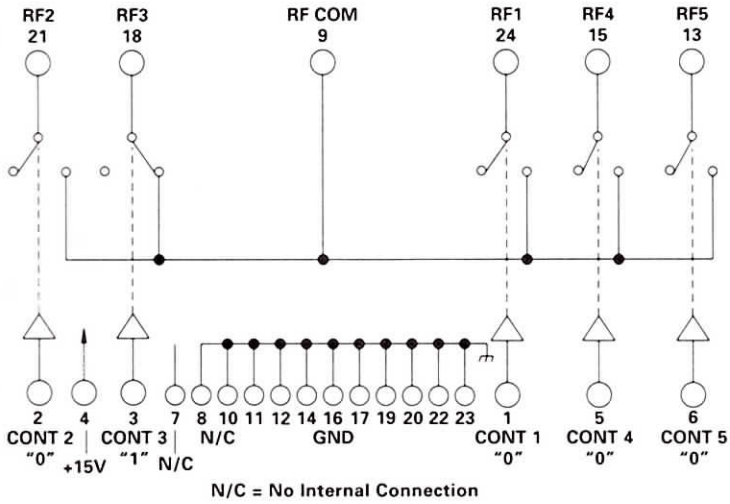

TYPICAL PERFORMANCE
at 25°C

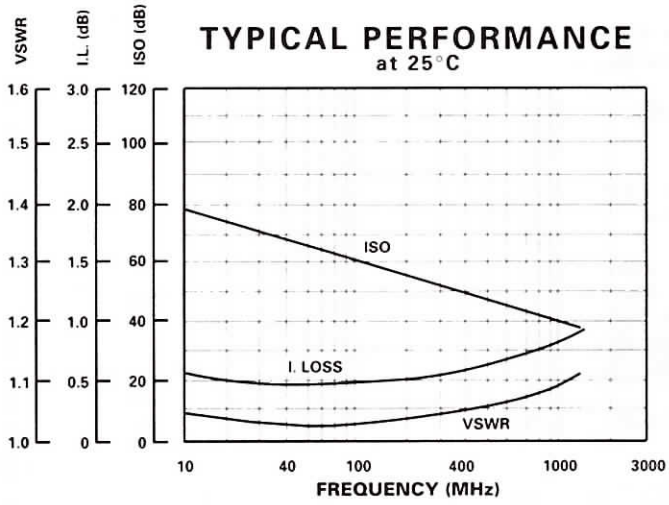

GUARANTEED PERFORMANCE

Parameter		Min	Typ	Max	Units	Conditions
Operating Frequency		60		1500	MHz	
DC Current			8	12	mA	At +15 VDC Supply
Control Type			CMOS			5 Line Logic "1" = On Logic "0" = Off
Control Current	*High*			±10	µA	VIH = + V
	Low			±10	µA	VIL = 0 V
Insertion Loss			1.0	1.5	dB	
Isolation		25	36		dB	
VSWR	*Thru*		1.1/1	1.3/1		
Impedance			50		OHMS	
Switching Speed			9	20	µSEC	50% Control to 90% / 10% RF
RF Power	*Operate*		+19	+10	dBm	
Operating Temperature		-55	+25	+125	°C	TA

Add - RL to P/N For Reverse Logic: Logic "0" = On

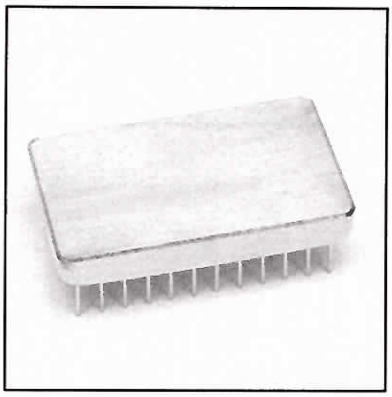

MODEL NUMBER DSW52179

Switch SP5T

FEATURES

- DC- 1000 MHz
- 36 nSec Switching Speed
- High Isolation, 70 dB Typical
- Low DC Bias, < 1 mA Typical

SP5T

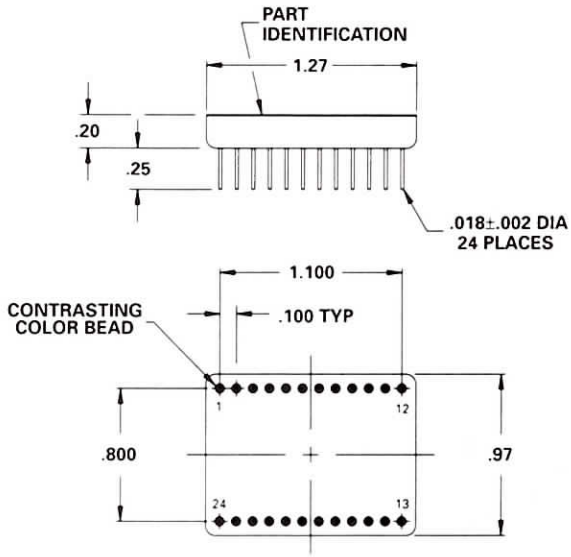

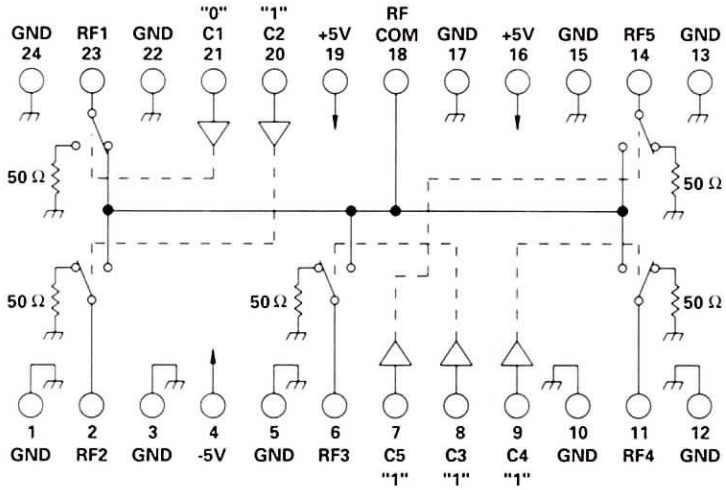

TYPICAL PERFORMANCE

at 25°C

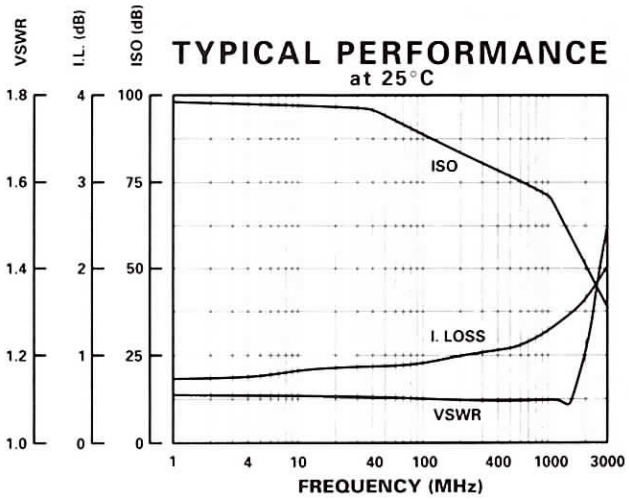

GUARANTEED PERFORMANCE

Parameter		Min	Typ	Max	Units	Conditions
Operating Frequency		DC		1000	MHz	
DC Current			0.9	8	mA	At +5 VDC Supply
			0.02	2	mA	At -5 VDC Supply
Control Type			TTL			Logic "0"= Thru
Control Current	*High*		0		µA	VIH = +2.7V
	Low		0		µA	VIL = +0.5V
Isolation		80	98		dB	DC - 50 MHz
		70	78		dBm	50 - 500 MHz
		60	71		dBm	500 - 1000 MHz
Insertion Loss			1.20	1.8	dB	
VSWR	*Thru*		1.10/1	1.3/1		
	Termination		1.08/1	2.0/1		
Impedance			50		OHMS	
Switching Speed			36	70	nSEC	50% TTL to 90% / 10% RF
Transition (Rise/Fall) Time			5		nSEC	10% / 90% or 90% / 10% RF
Switching (Video) Transients			6		mV	Peak Value
Intercept Points	*2nd*		+74		dBm	450 MHz / 150 MHz
	3rd	+30	+40		dBm	225 MHz / 150 MHz
RF Power	*Operate*		+12	+10	dBm	DC - 300 MHz
			+17	+13	dBm	300 - 1000 MHz
	No Damage			+25	dBm	
Operating Temperature		-54	+25	+105	°C	TA

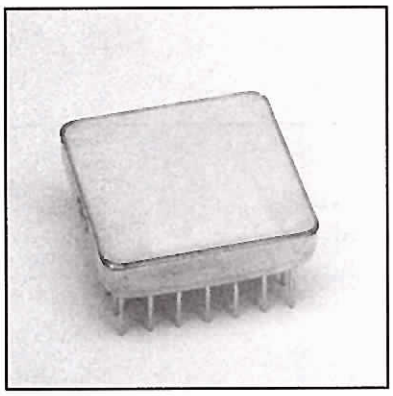

MODEL NUMBER CSW52216

Switch SP5T

FEATURES

- 1 - 2800 MHz
- 65 dB Isolation
- +40 dB 3rd Order Intercept Point

SP5T

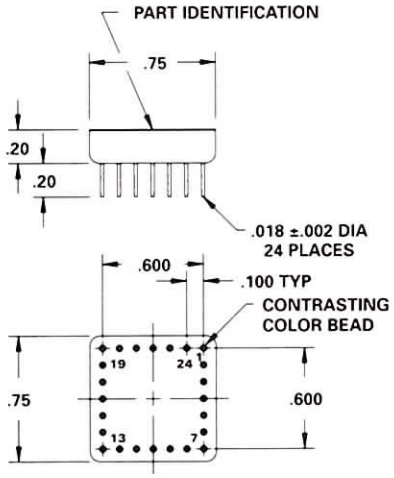

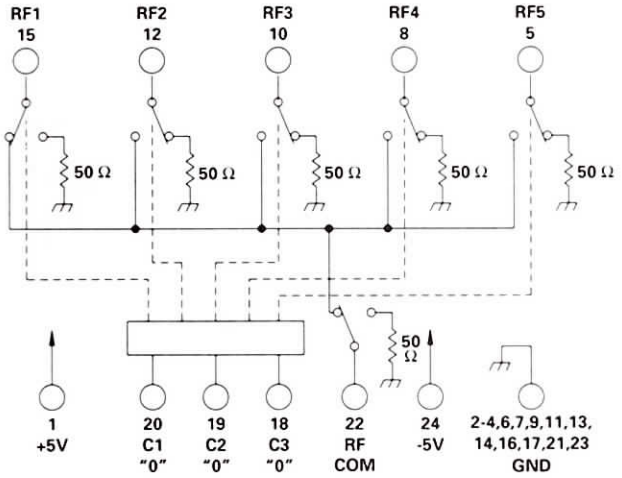

LOGIC TABLE

CONTROL INPUT C3	C2	C1	RF COM TO
0	0	0	RF1
0	0	1	RF2
0	1	0	RF3
0	1	1	RF4
1	0	0	RF5
1	0	1	ALL OFF - NO TERM @ COMMON PORT
1	1	0	ALL OFF - NO TERM @ COMMON PORT
1	1	1	ALL OFF - COMMON PORT TERMINATED

TYPICAL PERFORMANCE
at 25°C

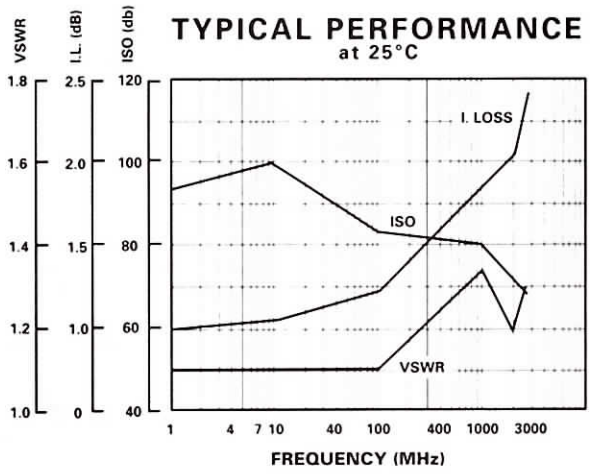

GUARANTEED PERFORMANCE

Parameter		Min	Typ	Max	Units	Conditions
Operating Frequency		1		2800	MHz	
DC Current				10	mA	At +5 VDC Supply
				10	mA	At -5 VDC Supply
Control Type			TTL			See Table
Control Current	*High*			±1	µA	VIH = +2.7 V
	Low			±1	µA	VIL = +0.5 V
Insertion Loss				2	dB	1 - 700 MHz
				3	dB	700 - 2800 MHz
Isolation		60	65		dB	
VSWR	*Thru*			1.4/1		
Impedance			50		OHMS	
Switching Speed				1	µSec	50% TTL to 90% / 10% RF
Transition (Rise/Fall) Time			30		nSec	10% / 90% or 90% / 10%
Switching (Video) Transients			50		mV	Peak Value
Intercept Points	*2nd*	+70			dBm	
	3rd	+40			dBm	
RF Power	*Operate*			+13	dBm	1 - 300 MHz
	For 0.1 dB Comp			+17	dBm	300 - 2800 MHz
	No Damage			+27	dBm	
Operating Temperature		-20	+25	+70	°C	TA
Storage Temperature		-45		+85	°C	TA

DAICO *Industries*

310.507.3242 • FAX 310.507.5701 • www.daico.com

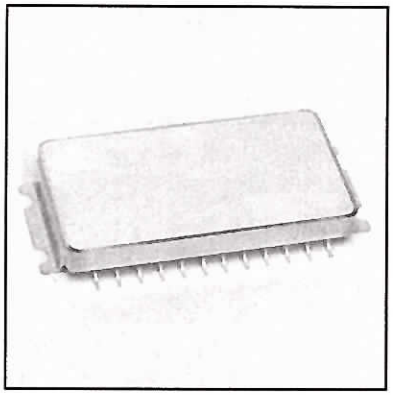

MODEL NUMBER DS0705

GaAs SP5T

FEATURES

- 10 - 400 MHz
- 0.5 mA @ +5 VDC
- 1.0 dB Insertion Loss
- 40 mV Transients
- Non-Reflective
- TTL Driver
- 24 Pin Surface Mount Package

SP5T

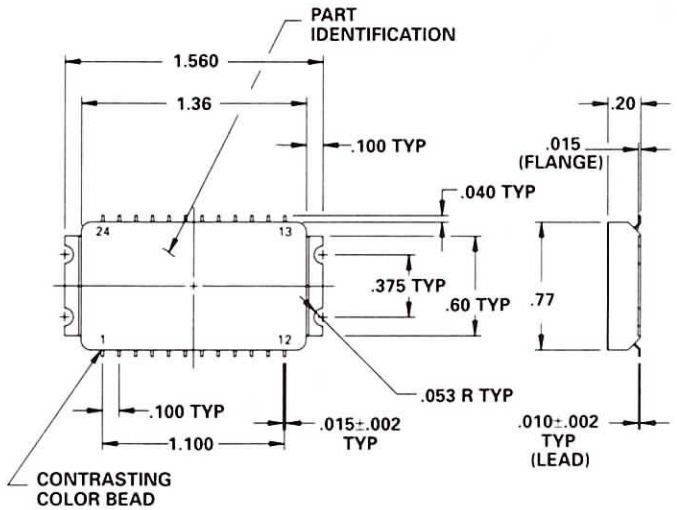

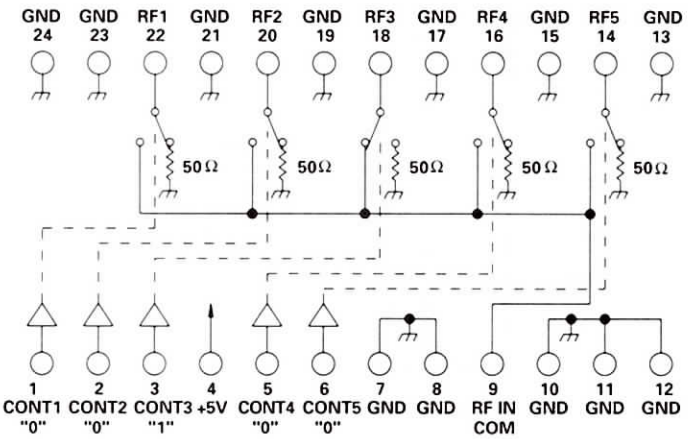

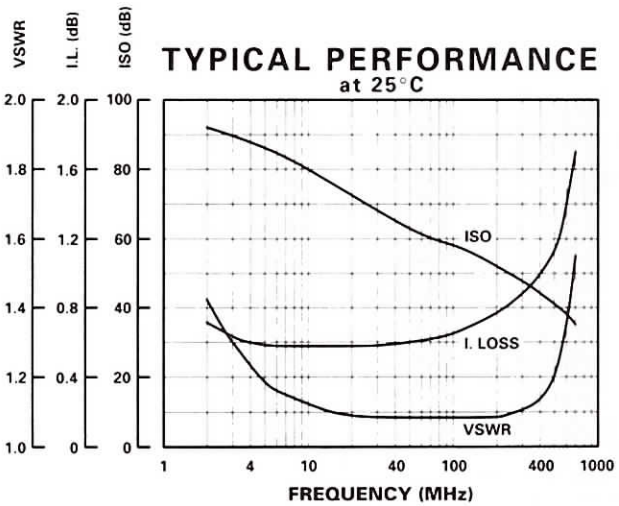

GUARANTEED PERFORMANCE

Parameter		Min	Typ	Max	Units	Conditions
Operating Frequency		10		400	MHz	
DC Current			0.5	5	mA	At +5 VDC Supply
Control Type			TTL			5 Line Logic "1"= Thru Logic "0"= Isolation
Control Current	*High*		0	±40	µA	VIH = +3.0V
	Low		0	±40	µA	VIL = +0.5V
Insertion Loss			0.7	1.0	dB	10 - 175 MHz
			1.0	1.4	dB	175 - 400 MHz
Isolation		40	53		dB	10 - 175 MHz
		30	43		dB	175 - 400 MHz
VSWR	*Thru*		1.1/1	1.3/1		
	Termination		1.1/1	1.3/1		
Impedance			50		OHMS	
Switching Speed			60	100	nSEC	50% TTL to 90% / 10% RF
Transition (Rise/Fall) Time			30		nSEC	90% / 10% or 10% / 90% RF
Switching (Video) Transients			40	100	mV	
Intercept Points	*2nd*		+84		dBm	214 MHz / 127 MHz
	3rd	+45	+55		dBm	107 MHz / 127 MHz
RF Power	*Operate*		+19	+13	dBm	0.1 dB Compression
			+24	+20	dBm	0.1 dB Comp. Above 100 MHz
	No Damage			+30	dBm	
Operating Temperature		-55	+25	+125	°C	TA

MODEL NUMBER DSW56178	Switch SP5T

FEATURES

- 2-2500 MHz
- 1.5 dB Isolation Loss
- 50 dB Isolation

SP5T

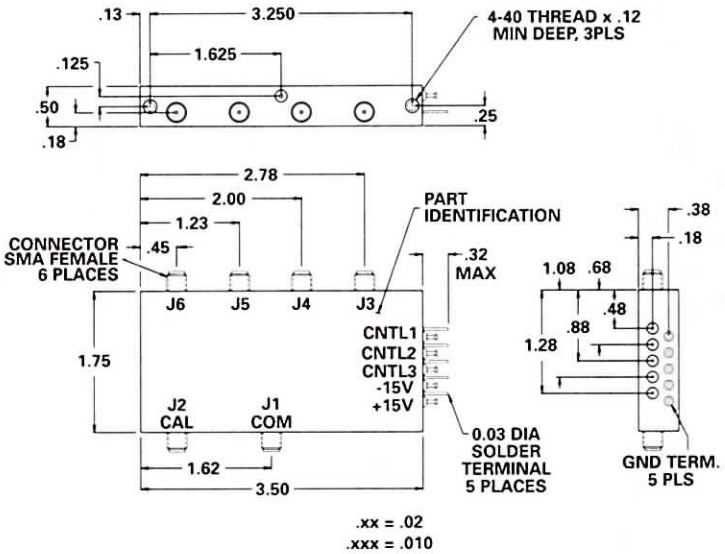

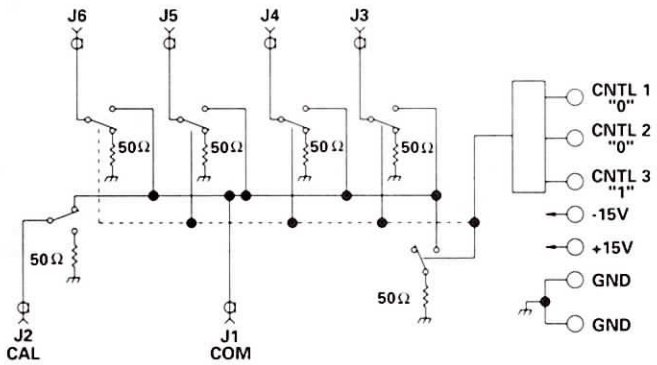

TYPICAL PERFORMANCE
at 25°C

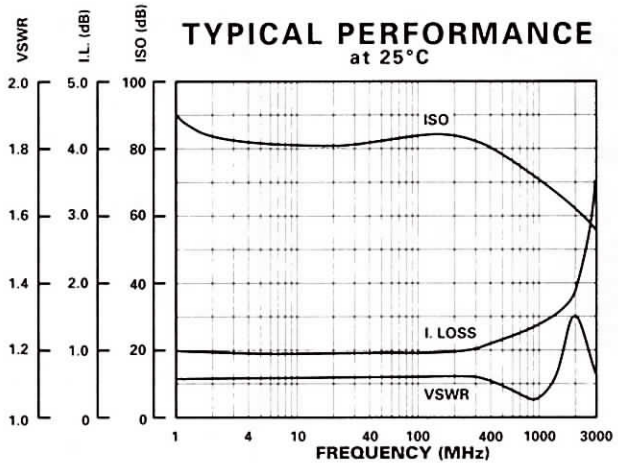

Logic Table			
INPUT CNTL			Function
CNTL 1	CNTL 2	CNTL 3	
0	0	0	All Off
0	0	1	J1 - J2
0	1	0	J1 - J3
0	1	1	J1 - J4
1	0	0	J1 - J5
1	0	1	J1 - J6
1	1	0	All Off
1	1	1	All Off

GUARANTEED PERFORMANCE

Parameter		Min	Typ	Max	Units	Conditions
Operating Frequency		2		2500	MHz	
DC Current			35	50	mA	At +15 VDC Supply
			23	50	mA	At -15 VDC Supply
Control Type			TTL			3 Line, See Logic Table
Control Current	*High*		1	20	µA	VIH = +2.7 V
	Low		1	-400	µA	VIL = +0.5 V
Isolation		50	56		dB	
Insertion Loss			1.3	1.5	dB	2 - 1000 MHz
			2.5	3	dB	1000 - 2500 MHz
Amplitude Balance			±0.1	±0.3	dB	Reference between the calibration port and any input port of the switch
Phase Tracking: Port to Port			0.6	2	DEG	2 - 1000 MHz
(Max Differential)			1.5	10	DEG	1000 - 2500 MHz
VSWR	*Thru*			1.4/1		
	Termination		1.2/1	1.7/1		2 - 5 MHz
			1.3/1	1.5/1		5 - 2000 MHz
Impedance			50		OHMS	
Switching Speed			80	100	µSEC	50% TTL to 90% / 10% RF
Transition (Rise/Fall) Time			10	100	µSEC	10% / 90% or 90% / 10% RF
Switching (Video) Transients			0.7	1.4	V	Peak Value
Intercept Points	*2nd*	+60	+64		dBm	
	3rd	+30	+43		dBm	
RF Power	*Operate*		+19	+15	dBm	0.1 dB Compression
	No Damage			+30	dBm	
Operating Temperature		-55	+25	+85	°C	TA

MODEL NUMBER 100C0614

SP5T Relay

FEATURES

- DC-450 MHz
- 20 Watts CW
- Non-Reflective
- SMA Connectors

SP5T

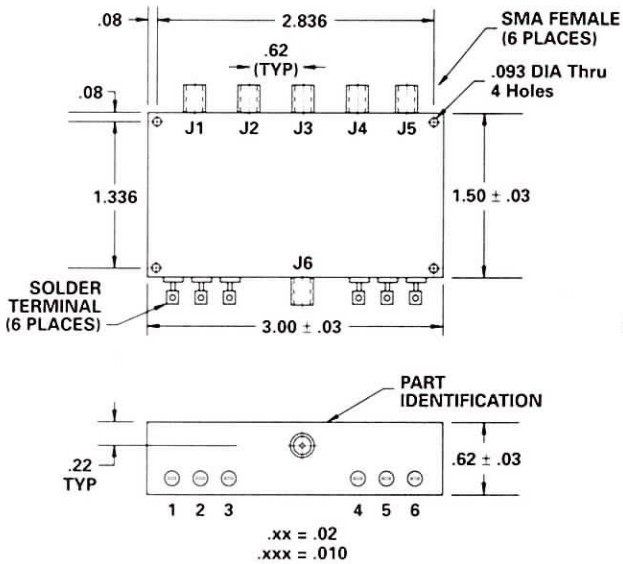

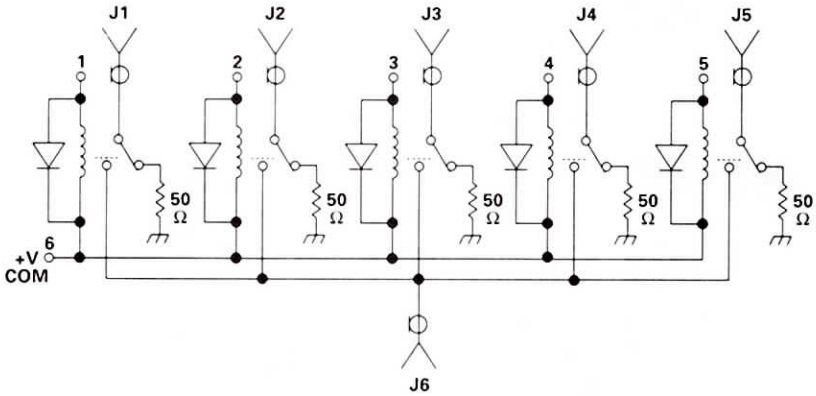

TYPICAL PERFORMANCE
at 25°C

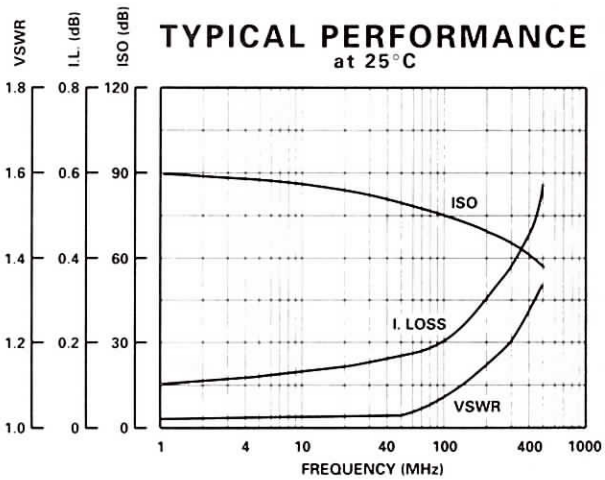

GUARANTEED PERFORMANCE

Parameter		Min	Typ	Max	Units	Conditions
Operating Frequency		DC		450	MHz	
DC Voltage						See Table
Insertion Loss			0.35	0.4	dB	DC - 250 MHz
			0.5	0.6	dB	250 - 450 MHz
Isolation		60	70		dB	DC - 250 MHz
		50	60		dB	250 - 450 MHz
VSWR	*Thru*		1.15/1	1.2/1		DC - 250 MHz
			1.3/1	1.4/1		250 - 450 MHz
Impedance			50		OHMS	
Switching Speed				5	mSEC	
RF Power	*Operate*			20	W	CW
Operating Temperature		-55	+25	+85	°C	TA

CONTROL VOLTAGE TABLE	
Voltage	Current - Typical
6	65 mA per throw
12	32 mA per throw
18	21 mA per throw
26	17 mA per throw

PART NO. EXAMPLE - SEE TABLE

100C0614 - 26

Basic Part Number — Dash No. same as coil voltage

MODEL NUMBER CSWM9096	Switch SP5T

FEATURES

- 1.5-30 MHz
- +116 dBm 2nd Isolation Point
- +60 dBm 3rd Isolation Point
- Amp/Phase Match
- 3 Watts

SP5T

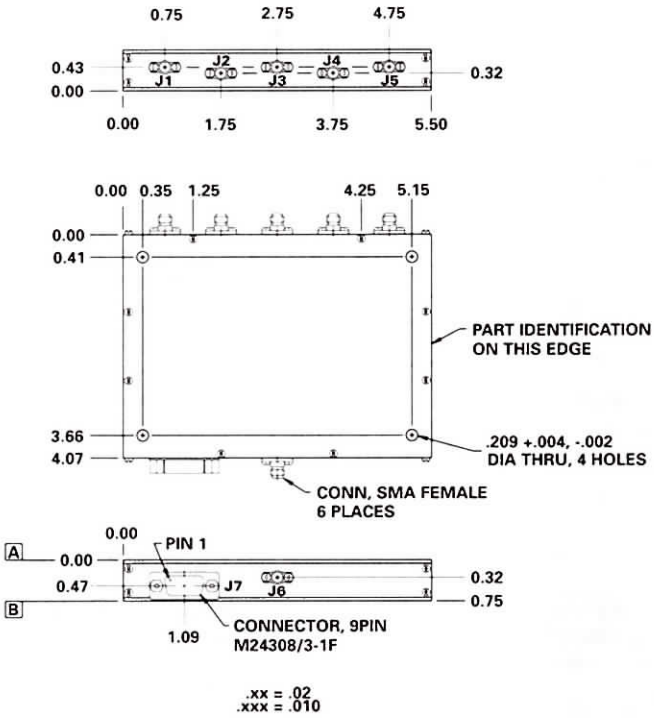

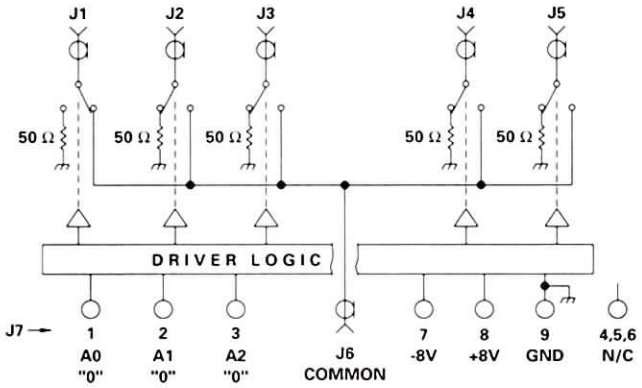

TRUTH TABLE

CONTROL			RF COMMON (J6) TO				
A2	A1	A0	J1	J2	J3	J4	J5
0	0	0	ON	OFF	OFF	OFF	OFF
0	0	1	OFF	ON	OFF	OFF	OFF
0	1	0	OFF	OFF	ON	OFF	OFF
0	1	1	OFF	OFF	OFF	ON	OFF
1	0	0	OFF	OFF	OFF	OFF	ON
1	0	1	OFF	OFF	OFF	OFF	OFF
1	1	0	OFF	OFF	OFF	OFF	OFF
1	1	1	OFF	OFF	OFF	OFF	OFF

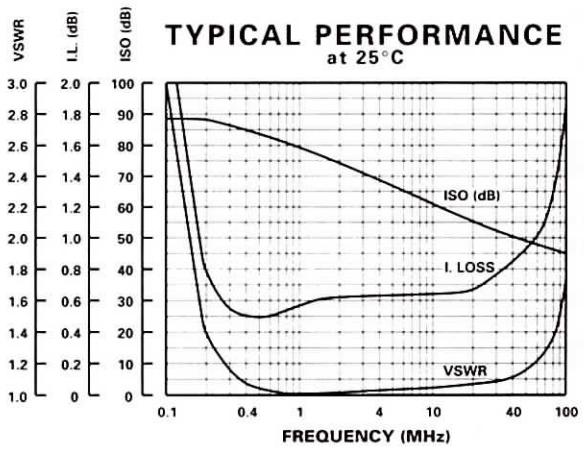

GUARANTEED PERFORMANCE

Parameter		Min	Typ	Max	Units	Conditions
Operating Frequency		1.5		30	MHz	
DC Current			31	50	mA	At +8 VDC Supply
			3	10	mA	At -8 VDC Supply
Control Type			TTL			5 Line See Table
Control Current	*High*		±1	±20	µA	VIH = +2.7 V
	Low		±1	±20	µA	VIL = +0.5 V
Insertion Loss			0.76	1.1	dB	
Phase Match Port to Port			±0.5	±2	deg	
Amplitude Matching Port to Port			±0.05	±0.5	dB	
Isolation		45	52		dB	
VSWR	*Thru*		1.1/1	1.25/1		
	Termination		1.1/1	1.5/1		
Impedance			50		OHMS	
Switching Speed			0.13	500	µSec	50% TTL to 90% / 10% RF
Transition (Rise/Fall) Time			40		nSec	10% / 90% or 90% / 10% RF
Switching (Video) Transients			10	100	mV	Peak Value
Intercept Points	*2nd*	+107	+116		dBm	
	3rd	+58	+60		dBm	
RF Power	*Operate*		+36	+30	dBm	1 dB Compression
	No Damage			3	W	Thru or Common Port
Operating Temperature		0	+25	+40	°C	TA

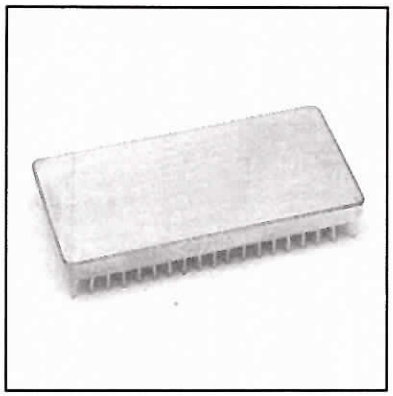

MODEL NUMBER DS0506

PIN Diode SP6T

FEATURES

- 100-600 MHz
- 0.6 dB Insertion Loss
- Handles +25 dBm
- 250 nSec Switching Speed
- Non-Reflective
- TTL Driver
- 38 Pin DIP

SP6T

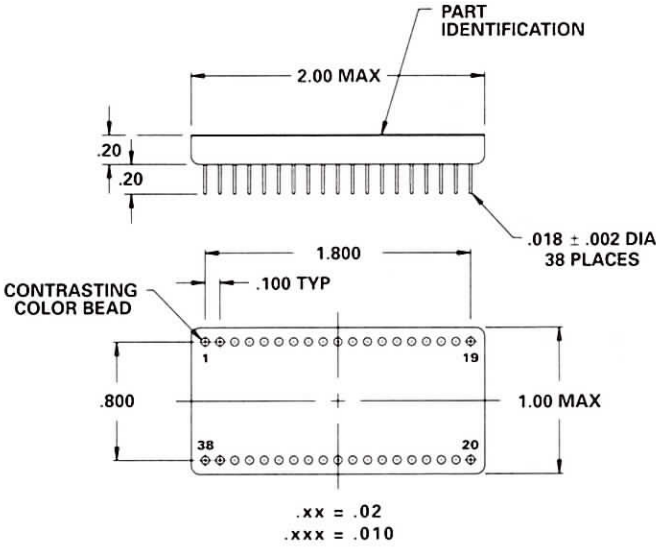

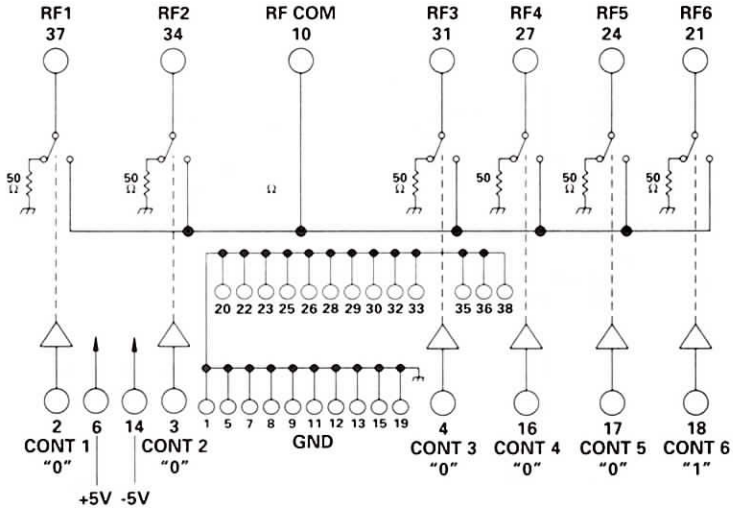

TYPICAL PERFORMANCE
at 25°C

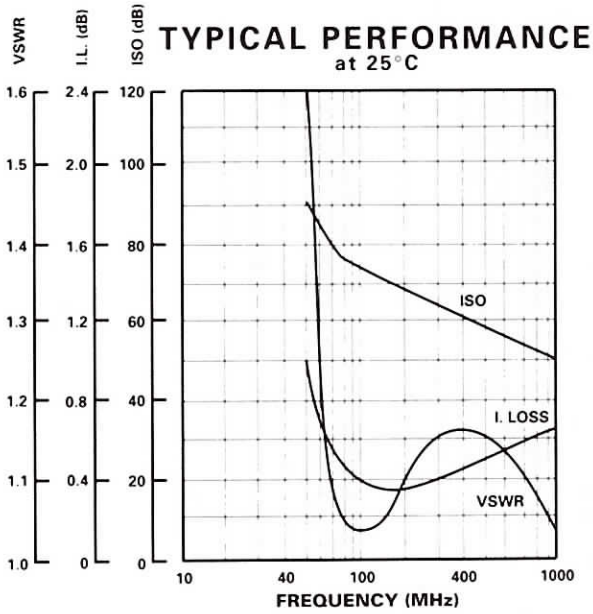

GUARANTEED PERFORMANCE

Parameter		Min	Typ	Max	Units	Conditions
Operating Frequency		100		600	MHz	
DC Current			25	35	mA	At +5 VDC Supply
			30	45	mA	At -5 VDC Supply
Control Type			TTL			6 Line
						Logic "0" = Off
						Logic "1" = On
Control Current	*High*			40	µA	VIH = +2.7 V
	Low			-400	µA	VIL = +0.5 V
Insertion Loss			0.6	1.0	dB	
Isolation		50	56		dB	
VSWR			1.2/1	1.50/1		
Impedance			50		OHMS	
Switching Speed			0.25	1	µSEC	50% TTL to 90% / 10% RF
Transition (Rise/Fall) Time			0.1		µSEC	10% / 90% or 90% / 10% RF
Switching (Video) Transients			700		mV	Peak Value
Intercept Points	*2nd*		+90		dBm	60 MHz / 160 MHz
	3rd		+50		dBm	130 MHz / 160 MHz
RF Power	*Operate*		+25	+20	dBm	0.1 dB Compression
	No Damage			+30	dBm	
Operating Temperature		-55	+25	+125	°C	TA

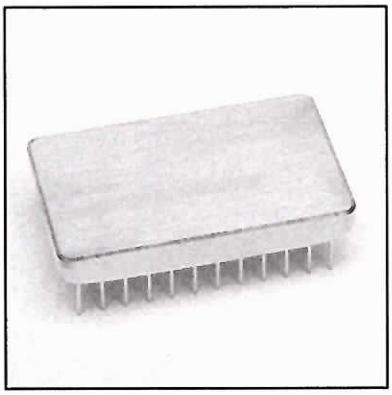

MODEL NUMBER DSW62188

GaAs SP6T

FEATURES

- 10 - 2000 MHz
- 40 nSec Switching Speed
- TTL Control
- 24 Pin DIP

SP6T

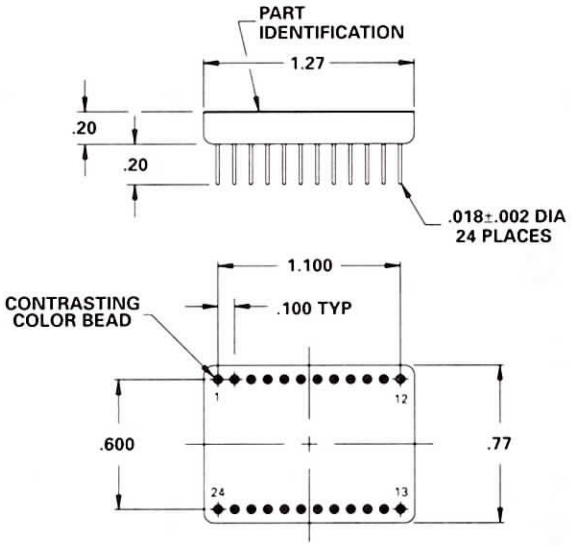

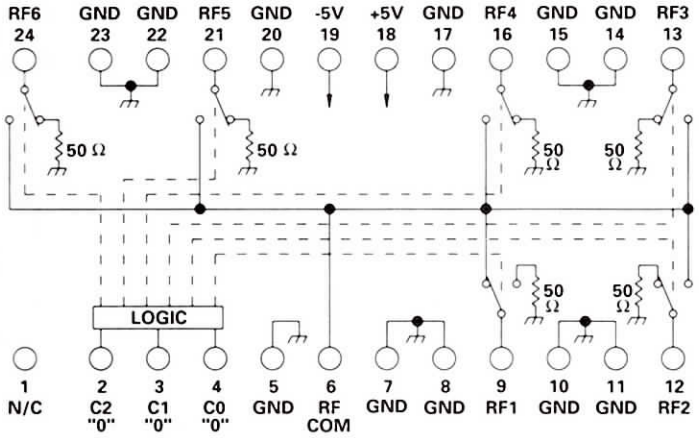

N/C = NO INTERNAL CONNECTION

TYPICAL PERFORMANCE

at 25°C

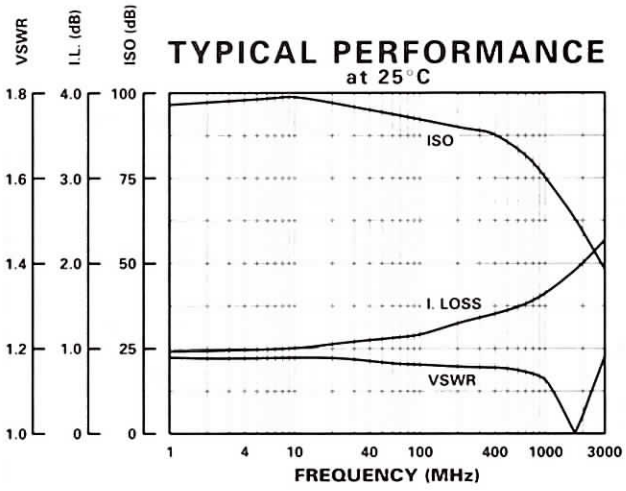

GUARANTEED PERFORMANCE

Parameter		Min	Typ	Max	Units	Conditions
Operating Frequency		10		2000	MHz	
DC Current			0.027	3	mA	At +5 VDC Supply
			0.037	5	mA	At -5 VDC Supply
Control Type			TTL			3 Line BCD
						See Table
Control Current	*High*		0	2	µA	VIH = +2.7V
	Low		0	2	µA	VIL = +0.5V
Insertion Loss			1.6	2.0	dB	10 - 950 MHz
			2.0	2.5	dB	950 - 2000 MHz
Isolation		40	58		dB	
VSWR	*Thru*		1.18/1	1.6/1		
	Termination		1.13/1	2.0/1		
Impedance			50		OHMS	
Switching Speed			40	75	nSEC	50% TTL to 90% / 10% RF
Transition (Rise/Fall) Time			4		nSEC	10% / 90% or 90% / 10% RF
Switching (Video) Transients			39		mV	Peak Value
Intercept Points	*2nd*		+75		dBm	
	3rd		+38		dBm	
RF Power	*Operate*		+14	+12	dBm	0.1 dB Compression
			+20	+18	dBm	1 dB Compression
Operating Temperature		-55	+25	+125	C	TA

LOGIC TABLE

C2	C1	C0	Thru
0	0	0	RF COM To RF1
0	0	1	RF COM To RF2
0	1	0	RF COM To RF3
0	1	1	RF COM To RF4
1	0	0	RF COM To RF5
1	0	1	RF COM To RF6
1	1	0	All Off
1	1	1	All Off

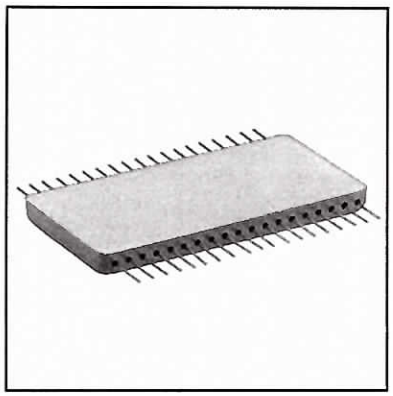

MODEL NUMBER DSW68034

PIN Diode SP6T

FEATURES

- 100 - 1000 MHz
- 50 dB Isolation
- +25 dBm to 0.1 dB Compression
- 38 Pin Flatpack

SP6T

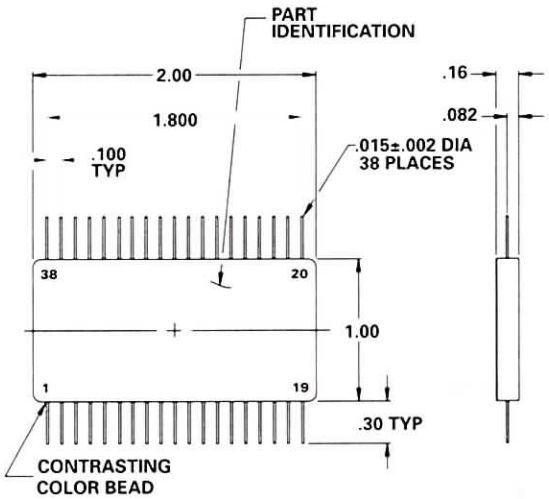

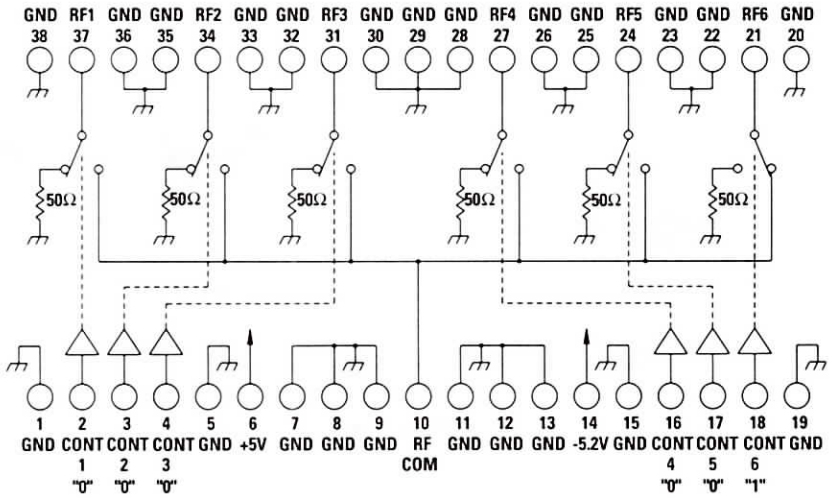

TYPICAL PERFORMANCE

at 25°C

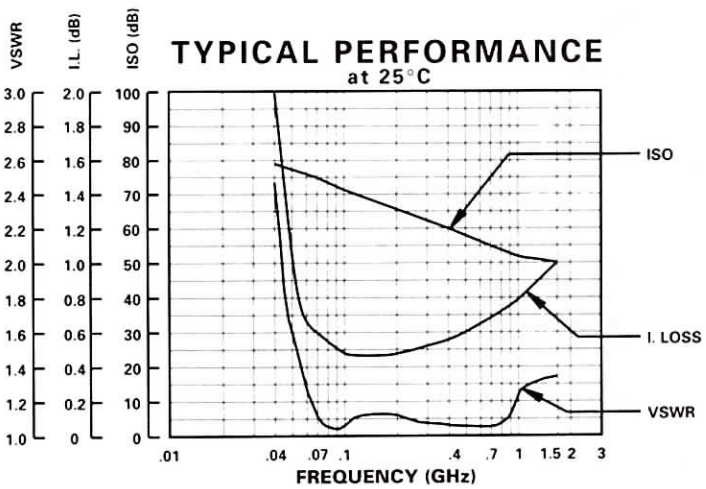

GUARANTEED PERFORMANCE

Parameter		Min	Typ	Max	Units	Conditions
Operating Frequency		100		1000	MHz	
DC Current			25	35	mA	At +5 VDC Supply
			30	45	mA	At -5.2 VDC Supply
Control Type			TTL			6 Lines Logic "1" = On Logic "0" = Off
Control Current	*High*		0	50	µA	VIH = +2.0V
	Low		-0.26	-500	µA	VIL = +0.8V
Insertion Loss			.8	1.5	dB	
Isolation		45	53		dB	
VSWR	*Thru*		1.15/1	1.5/1		
	Termination		1.15/1	1.5/1		
Impedance			50		OHMS	
Switching Speed			0.245	1.0	µSEC	50% TTL to 90% / 10% RF
Transition (Rise/Fall) Time			100		nSEC	10% / 90% or 90% / 10% RF
Switching (Video) Transients			0.70	1.2	V	Peak Value
Intercept Points	*2nd*		+90		dBm	160 / 60 MHz
	3rd	+40	+50		dBm	130 / 160 MHz
RF Power	*Operate*		+25	+20	dBm	0.1 dB Compression
	No Damage			+30	dBm	
Operating Temperature		-55	+25	+125	°C	TA

MODEL NUMBER 100C1296	High Isolation PIN Diode SP6T

FEATURES

- 15 - 1000 MHz
- High Isolation
- +40 dBm 3rd Order Intercept
- Non-Reflective
- CMOS Driver
- SMA Connectors

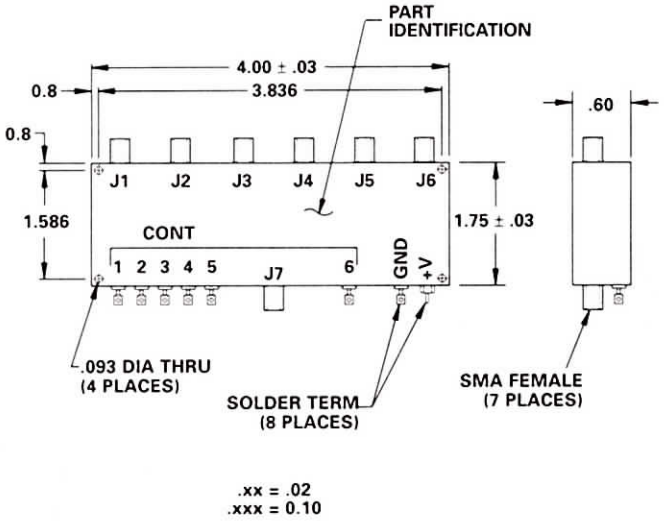

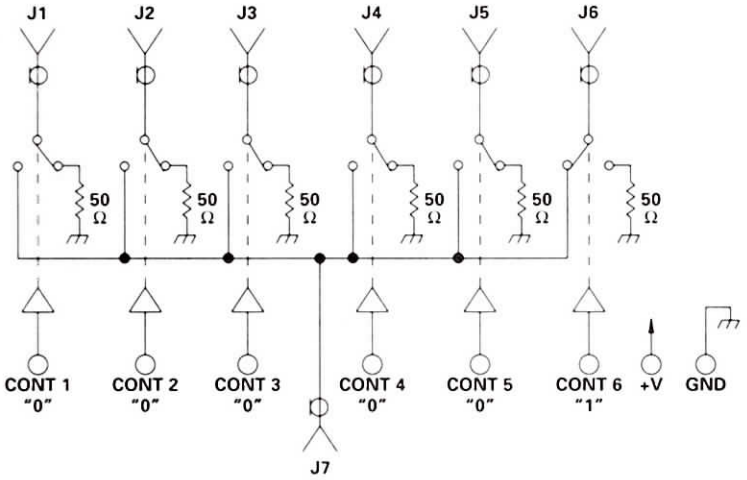

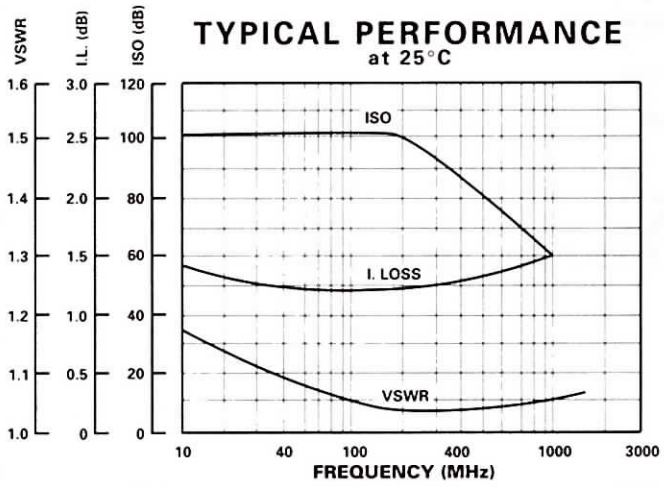

GUARANTEED PERFORMANCE

Parameter		Min	Typ	Max	Units	Conditions
Operating Frequency		15		1000	MHz	
DC Current			20	25	mA	At +10 VDC Supply To +15 VDC Supply
Control Type			CMOS			6 Line Logic "0" = Off Logic "1" = On
Control Current	*High*			±10	µA	VIH = +V
	Low			±10	µA	VIL = +0V
Insertion Loss			1.2	1.5	dB	30 - 300 MHz
			1.5	1.8	dB	15 - 1000 MHz
Isolation		90	95		dB	15 - 200 MHz
		75	85		dB	200 - 400 MHz
		60	70		dB	400 - 700 MHz
		50	60		dB	700 - 1000 MHz
VSWR			1.15/1	1.4/1		
Impedance			50		OHMS	
Switching Speed				50	µSEC	50% Control to 90% / 10% RF
Transition (Rise/Fall) Time			1.5		µSEC	10% / 90% to 90% / 10% RF
Switching (Video) Transients			1		V	Peak Value
Intercept Points	*2nd*		+70		dBm	
	3rd		+40		dBm	
RF Power	*Operate*		+15		dBm	
Operating Temperature		-55	+25	+85	C	TA

MODEL NUMBER 100C0615	SP6T Relay

FEATURES

- DC-450 MHz
- 20 Watts CW
- Non-Reflective
- SMA Connectors

SP6T

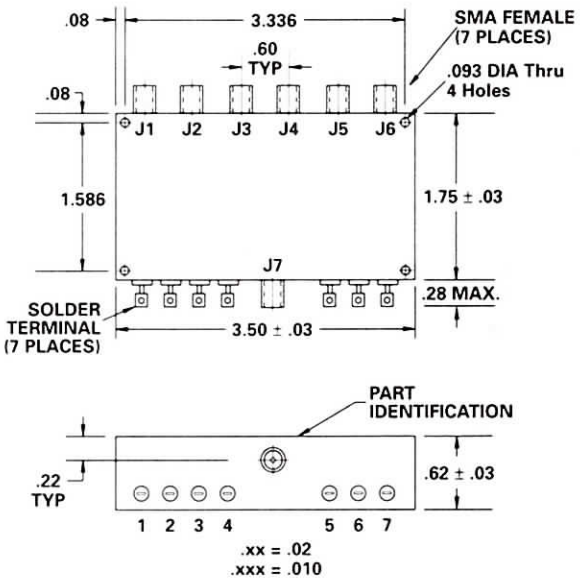

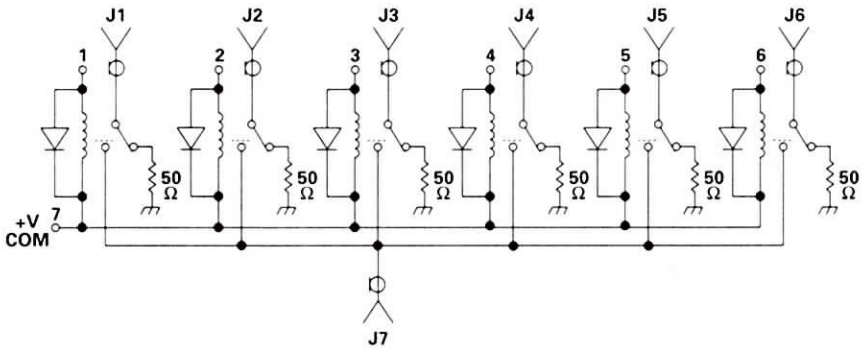

GUARANTEED PERFORMANCE

Parameter	Min	Typ	Max	Units	Conditions
Operating Frequency	DC		450	MHz	
DC Voltage					See Table
Insertion Loss		0.45	0.65	dB	DC - 250 MHz
		0.6	1.0	dB	250 - 450 MHz
Isolation	50	67		dB	DC - 250 MHz
	45	48		dB	250 - 450 MHz
VSWR *Thru*		1.1/1	1.2/1		DC - 250 MHz
		1.3/1	1.4/1		250 - 450 MHz
Impedance		50		OHMS	
Switching Speed			5	mSEC	
RF Power *Operate*			20	W	CW (Thru)
Operating Temperature	-55	+25	+85	°C	TA

TYPICAL PERFORMANCE
at 25°C

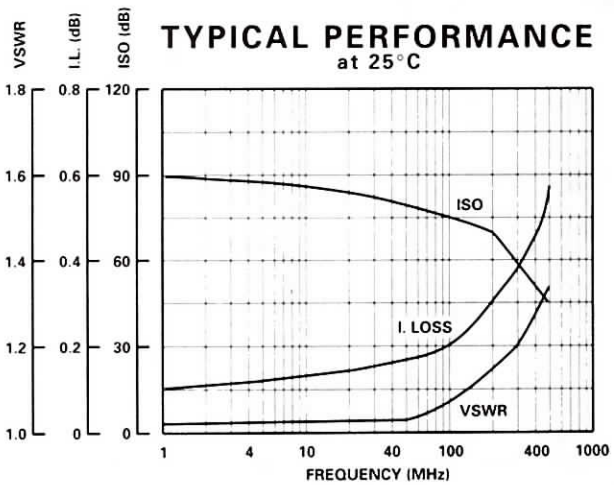

CONTROL VOLTAGE TABLE	
Voltage	Current - Typical
6	65 mA per throw
12	32 mA per throw
18	21 mA per throw
26	17 mA per throw

PART NO. EXAMPLE - SEE TABLE
100C0615 - 26
Basic — Dash No. same

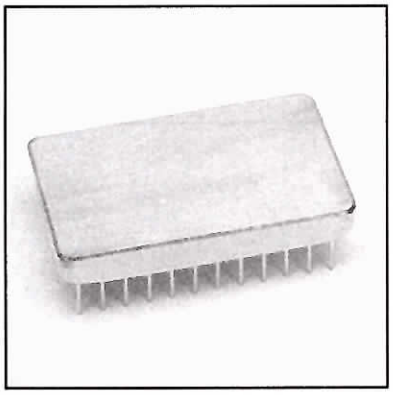

MODEL NUMBER DSW72199

Switch SP7T

FEATURES

- 10 - 2000 MHz
- 40 nSec Switching Speed
- TTL Control
- 24 Pin DIP

SP7T

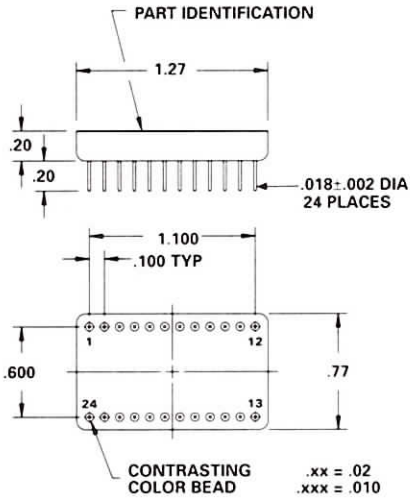

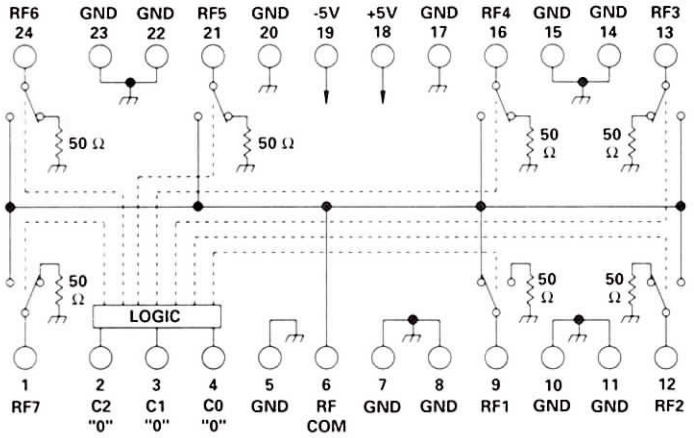

TYPICAL PERFORMANCE
at 25°C

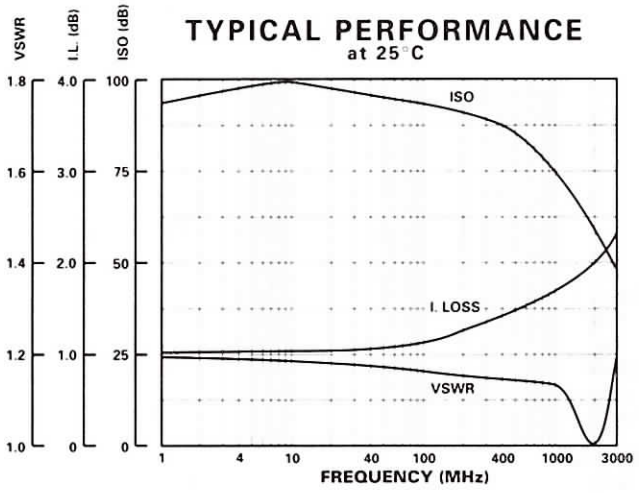

LOGIC TABLE			
C2	C1	C0	THRU
0	0	0	RF COM to RF1
0	0	1	RF COM to RF2
0	1	0	RF COM to RF3
0	1	1	RF COM to RF4
1	0	0	RF COM to RF5
1	0	1	RF COM to RF6
1	1	0	RF COM to RF7
1	1	1	ALL OFF

GUARANTEED PERFORMANCE

Parameter		Min	Typ	Max	Units	Conditions
Operating Frequency		10		2000	MHz	
DC Current			0.027	3	mA	At +5 VDC Supply
			0.037	5	mA	At -5 VDC Supply
Control Type			TTL			3 Line BCD
						See Table
Control Current	*High*		0	2	µA	VIH = +2.7 V
	Low		0	2	µA	VIL = 0.5 V
Insertion Loss			1.6	2.0	dB	10 - 950 MHz
			2.0	2.5	dB	950 - 2000 MHz
Isolation		40	58		dB	
VSWR	*Thru*		1.18/1	1.6/1		
	Termination		1.13/1	2.0/1		
Impedance			50		OHMS	
Switching Speed			40	75	nSEC	50% TTL to 90% / 10% RF
Transition (Rise/Fall) Time			4		nSEC	10% / 90% or 90% / 10% RF
Switching (Video) Transients			39		mV	Peak Value
Intercept Points	*2nd*		+75		dBm	
	3rd		+38		dBm	
RF Power	*Operate*		+14.6	+12	dBm	0.1 dB Compression
	No Damage		+20	+18	dBm	1 dB Compression
Operating Temperature		-55	+25	+125	°C	TA

MODEL NUMBER DSW79177	Switch SP7T

FEATURES

- 800 - 2050 MHz
- 3 Line BCD Control
- 40 NSec Switching Speed
- Small Size
- +75 dBm IP2
- Non-Reflective

SP7T

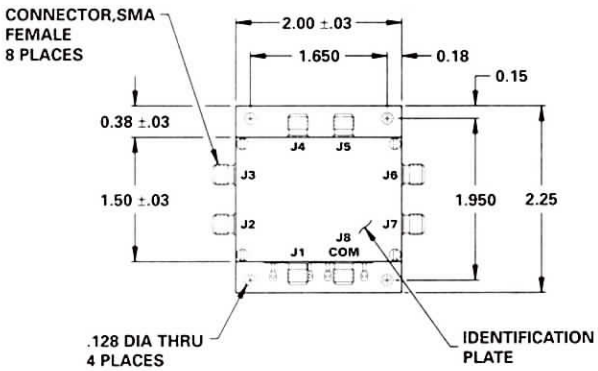

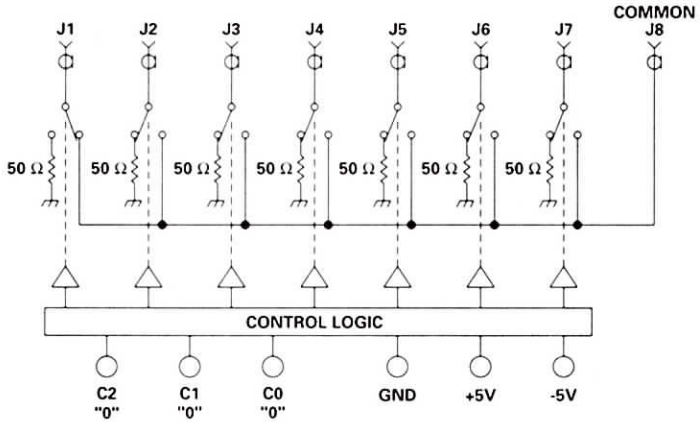

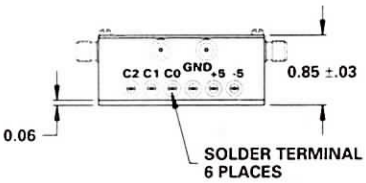

.xx = .02
.xxx = .010

LOGIC TABLE

C2	C1	C0	THRU
0	0	0	J8 to J1
0	0	1	J8 to J2
0	1	0	J8 to J3
0	1	1	J8 to J4
1	0	0	J8 to J5
1	0	1	J8 to J6
1	1	0	J8 to J7
1	1	1	All Off

TYPICAL PERFORMANCE
at 25°C

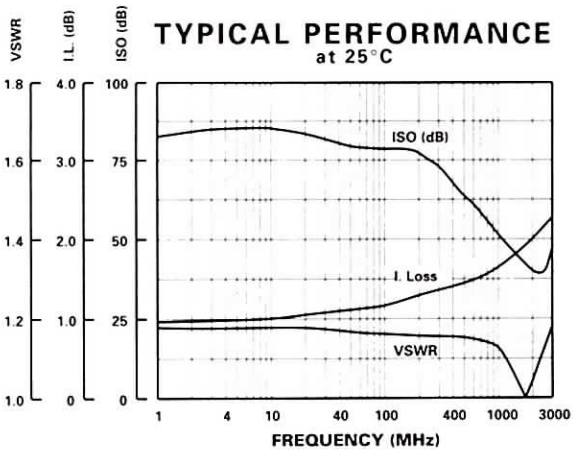

GUARANTEED PERFORMANCE

Parameter		Min	Typ	Max	Units	Conditions
Operating Frequency		800		2050	MHz	
DC Current			0.027	3	mA	At +5 VDC Supply
			0.037	5	mA	At -5 VDC Supply
Control Type			TTL			3 Line BCD See Table
Control Current	*High*		0	2	µA	VIH = +2.7V
	Low		0	2	µA	VIL = +0.5V
Isolation		40	44		dB	
Insertion Loss			1.6	2.0	dB	800 - 950 MHz
			2.0	2.5	dB	1750 - 2050 MHz
VSWR	*Thru*		1.18/1	1.6/1		
	Termination		1.13/1	2.0/1		
Impedance			50		OHMS	
Switching Speed			40	75	nSec	50% TTL to 90% / 10% RF
Transition (Rise/Fall) Time			4		nSec	10% / 90% or 90% / 10% RF
Switching (Video) Transients			39		mV	Peak Value
Intercept Points	*2nd*		+75		dBm	
	3rd		+38		dBm	
RF Power	*Operate*		+14.6	+12	dBm	0.1 dB Compression
			+20	+18	dBm	1 dB Compression
Operating Temperature		0	+25	+71	°C	TA

MODEL NUMBER DSW89048

PIN Diode SP8T

FEATURES

- 200 - 2000 MHz
- 70 dB Isolation @ 1000 MHz
- 1.7 dB Insertion Loss @ 1000 MHz
- TTL Driver
- Non-Reflective
- SMA Connectors

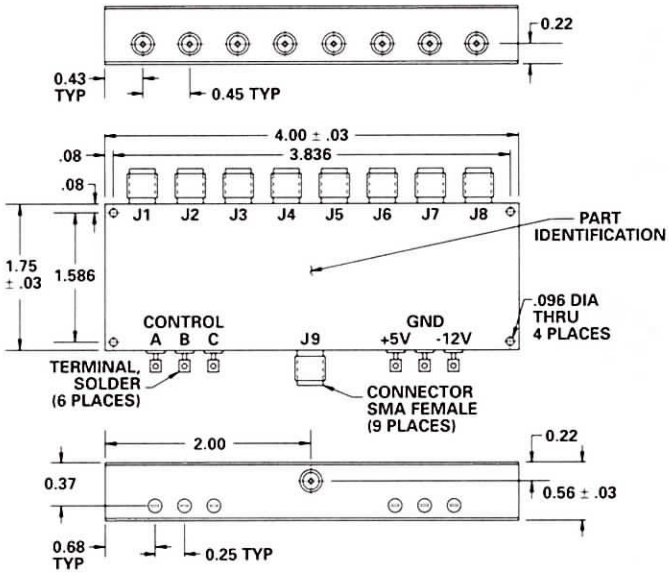

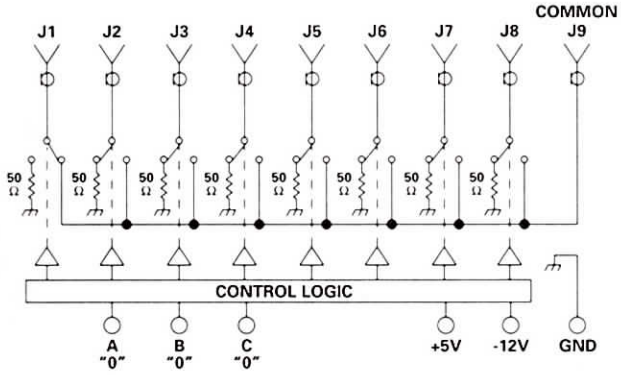

TYPICAL PERFORMANCE

at 25°C

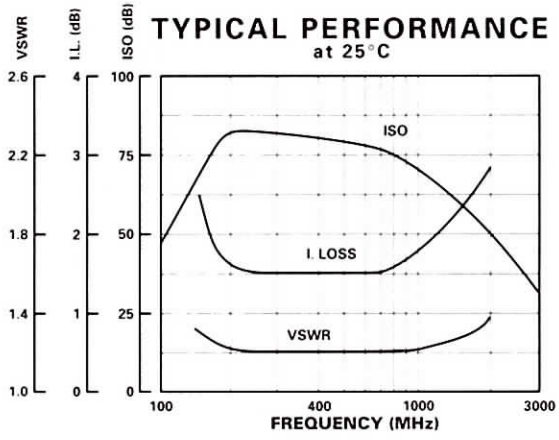

CONTROL LOGIC A	B	C	RF CONNECTION RF COMMON J9 TO
0	0	0	J1
0	0	1	J2
0	1	0	J3
0	1	1	J4
1	0	0	J5
1	0	1	J6
1	1	0	J7
1	1	1	J8

GUARANTEED PERFORMANCE

Parameter		Min	Typ	Max	Units	Conditions
Operating Frequency		200		2000	MHz	
DC Current			51	70	mA	At +5 VDC Supply
			49	60	mA	To -12 VDC Supply
Control Type			TTL			3 Line BCD
Control Current	*High*			±10	µA	VIH = +2.7 V
	Low			±10	µA	VIL = +0.5 V
Insertion Loss			1.7	2.5	dB	500 - 1000 MHz
			2.5	3.5	dB	1000 - 2000 MHz
Isolation		60	70		dB	500 - 1000 MHz
		45	49		dB	1000 - 2000 MHz
VSWR	*Thru*		1.37/1	1.6/1		
Impedance			50		OHMS	
Switching Speed			255	300	nSEC	50% TTL to 90% / 10% RF
Transition (Rise/Fall) Time			188		nSEC	10% / 90% or 90% / 10% RF
Switching (Video) Transients			139		mV	Peak Value
Intercept Points	*2nd*		+51		dBm	
	3rd		+37		dBm	
RF Power	*Operate*		+26	+23	dBm	0.1 dB Compression
Operating Temperature		-55	+25	+85	°C	TA

MODEL NUMBER 100C1159

SP8T Relay

FEATURES

- DC - 200 MHz
- 50Ω Terminations
- 25 Watt CW
- SMA Connectors

SP8T

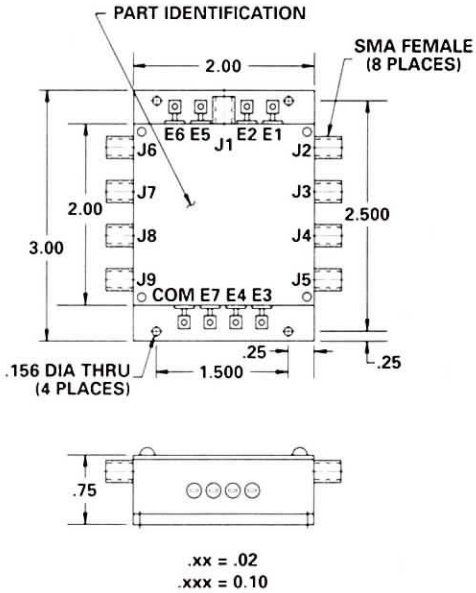

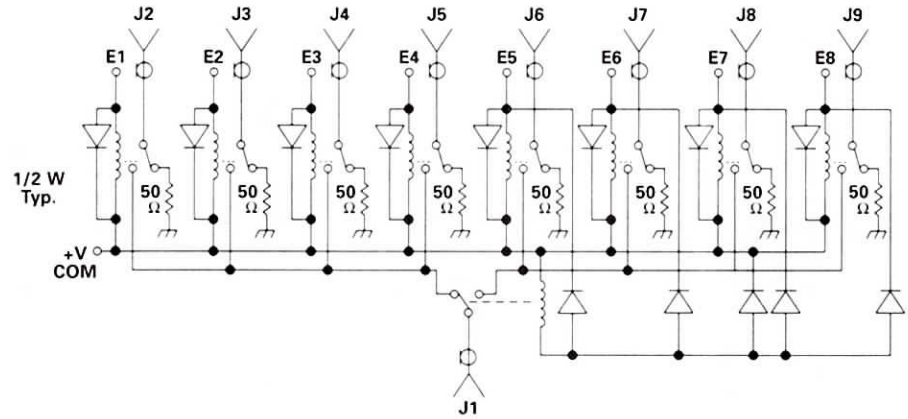

GUARANTEED PERFORMANCE

Parameter		Min	Typ	Max	Units	Conditions
Operating Frequency		DC		200	MHz	
DC Voltage						See Table
Insertion Loss			0.4	0.5	dB	
Isolation		50	55		dB	
VSWR	*Thru*		1.2/1	1.25/1		
Impedance			50		OHMS	
Switching Speed				5	mSec	
RF Power	*Operate*			25	W	CW (Thru)
Operating Temperature		-55	+25	+85	°C	TA

TYPICAL PERFORMANCE

at 25°C

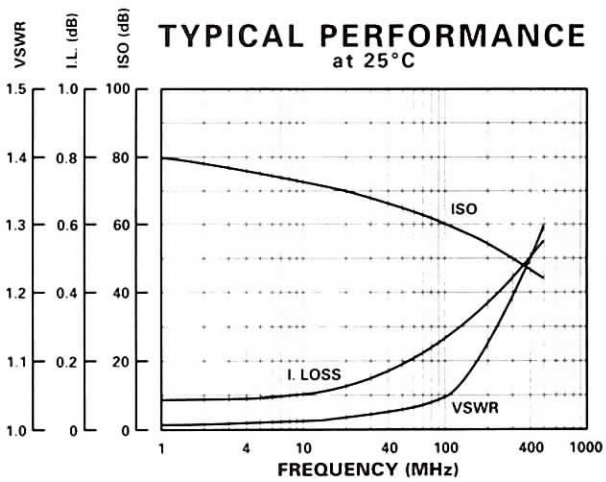

CONTROL VOLTAGE TABLE	
Voltage	Part No.
6	100C1159 - 6
12	100C1159 - 12
18	100C1159 - 18
26	100C1159 - 26

PART NO. EXAMPLE - SEE TABLE

100C1159 - 26

Basic Part Number — -26 for +26V Operation

MODEL NUMBER DSW96213

Switch SP9T

FEATURES

- 150 - 2000 MHz
- High Isolation, 76 dB typ
- Low Insertion Loss, 1.4 dB typ
- Non-Reflective
- SMA Connectors

SP9T

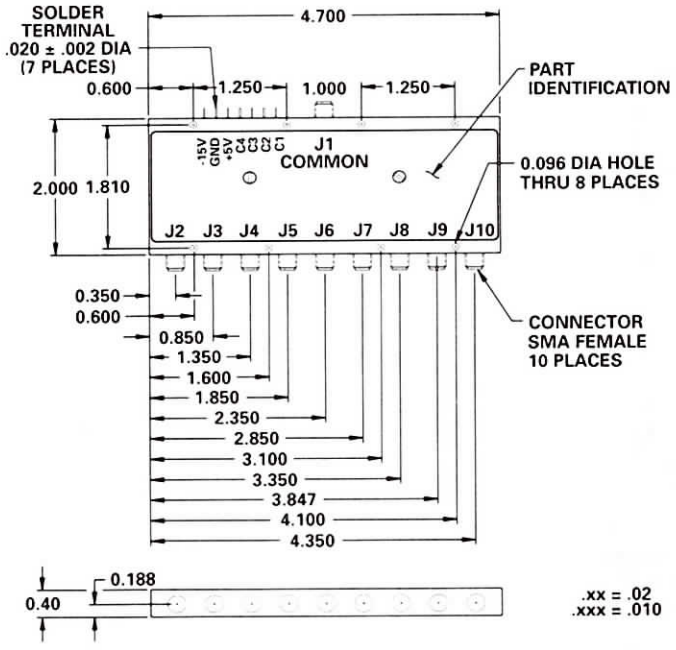

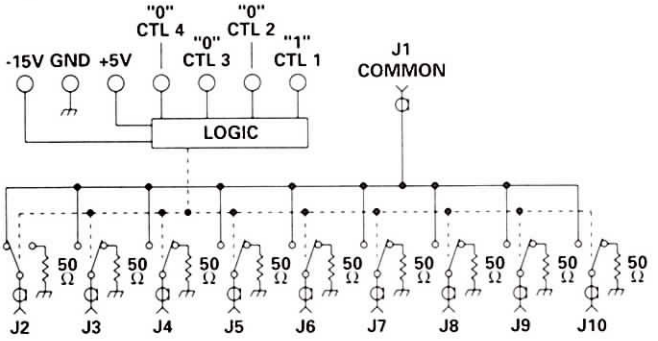

LOGIC TABLE				
CTL 4	CTL 3	CTL 2	CTL 1	J1 COMMON TO
0	0	0	1	J2
0	0	1	0	J3
0	0	1	1	J4
0	1	0	0	J5
0	1	0	1	J6
0	1	1	0	J7
0	1	1	1	J8
1	0	0	0	J9
1	0	0	1	J10
ALL OTHERS				INVALID

TYPICAL PERFORMANCE
at 25°C

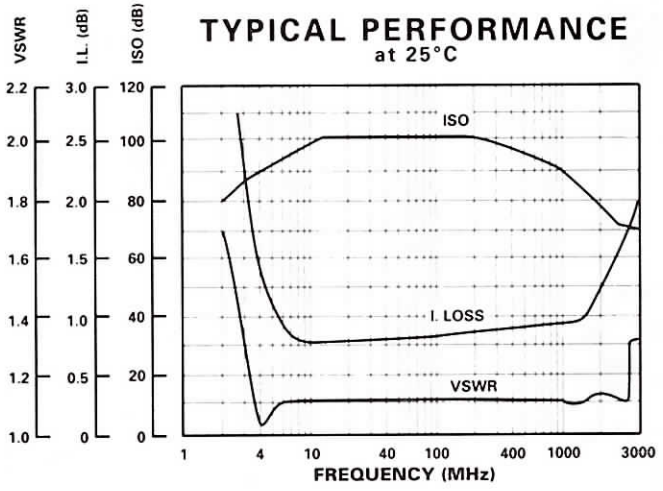

GUARANTEED PERFORMANCE

Parameter		Min	Typ	Max	Units	Conditions
Operating Frequency		150		2000	MHz	
DC Current			50	75	mA	At +5 VDC Supply
			44	60	mA	At -15 VDC Supply
Control Type			TTL			See Logic Chart
Control Current	*High*		±1	±100	µA	VIH = +2.7 V
	Low		±1	±100	µA	VIL = +0.5 V
Isolation		60	76		dB	
Insertion Loss			1.2	1.5	dB	150 - 1000 MHz
			1.4	2.0	dB	1000 - 1500 MHz
			1.65	2.5	dB	1500 - 2000 MHz
VSWR	*Thur*		1.2/1	1.5/1		
	Termnation		1.1/1	1.5/1		
Impedance			50		OHMS	
Switching Speed			0.63	5.0	µSEC	50% TTL to 90% / 10% RF
Transition (Rise/Fall) Time			250		nSEC	10% / 90% or 90% / 10% RF
Switching (Video) Transients			1.3		V	Peak Value
Intercept Points	*2nd*	+77			dBm	
	3rd	+42			dBm	
RF Power	*Operate*		+25	+20	dBm	0.1 dB Compression
	No Damage			+30	dBm	At All Switch Positions Only
Operating Temperature		-28	+25	+90	°C	TA

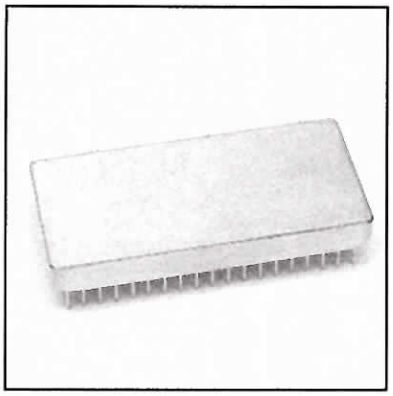

MODEL NUMBER DS0820

PIN Diode SP10T

FEATURES

- 10 - 1500 MHz
- 15 mA, +5 VDC
- TTL Driver
- Non-Reflective

SP10T

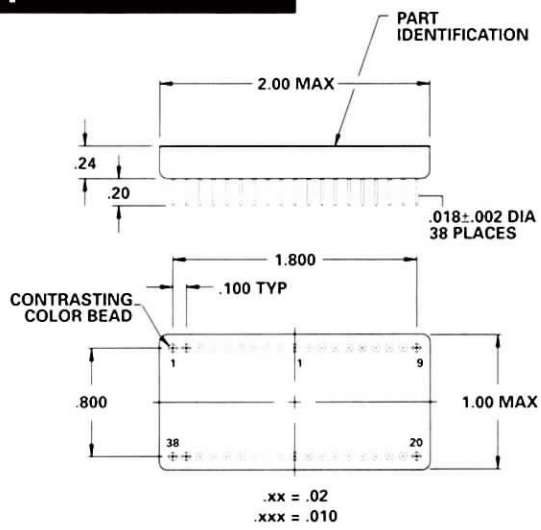

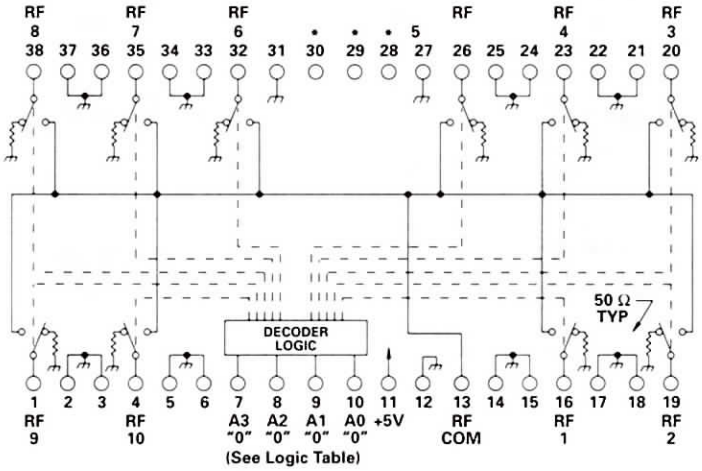

• = No Internal Connection (3 Places)
Ground PINS = 2, 3, 5, 6, 12, 14, 15, 17, 18, 21, 22, 24, 25, 27, 31, 33, 34, 36, 37

LOGIC TABLE

7	8	9	10	PIN
A3	A2	A1	A0	FUNCTION
0	0	0	0	RF1 to RF COM
0	0	0	1	RF2
0	0	1	0	RF3
0	0	1	1	RF4
0	1	0	0	RF5
0	1	0	1	RF6
0	1	1	0	RF7
0	1	1	1	RF8
1	0	0	0	RF9
1	0	0	1	RF10 to RF COM
1	0	1	0	I NVALID
1	↑	↑	↑	
1	1	1	1	

GUARANTEED PERFORMANCE

Parameter		Min	Typ	Max	Units	Conditions
Operating Frequency		10		1500	MHz	
DC Current			15	35	mA	At +5 VDC Supply
Control Type			TTL			4 Line, See Logic Table
Control Current	*High*		0		µA	VIH = +2.7 V
	Low		0		µA	VIL = +0.5 V
Insertion Loss			0.95	1.5	dB	10 - 500 MHz
			1.6	2.0	dB	500 - 1500 MHz
Isolation		40	46		dB	10 - 1000 MHz
		35	42		dB	1000 - 1500 MHz
VSWR	*Thru*		1.3/1	1.5/1		10 - 1500 MHz
	Termination		1.1/1	1.5/1		10 - 500 MHz
			1.4/1	2.0/1		500 - 1500 MHz
Impedance			50		OHMS	
Switching Speed			3.0	5.0	µSEC	
Transition (Rise/Fall) Time			1.0		µSEC	90% / 10% or 10% / 90% RF
Switching (Video) Transients			640		mV	Peak Value
Intercept Points	*2nd*		+64		dBm	70 MHz / 50 MHz
	3rd		+35		dBm	35 MHz / 50 MHz
RF Power	*Operate*		+11	+5	dBm	10 - 50 MHz 0.1 dB Comp.
			+18	+13	dBm	50 - 1500 MHz 0.1 dB Comp.
	No Damage			+27	dBm	
Operating Temperature		-55	+25	+125	C	TA

TYPICAL PERFORMANCE
at 25°C

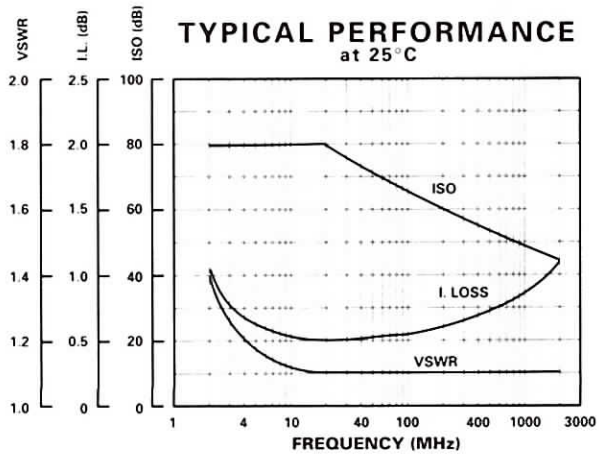

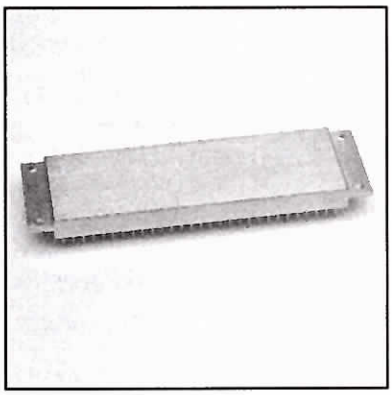

MODEL NUMBER DS0918

GaAs SP16T

FEATURES

- DC-4000 MHz
- 4 line BCD TTL Control
- Non-Reflective
- 58 Pin DIP

SP16T

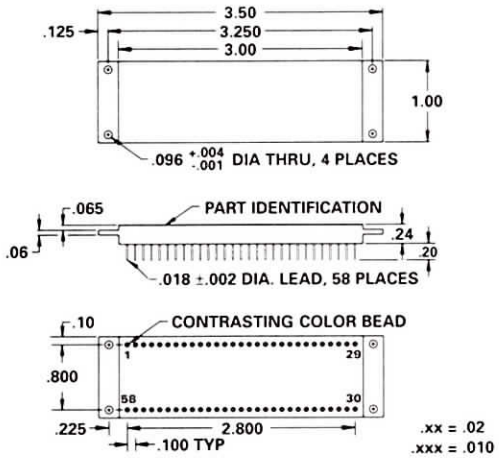

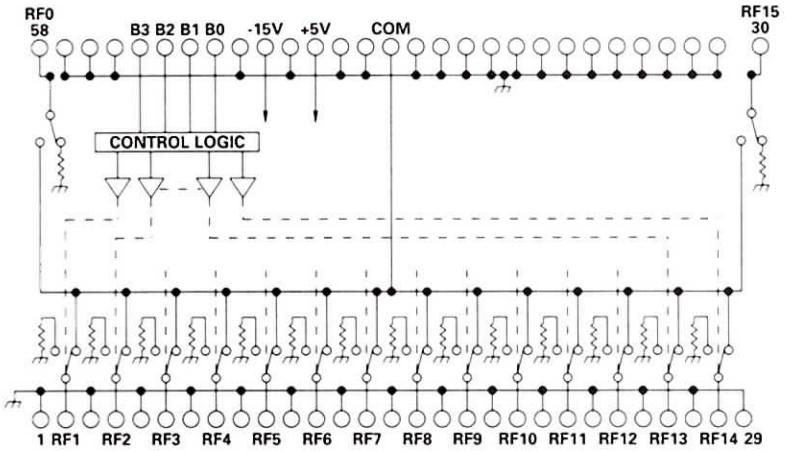

CONTROL TABLE				
CTL				COM C TO:
B3	B2	B1	B0	RF
0	0	0	0	RF0
0	0	0	1	RF1
0	0	1	0	RF2
0	0	1	1	RF3
0	1	0	0	RF4
0	1	0	1	RF5
0	1	1	0	RF6
0	1	1	1	RF7
1	0	0	0	RF8
1	0	0	1	RF9
1	0	1	0	RF10
1	0	1	1	RF11
1	1	0	0	RF12
1	1	0	1	RF13
1	1	1	0	RF14
1	1	1	1	RF15

TYPICAL PERFORMANCE

at 25°C

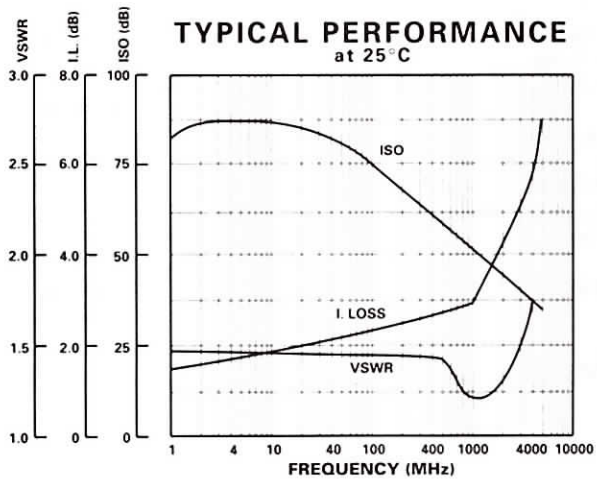

GUARANTEED PERFORMANCE

Parameter		Min	Typ	Max	Units	Conditions
Operating Frequency		DC		4	GHz	
DC Current			3	10	mA	At +5 VDC Supply
			11	25	mA	At -15 VDC Supply
Control Type			TTL			4 Line BCD Control
Control Current	*High*		0	±40	µA	VIH = +2.7 V
	Low		0	±40	µA	VIL = +0.5 V
Insertion Loss			3.1	4	dB	DC - 1 GHz
			3.8	5	dB	1 - 2 GHz
			5.6	7	dB	2 - 4 GHz
Isolation		40	48		dB	DC - 1 GHz
		30	39		dB	1 - 2 GHz
		20	32		dB	2 - 4 GHz
VSWR			1.8/1	2/1		
Impedance			50		OHMS	
Switching Speed			170	300	nSEC	50% TTL to 90% / 10% RF
Transition (Rise/Fall) Time			4		nSEC	90% / 10% or 10% / 90% RF
Switching (Video) Transients			44		mV	
Intercept Points	*2nd*		+49		dBm	70 MHz / 50 MHz
	3rd		+36		dBm	35 MHz / 50 MHz
RF Power	*Operate*		+13	+10	dBm	0.1 dB Compression 20 MHz
	No Damage			+23	dBm	
Operating Temperature		-55	+25	+85	°C	TA

DAICO *Industries*

310.507.3242 • FAX 310.507.5701 • www.daico.com

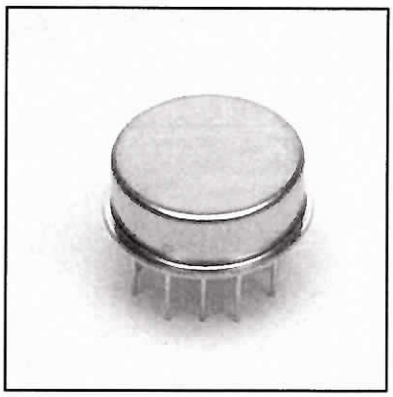

MODEL NUMBER DS0519

PIN Diode DP2T

FEATURES

- 20-700 MHz
- 0.5 dB Insertion Loss
- TTL Driver
- Small TO-8 Package
- Low Cost
- Cascadable Building Block For Attenuators And Phase Shifters

DP2T

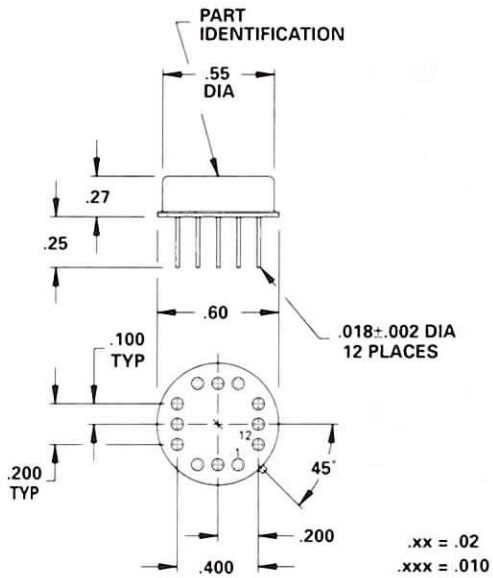

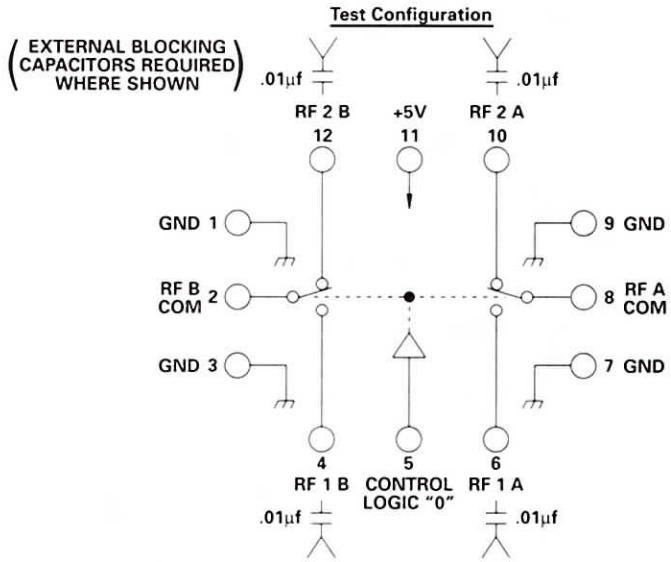

TYPICAL PERFORMANCE

at 25°C

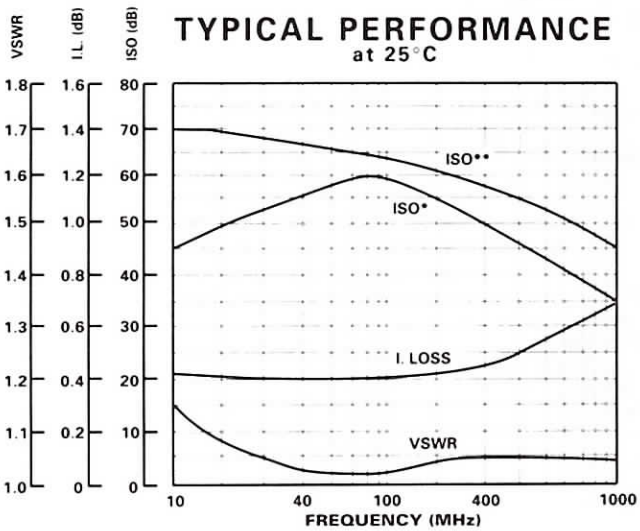

* = One Section
** = Between Sections

GUARANTEED PERFORMANCE

Parameter		Min	Typ	Max	Units	Conditions
Operating Frequency		20		700	MHz	
DC Current			6.8	10	mA	At +5 VDC Supply
Control Type			TTL			1 Line Logic "0" = RF COM to RF2 Logic "1" = RF COM to RF1
Control Current	*High*			20	µA	VIH = +2.7 V
	Low			-400	µA	VIL = +0.5 V
Insertion Loss			0.6	0.75	dB	20 - 700 MHz
Isolation		35	42		dB	
VSWR	*Thru*		1.2/1	1.35/1		20 - 200 MHz
			1.1/1	1.20/1		200 - 700 MHz
Impedance			50		OHMS	
Switching Speed			2.4	3.0	µSEC	50% TTL to 90% / 10% RF
Transition (Rise/Fall) Time			300		nSEC	90% / 10% or 10% / 90% RF
Switching (Video) Transients			230	500	mV	Peak Value
Intercept Points	*2nd*		+70		dBm	350 MHz / 118 MHz
	3rd		+47		dBm	350 MHz / 232 MHz
RF Power	*Operate*		+12	+10	dBm	0.1 dB Comp 20 - 200 MHz
			+23	+20	dBm	0.1 dB Comp 200 - 700 MHz
	No Damage			+30	dBm	
Operating Temperature		-55	+25	+125	°C	TA

MODEL NUMBER DSW22206	Switch DP2T

FEATURES

- 3-200 MHz
- 1 dB Insertion Loss
- 45 dB Isolation
- Small DIP Package

DP2T

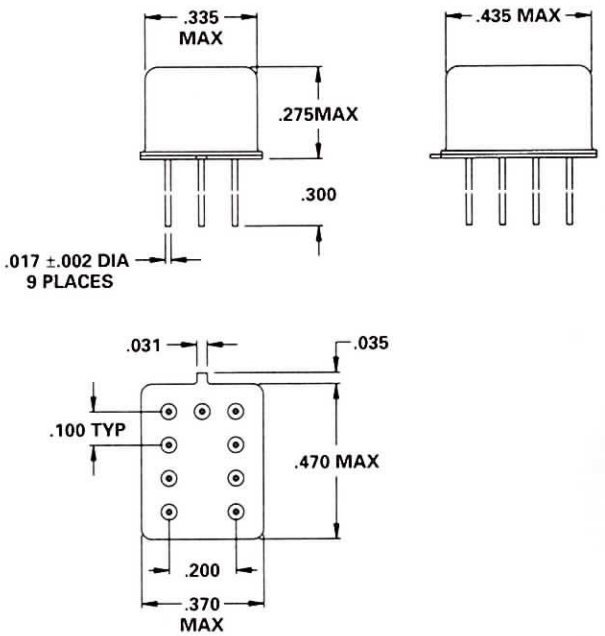

.xx = .02
.xxx = .010

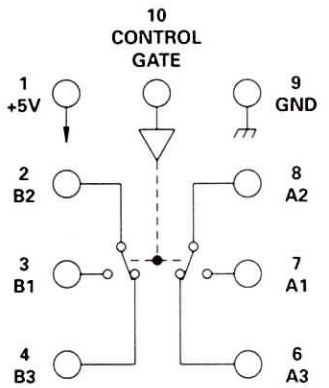

TYPICAL PERFORMANCE
at 25°C

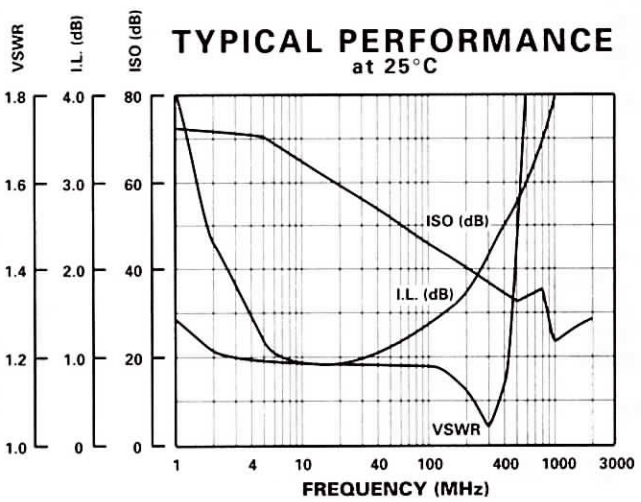

GUARANTEED PERFORMANCE

Parameter	Min	Typ	Max	Units	Conditions
Operating Frequency	3		200	MHz	Test Frequencies At 17 MHz and 58 MHz
DC Current		0.261	132	mA	At +5 VDC Supply
Control Current		±1.0	50	µA	VIH = 2.0 Min
		±1.0	-400	µA	VIH = 0.8 Min
Insertion Loss		1.06	1.40	dB	10 to 110 MHz
Isolation	43	45		dB	10 to 110 MHz
	38	40		dB	110 to 200 MHz
VSWR		1.31/1	1.5/1		3 to 10 MHz
		1.19/1	1.2/1		10 to 200 MHz
Impedance		50		OHMS	
Switching Speed		0.34	1	µSec	
Switching (Video) Transients		40	50	mV	Peak Value
Intercept Points *3rd*	+34	+33		dBm	48 - 70 MHz
	+28	+39		dBm	15 - 20 MHz
RF Power *Operate*		+9.8	+13	dBm	
Operating Temperature	-55	+25	+85	°C	

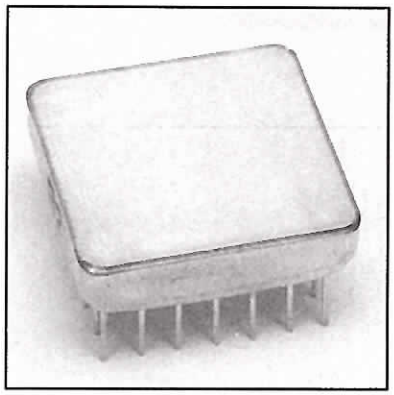

MODEL NUMBER DSWT2180

Transfer Switch

FEATURES

- 5 - 1000 MHz
- 70 dB Isolation
- Small .75 Sq. Package

XFER

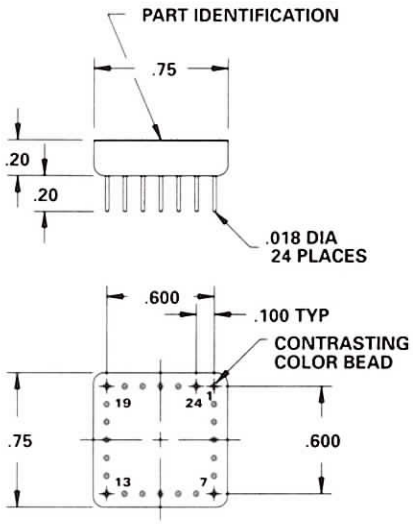

.xx = .02
.xxx = .010

LOGIC TABLE	
CTL	FUNCTION
"0"	RF1 - RF4
	RF2 - RF3
"1"	RF1 - RF2
	RF3 - RF4

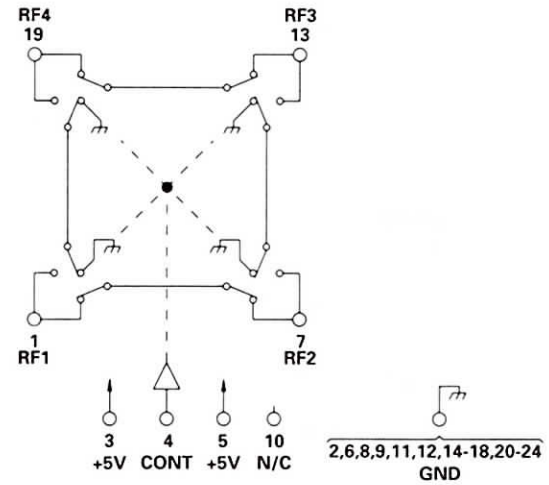

N/C = NO INTERNAL CONNECTION

TYPICAL PERFORMANCE
at 25°C

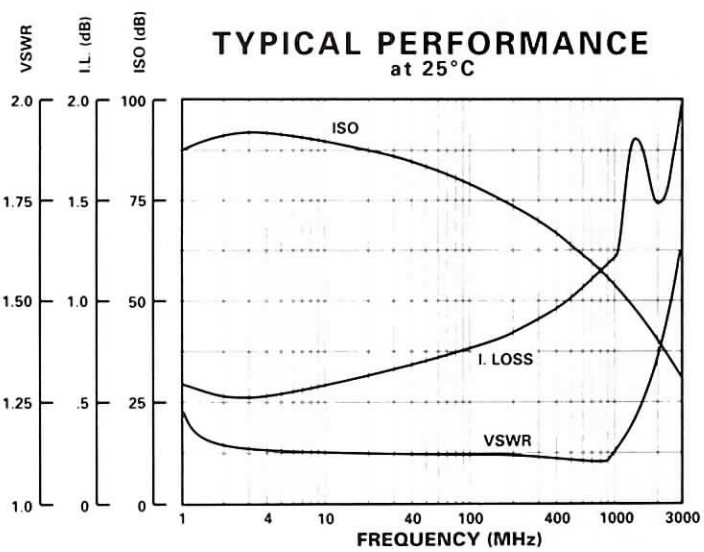

GUARANTEED PERFORMANCE

Parameter		Min	Typ	Max	Units	Conditions
Operating Frequency		5		1000	MHz	
DC Current			0.35	20	mA	At +5 VDC Supply
Control Type			TTL			See Logic Table
Control Current	*High*		0		µA	VIH = +2.7 V
	Low		0		µA	VIL = +0.5 V
Isolation		70	80		dB	5 - 100 MHz
		55	62		dB	100 - 550 MHz
		40	54		dB	550 - 1000 MHz
Insertion Loss			1.0	1.3	dB	5 - 550 MHz
			1.25	1.7	dB	550 - 1000 MHz
VSWR	*Thru*		1.09/1	1.3/1		
Impedance			50		OHMS	
Switching Speed			0.05	6.0	µSEC	50% TTL to 90% / 10% RF
Transition (Rise/Fall) Time			4		nSEC	90% / 10% or 10% / 90% RF
Switching (Video) Tranients			50		mV	Peak Value
Intercept Points	*2nd*		+61		dBm	MHz
	3rd	+30	+43		dBm	MHz
RF Power	*Operate*		+17	+5	dBm	(0.1 dB Compression)
	No Damage		+20		dBm	
Operating Temperature		-54	+25	+125	°C	TA

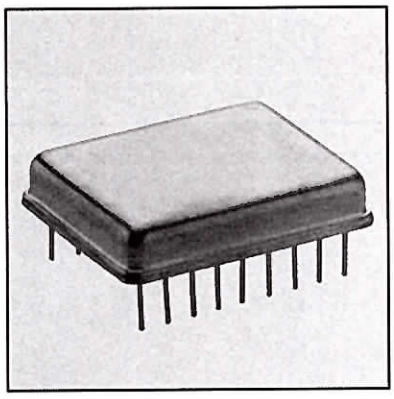

MODEL NUMBER DS0319

PIN Diode Transfer Switch

FEATURES

- 70 - 1000 MHz
- CMOS Driver
- 60 dB Isolation
- 1.3 dB Insertion Loss
- Low Transients
- 18 Pin DIP

XFER

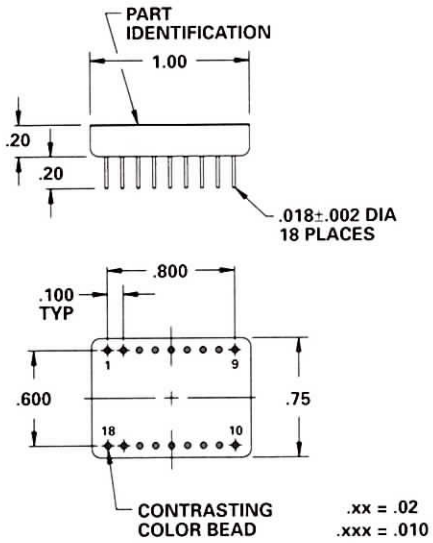

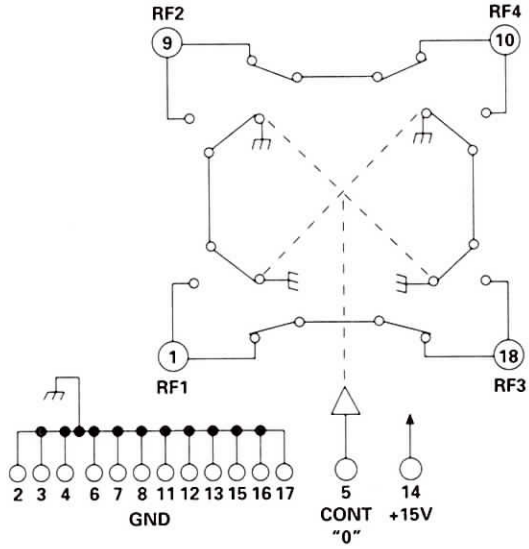

LOGIC TABLE	
"0"	RF1 TO RF3
	RF2 TO RF4
"1"	RF1 TO RF2
	RF3 TO RF4

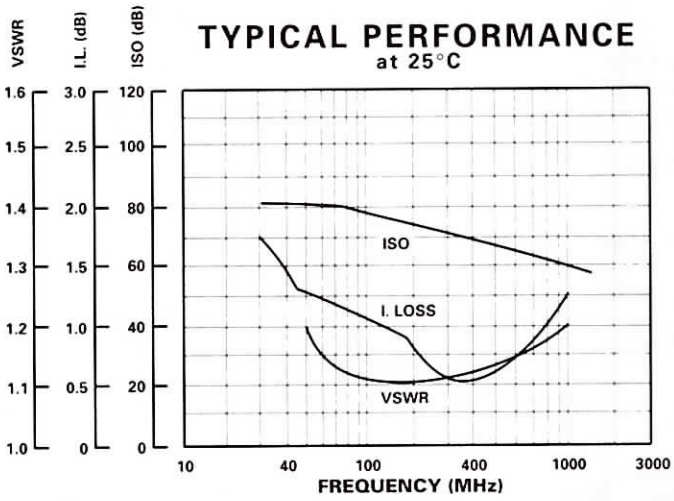

GUARANTEED PERFORMANCE

Parameter		Min	Typ	Max	Units	Conditions
Operating Frequency		70		1000	MHz	
DC Current			15		mA	At +15 VDC Supply
Control Type			CMOS			1 Line, See Logic Table
Control Current	*High*			±3	µA	VIH = +V
	Low			±3	µA	VIL = Ground
Insertion Loss			1.2	1.5	dB	
Amplitude Flatness				±0.5	dB	
Isolation		40	60		dB	
VSWR	*Thru*		1.2/1	1.3/1		
Impedance			50		OHMS	
Switching Speed				10	µSEC	50% Control to 90% / 10% RF
Transition (Rise/Fall) Time			0.5		µSEC	90% / 10% or 10% / 90% RF
Switching Transients (Video)				100	mV	Peak Value
RF Power	*Operate*			+10	dBm	
	No Damage			+30	dBm	
Operating Temperature		-55	+25	+105	°C	TA

MODEL NUMBER 100C1297	PIN Diode Transfer Switch

FEATURES

- 15 - 1000 MHz
- +36 dBm 3rd Order I.P.
- CMOS Driver
- Non-Reflective
- SMA Connectors

XFER

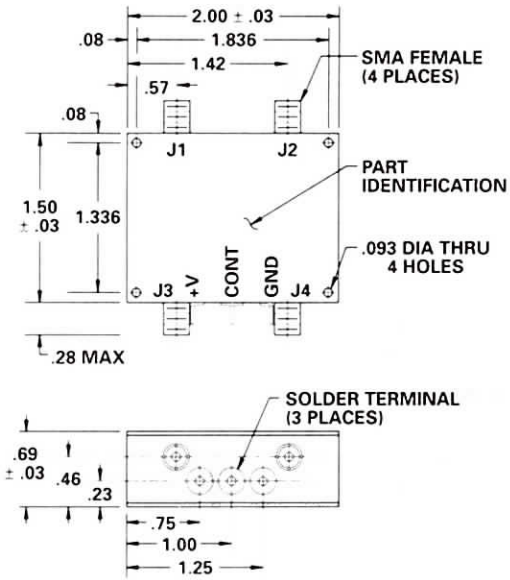

.xx = .02
.xxx = .010

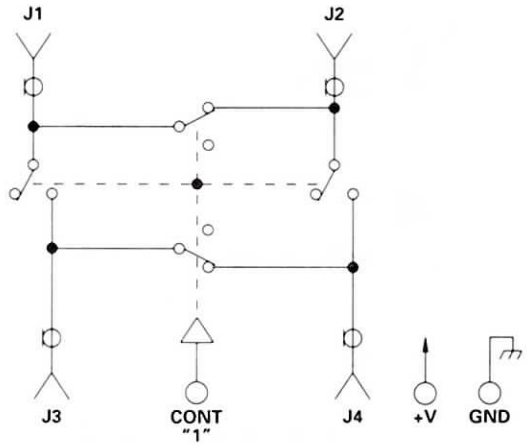

TYPICAL PERFORMANCE
at 25°C

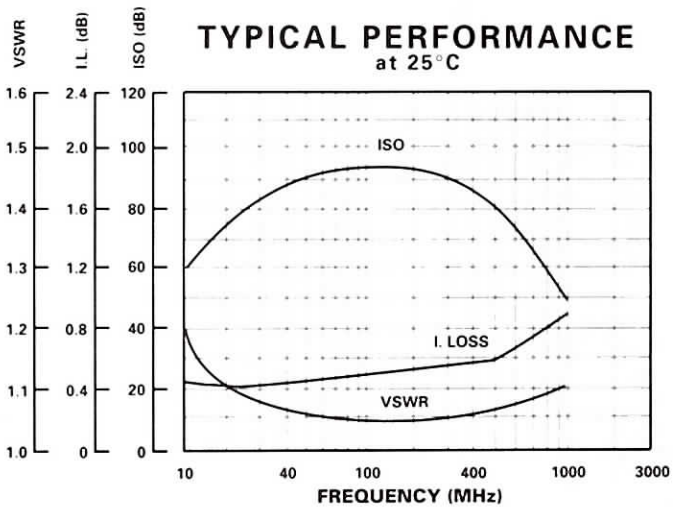

GUARANTEED PERFORMANCE

Parameter		Min	Typ	Max	Units	Conditions
Operating Frequency		15		1000	MHz	
DC Current			20		mA	At +10 VDC Supply
						To +15 VDC Supply
Control Type			CMOS			1 Line
						Logic "0" = J1 to J3, J2 to J4
						Logic "1" = J1 to J2, J3 to J4
Control Current	*High*			±10	µA	VIH = +V
	Low			±10	µA	VIL = +0V
Insertion Loss			0.5	0.7	dB	15 - 500 MHz
			0.9	1.2	dB	500 - 1000 MHz
Isolation		50	70		dB	15 - 100 MHz
		40	60		dB	100 - 800 MHz
		35	50		dB	800 - 1000 MHz
VSWR			1.1/1	1.25/1		15 - 800 MHz
			1.15/1	1.5/1		800 - 1000 MHz
Impedance			50		OHMS	
Switching Speed				20	µSEC	50% Control to 90% / 10% RF
Intercept Points	*3rd*		+36		dBm	35 MHz / 50 MHz
RF Power	*Operate*			+15	dBm	0.1 dB Comp. Above 70 MHz
Operating Temperature		-55	+25	+85	C	TA

MODEL NUMBER 100C0347

Transfer Switch

FEATURES

- DC-400 MHz
- 0.4 dB Insertion Loss
- 20 Watt CW
- BNC, TNC or SMA Connectors

XFER

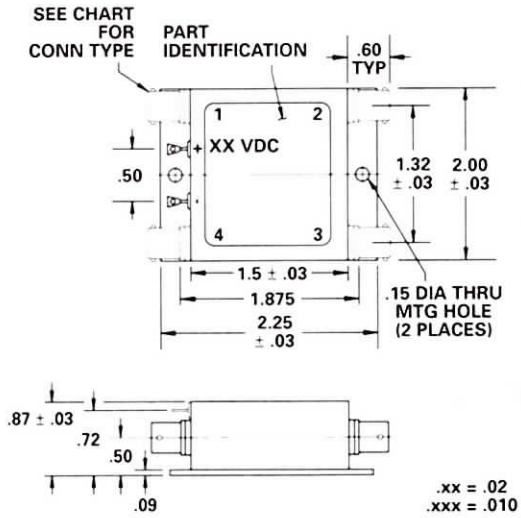

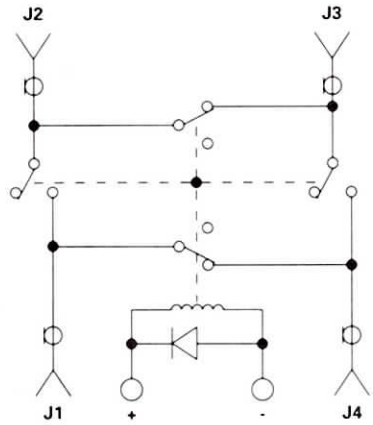

TYPICAL PERFORMANCE

at 25°C

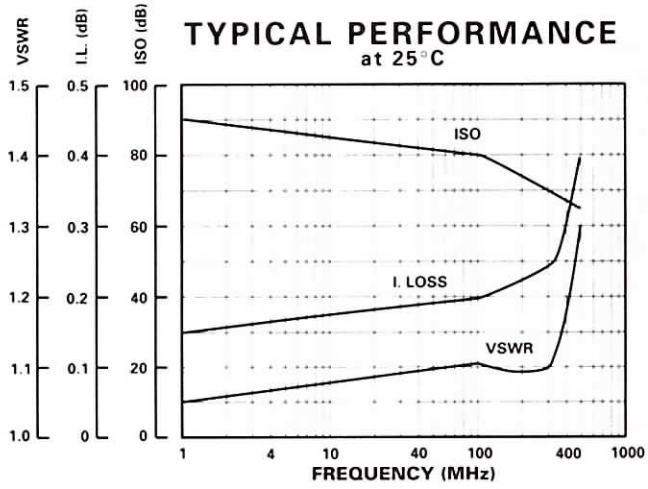

GUARANTEED PERFORMANCE

Parameter		Min	Typ	Max	Units	Conditions
Operating Frequency		DC		400	MHz	
DC Voltage						See Table
Insertion Loss			0.3	0.5	dB	
Isolation		55	62		dB	
VSWR	*Thru*		1.2/1	1.4/1		
Impedance			50		OHMS	
Switching Speed				3	mSEC	
RF Power	*Operate*			20	W	CW
Operating Temperature		-55	+25	+85	°C	TA

CONNECTOR TYPE
- BNC
- SMA
- TNC

CONTROL VOLTAGE TABLE	
Voltage	Current - Typical
6	240 mA per throw
12	125 mA per throw
18	85 mA per throw
26	70 mA per throw

PART NO. EXAMPLE - SEE TABLE

100C0347 - BNC - 12

Basic Part Number — Connector Type — Coil Voltage

Attenuators

- Fixed and Digital
- GaAs, PIN Diode, & Schottky Diode
- RF Relay
- Thin Film MIC Technology
- Solid State Connectorized
- 1 Bit Through 8 Bit Attenuators with 0.1 dB LSB's Through 127 dB Range
- Full Military Screening Available (See Page 281)

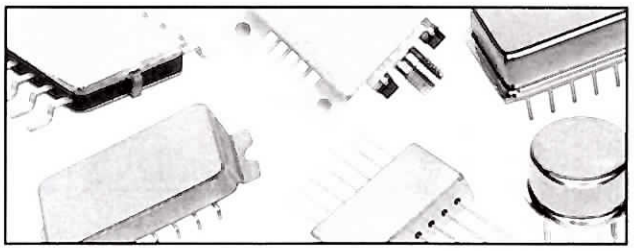

For additional products and information, please visit us at www.daico.com

Digital Attenuators Specification Table

	Number of Sect.	Available LSB/Range dB	Spec Freq MHz	Part Number	Switching Speed µSec/Max	Insertion Loss dB Max/Typ	RF Power dBm	VSWR MAX	DC Power Volts	DC Power mA	Control	Package	Page
	Fixed	See Dwg	DC-3000	DA0960	-	-	+30	1.2	-	-	TTL	3 Pin TO-5	181
GaAs	1	10/10	5-1000	DA0944-10	0.05	-	+10	1.35	+5	1	TTL	8 Pin Flatpack	184
GaAs	1	10/10	10-1000	DA0923-10	0.1	1.8/1.0	+24	1.3	+5	1	TTL	12 Pin TO-8	see website
GaAs	1	See Dwg	20-700	DA0816-X	0.035	1.5/1	+10	1.25	+5	1	TTL	12 Pin TO-8	182
GaAs	1	See Dwg	20-700	DAT15015-X	0.035	1.5/1	+10	1.25	+5	1	TTL	12 Pin SMP	185
GaAs	1	20	200-600	DAT15073	0.05	1.5/1	+10	1.25	+5	1	CMOS	12 Pin SMP	186
	1	50/50	800-1200	DA0879	1	-	+20	1.25	+12	20	TTL	8 Pin Flatpack	183
	2	See Dwg	20-250	DA0351-X	20	2/1.5	+10	1.25	+5	12	CMOS	14 Pin DIP	187
GaAs	3	6/42	0.1-150	DAT36217	0.02	3.0/1.9	+20	1.5	+15	10	TTL	SMA	189
									-15	10			
GaAs	3	0.25/1.75	10-1000	DAT38031	0.2	2/1.4	+10	1.6	+5	5	TTL	14 Pin Flatpack	188
GaAs	4	2/30	DC-2000	DAT41944	0.1	3/2	+10	1.7	+5	30	TTL	14 Pin DIP	191
									-15	25			
GaAs	4	3/30	DC-2000	DAT41994	0.05	4/3.1	+10	1.7	+5	30	TTL	24 Pin DIP	see website
									-5	3			
	4	10/70	DC-3000	DAT49064	5000	2/1.6	+30	1.4	+15	100	TTL	SMA	see website
GaAs	4	1/15	5-300	DAT42182	0.7	2.0/0.9	+10	1.5	+5	2	TTL	12 Pin TO-8	190
GaAs	4	1/15	10-1000	DA0984-1	0.03	2.5/1.9	+18	1.5	+5	15	TTL	24 Pin DIP	see website
									-12	15			
GaAs	4	1/15	10-1000	DA0784-1	0.03	2.5/1.9	+10	1.5	+5	2	TTL	12 Pin SMP	194
GaAs	4	1/15	10-2000	DAT48062	0.022	4/3.4	+13	1.7	+5	5	TTL	24 Pin Flatpack	192
GaAs	4	1/15	1800-4200	DAT48060	0.012	6/5	+10	1.7	+5	5	TTL	24 Pin Flatpack	193
GaAs	5	1/31	DC-500	DA0953	1	2.5/2	+13	1.5	+5	30	TTL	24 Pin DIP	see website
									-15	25			
GaAs	5	1/31	DC-500	DAT58032	0.2	3.0/1.8	+15	1.6	+5	30	TTL	24 Pin Flatpack	205
									-12	25			
GaAs	5	1/31	DC-2000	DAT51995	0.05	6/4	+10	1.5	+5	5	TTL	24 Pin DIP	198
									-5	5			
GaAs	5	6/60	1-1200	DAT56195	10	1.5/1	+15	1.35	+5	45	TTL	SMA	206
									-15	25			
GaAs	5	0.5/15.5	10-1000	DAT58019	0.03	2.5/1.9	+10	1.6	+5	2	TTL	14 Pin Flatpack	204
GaAs	5	2/62	10-1000	DA0757	0.05	7/4	+10	1.4	+5	5	TTL	24 Pin SMP	201
GaAs	5	2/62	10-1000	DA0857	0.05	7/4	+10	1.4	+5	5	TTL	24 Pin DIP	see website
GaAs	5	1/31	10-1000	DA0885	0.05	6.5/3.9	+10	1.4	+5	5	TTL	24 Pin DIP	207
	5	1/31	30-300	DA0659	1	3/2.2	+10	1.22	+5	60	TTL	38 Pin DIP	199
	5		50-70	CAT52045	0.1	5/1.7	+16	1.5	+5	20	TTL	24 Pin DIP	200
									-15	30			
	5	1/31	100-1000	DA0660	3	6/5.5	+10	1.55	+5	20	TTL	24 Pin DIP	196
	5	1/31	100-1000	DA0760	0.3	6/5	+10	1.5	+5	20	TTL	24 Pin SMP	202
	5	1/31	100-1900	DA0620	5	10/5	+13	1.7	+5	125	CMOS	24 Pin DIP	195
									-15	75			
	5	1/31	300-1200	DA0769	0.5	5/3.4	+15	1.5	+5	60	TTL	24 Pin SMP	203
	5	1/31	600-1400	CDA0666	1	4.5/2.5	+20	1.7	+5	50	TTL	SMA	see website
GaAs	6	1/63	DC-400	DA0996	0.2	4/2	+15	1.7	+5	35	TTL	24 Pin DIP	see website
									-15	25			
GaAs	6	1/63	DC-400	DAT69051	0.2	4/2.2	+15	1.7	+5	35	TTL	SMA	see website
									-15	25			
GaAs	6	1/63	DC-2000	DAT61996	0.1	6.5/4.5	+10	1.4	+5	5	TTL	24 Pin DIP	207
									-5	10			
GaAs	6	1/63	10-1000	DA0786	0.05	7.5/4.2	+10	1.4	+5	5	TTL	24 Pin SMP	see website
GaAs	6	1/63	10-1000	DA0886	0.05	7.5/4.2	+10	1.4	+5	5	TTL	24 Pin DIP	see website
	6	0.5/31.5	20-400	DA0956	0.035	7/5	+10	1.35	+5	550	TTL	38 Pin DIP	see website
	6	1/63	30-500	DA0844	20	6/4.2	+13	1.4	+5	85	TTL	38 Pin DIP	see website
	6	0.5/31.5	400-600	CAT65280	.30	/3.5	+23	1.6	+5	2.0	CMOS	14 Pin SM	208

Digital Attenuators Specification Table

	Number of Sect.	Available LSB/Range dB	Spec Freq MHz	Part Number	Switching Speed µSec/Max	Insertion Loss dB Max/Typ	RF Power dBm	VSWR MAX	DC Power Volts	DC Power mA	Control	Package	Page
	7	0.25/16	DC-400	100D0712	5000	3.5	+20	1.25	+24	-	-	SMA	*see website*
GaAs	7	0.5/63.5	DC-1000	DA0897	0.1	9/7.1	+13	1.35	+5	30	TTL	38 Pin DIP	211
									-15	35			
	7	0.5/63.5	5-1200	CAT76235	0.1	9/7.1	+13	1.35	+5	30	TTL	SMA	218
									-15	35			
	7	0.1/12.7	10-150	DA0375	0.035	4/3.5	+10	1.35	+5	540	TTL	38 Pin DIP	*see website*
GaAs	7	0.5/63.5	10-1000	DA0887	0.035	9/6.4	+10	1.35	+5	7	TTL	38 Pin DIP	209
GaAs	7	0.5/63.5	10-1000	CDA0867	0.035	9/6.4	+10	1.35	+5	7	TTL	SMA	215
	7	0.1/12.7	30-150	DA0775	0.035	5/4	+10	1.35	+5	540	TTL	38 Pin SMP	213
	7	0.5/63.5	30-200	DA0617	0.035	8/5.8	+10	1.35	+5	640	TTL	38 Pin DIP	*see website*
	7	0.5/63.5	30-250	DA0717	0.035	8/5.8	+10	1.35	+5	640	TTL	38 Pin SMP	212
	7	0.5/63.5	30-500	DA0285	20	6/4.5	+13	1.35	+15	50	CMOS	38 Pin DIP	*see website*
	7	0.5/63.5	30-500	DA0295	20	6/4.2	+13	1.35	+5	85	TTL	38 Pin DIP	*see website*
	7	0.5/63.5	30-500	DA0795	20	6/4.5	+10	1.35	+5	85	TTL	38 Pin SMP	214
	7	0.5/63.5	30-500	100C1585	20	6/4.2	+13	1.35	+15	50	CMOS	SMA	*see website*
	7	0.5/63.5	30-500	100C1595	20	6/4.2	+13	1.35	+5	85	TTL	SMA	222
	7	0.5/63.5	45-200	100C1757	0.035	8/6	+10	1.35	+5	640	TTL	SMA	223
	7	0.5/63.5	100-500	DAT71987	10	8/4.5	+10	1.6	+5	30	TTL	38 Pin DIP	210
	7	0.5/63.5	200-1000	DAT76287	1.5	8/5.2	+10	1.6	+5	15	TTL	SMA	221
	7	1/127	300-1000	DAT76199	0.1	5/3.5	+18	1.3	+15	20	TTL	SMA	216
									-15	10			
	7	0.5/63.5	800-2000	DAT76228	1.5	9/7	+10	1.6	+5	15	TTL	SMA	220
	7	0.5/63.5	1700-2000	DAT76227	1.5	9/7	+10	1.6	+5	15	TTL	SMA	219
	7	0.5/47.5	2200-2800	DAT76191	0.1	4/3.2	+15	1.6	+5	120	TTL	SMA	217
	8	0.25/63.75	440-480	CAT82048	0.1	5.9/5.2	+20	1.5	+5	200	TTL	24 Pin DIP	225
									-15	150			
	8	0.25/63.75	600-800	DAT86198	0.1	4.5/3.4	+18	1.3	+15	20	TTL	SMA	224
									-15	50			
	8	0.25/63.75	1700-2000	DAT82050	1.5	9/7	+20	1.6	+5	15	TTL	24 Pin Dip	*see website*

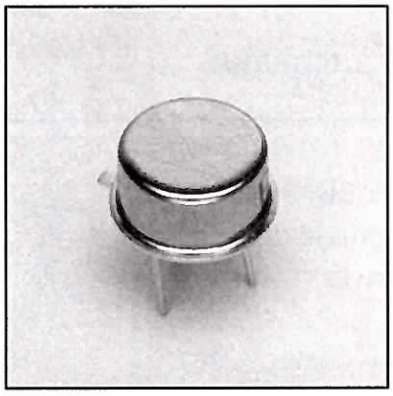

MODEL NUMBER DA0960

Fixed Attenuator

FEATURES

- DC-3000 MHz
- Fixed Attenuation Values
- Excellent VSWR
- 1 Watt CW
- Small Hermetic TO-5 Package

Fixed

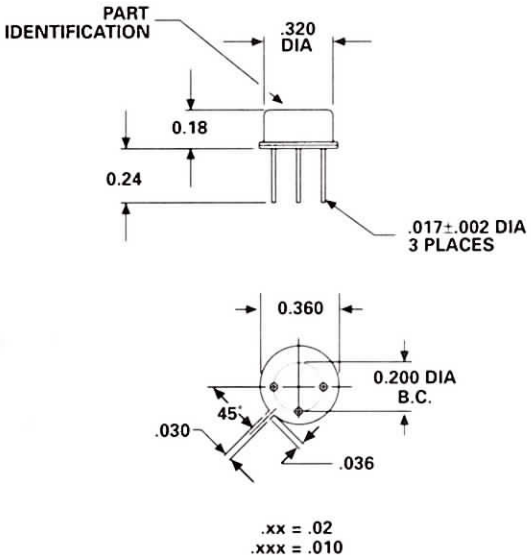

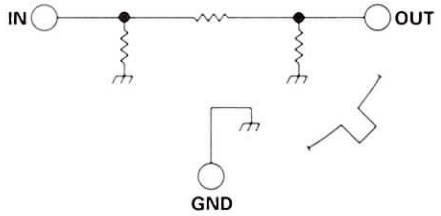

PART NUMBER CHART	
PART NUMBER	FIXED ATTEN VALUE
DA0960-1	1 dB
DA0960-2	2 dB
DA0960-3	3 dB
DA0960-5	5 dB
DA0960-10	10 dB
DA0960-20	20 dB

TYPICAL PERFORMANCE

at 25°C

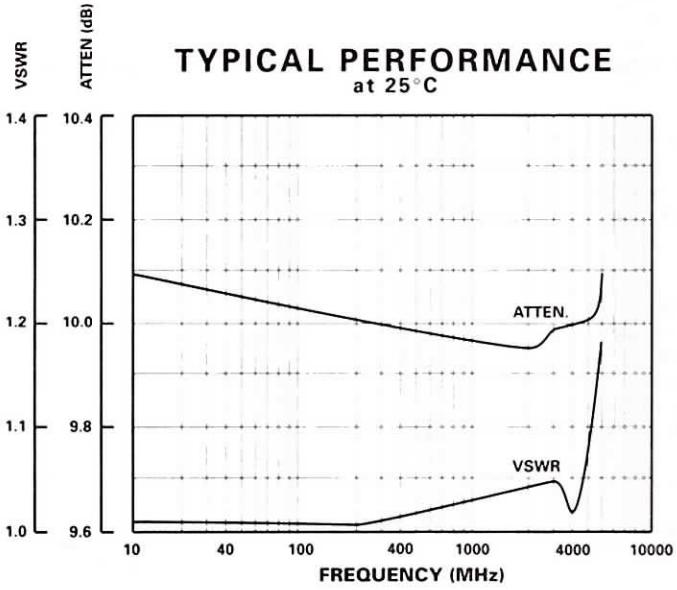

GUARANTEED PERFORMANCE

Parameter		Min	Typ	Max	Units	Conditions
Operating Frequency		DC		3000	MHz	
Attenuation	*Value*				dB	See Table
	Accuracy				dB	± (0.25 dB + 2% of Atten. Setting in dB)
VSWR			1.05/1	1.2/1		
Impedance			50		OHMS	
RF Power	*Operate*			+30	dBm	0.1 dB Compression
	No Damage			+33	dBm	
Operating Temperature		-55	+25	+125	°C	TA

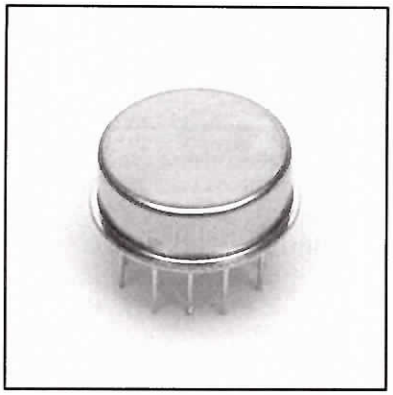

MODEL NUMBER DA0816

GaAs 1 Section Attenuator

FEATURES

- 20-700 MHz
- 0.4 mA, +5 VDC
- 22 nSec Switching Speed
- 10 nSec Rise Time
- 10, 20, or 32 dB Steps
- TTL Driver

1 BIT

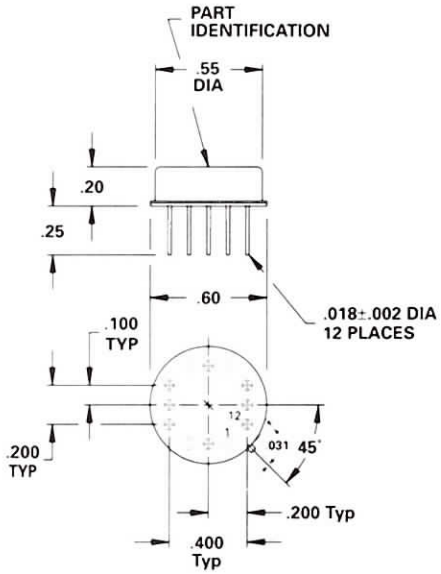

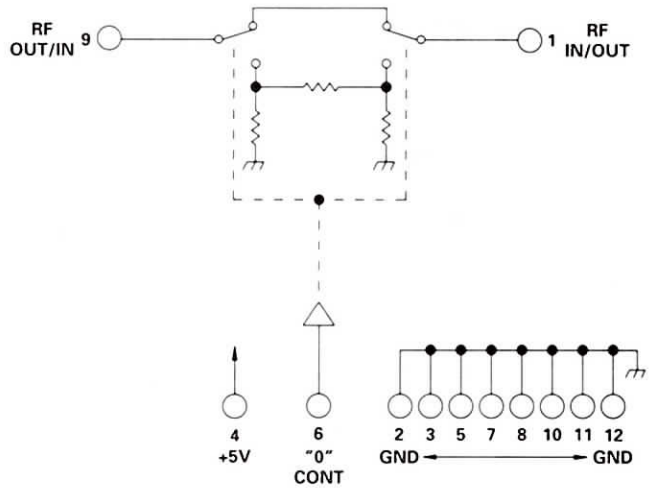

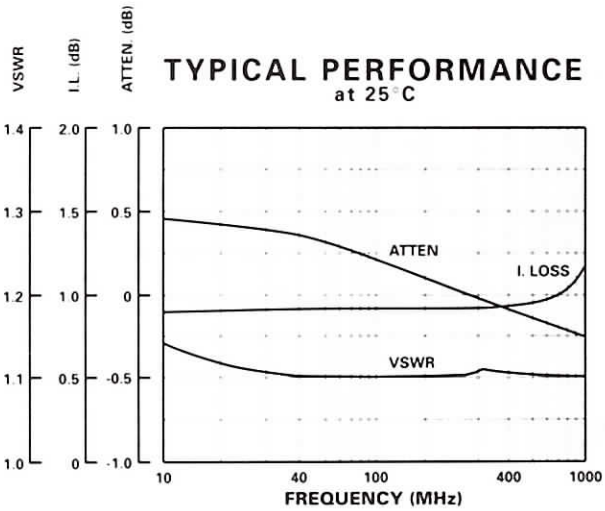

TABULATION CHART	
Part Number	Attenuation
DA0816-32	32 dB
DA0816-20	20 dB
DA0816-10	10 dB
DA0816-11	11 dB

GUARANTEED PERFORMANCE

Parameter		Min	Typ	Max	Units	Conditions
Operating Frequency		20		700	MHz	
DC Current			0.4	1	mA	At +5 VDC Supply
Control Type			TTL			1 Line, Reverse Logic Available Logic "0" = Thru Logic "1" = Attenuation
Control Current	*High*		0	±20	µA	VIH = +3.0 V
	Low		0	±20	µA	VIL = +0.5 V
Insertion Loss			1.0	1.5	dB	
Attenuation	*LSB*				dB	See Table
	Range				dB	See Table
	Accuracy				dB	± (0.15 dB + 2% of Atten. Setting in dB)
VSWR			1.1/1	1.25/1		
Impedance			50		OHMS	
Switching Speed			22	35	nSec	50% TTL to 90% / 10% RF
Transition (Rise/Fall) Time			10		nSec	90% / 10% or 10% / 90% RF
Switching (Video) Transients			45		mV	Peak Value
Intercept Points	*2nd*		+68		dBm	140 MHz / 200 MHz
	3rd		+35		dBm	140 MHz / 100 MHz
RF Power	*Operate*		+12	+10	dBm	0.1 dB Compression
	No Damage			+27	dBm	
Operating Temperature		-55	+25	+125	°C	TA

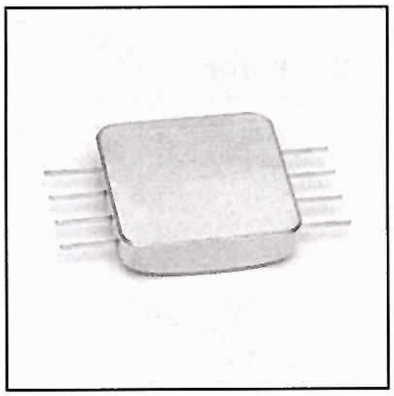

MODEL NUMBER DA0879

PIN Diode 1 Section Attenuator

FEATURES

- 800-1200 MHz
- 50 dB Attenuator
- 0.9 dB Insertion Loss
- Constant Phase
- TTL Control
- Small 8 Pin 0.5 Sq. Package

1 BIT

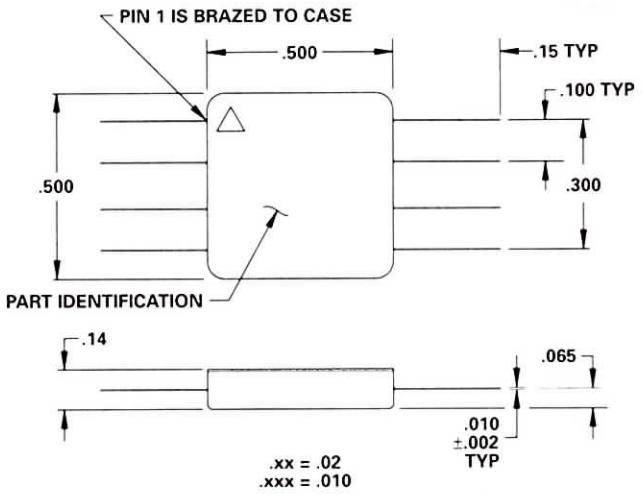

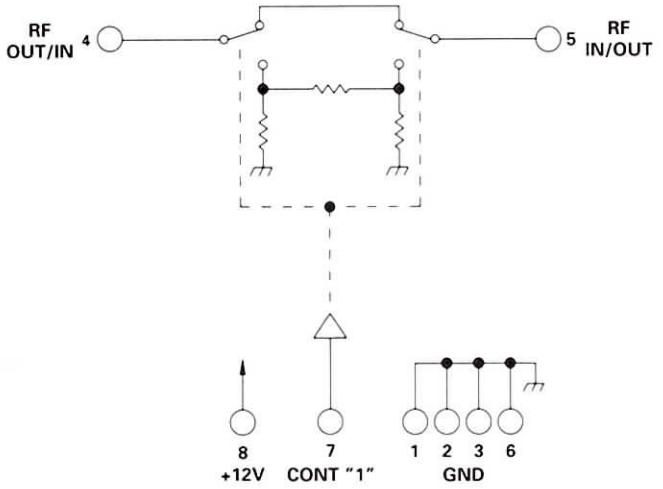

TYPICAL PERFORMANCE
at 25°C

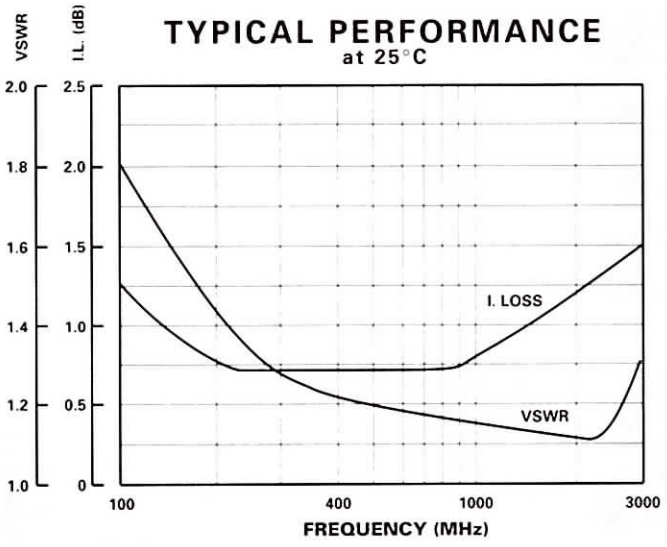

GUARANTEED PERFORMANCE

Parameter		Min	Typ	Max	Units	Conditions
Operating Frequency		800		1200	MHz	
DC Current			14	20	mA	At +12 VDC Supply
Control Type			TTL			1 Line Logic "0" = Attenuation Logic "1" = Thru
Control Current	*High*		0		µA	VIH = +2.7 V
	Low		0		µA	VIL = +0.5 V
Insertion Loss			0.9	1.2	dB	
Attenuation	*LSB*		50		dB	
	Range	0		50	dB	
	Accuracy				dB	± (0.25 dB +2% of Atten. Setting in dB)
Phase Change Vs. Attenuation			2	±5	DEG	
VSWR			1.15/1	1.25/1		
Impedance			50		OHMS	
Switching Speed			0.3	1	µSec	50% TTL to 90% / 10% RF
Transition (Rise/Fall) Time			80		nSec	90% / 10% or 10% / 90% RF
Switching (Video) Transients			2.1		V	Peak Value
Intercept Points	*2nd*		+90		dBm	155 MHz / 750 MHz
	3rd		+45		dBm	755 MHz / 750 MHz
RF Power	*Operate*		+30	+20	dBm	0.1 dB Compression
	No Damage			+30	dBm	
Operating Temperature		-55	+25	+125	°C	TA

DAICO *Industries*

310.507.3242 • FAX 310.507.5701 • www.daico.com

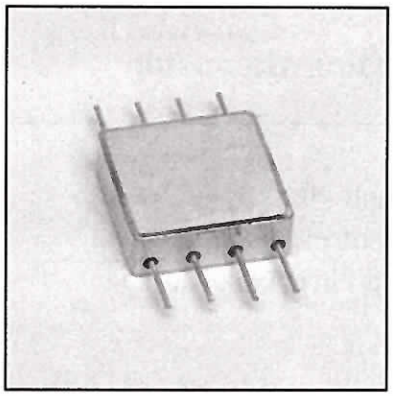

MODEL NUMBER DA0944-10

GaAs 1 Section Attenuator

FEATURES

- 5-1000 MHz
- 0.4 mA, +5 VDC
- TTL Control
- 0.380 Sq. Package

1 BIT

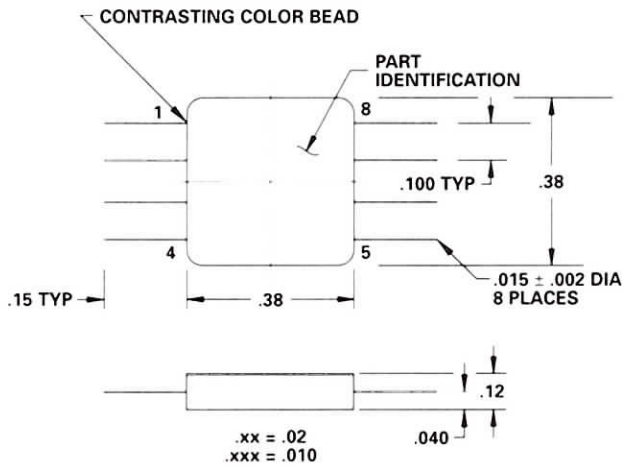

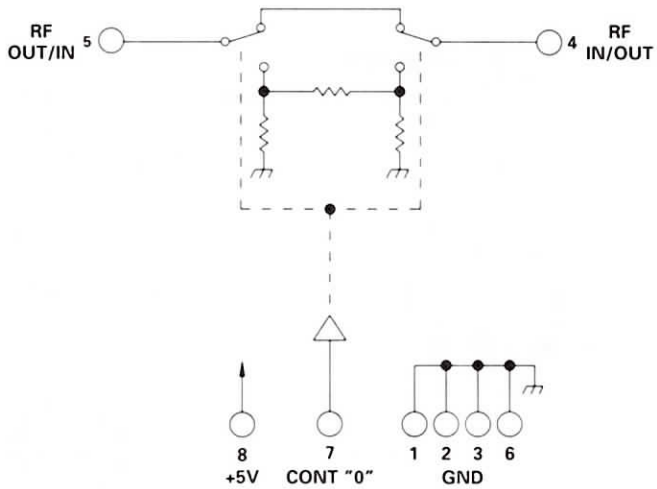

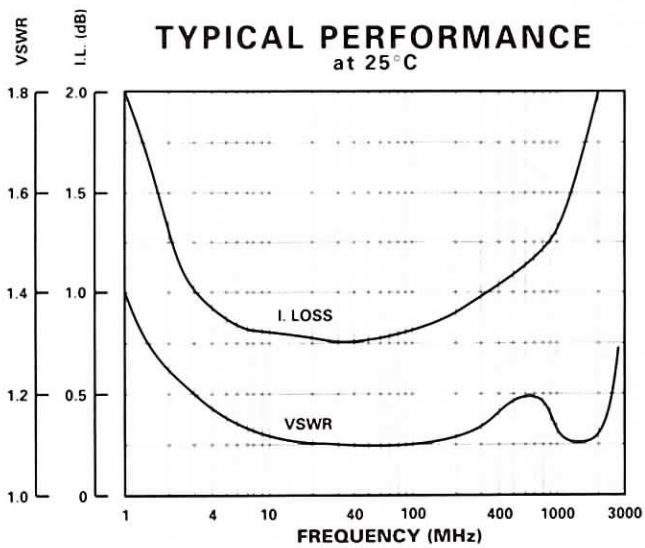

GUARANTEED PERFORMANCE

Parameter		Min	Typ	Max	Units	Conditions
Operating Frequency		5		1000	MHz	
DC Current			0.4	1.0	mA	At +5 VDC Supply
Control Type			TTL			1 Line Logic "0" = Thru Logic "1" = Attenuation
Control Current	*High*		0	±20	µA	VIH = +3.0 V
	Low		0	±20	µA	VIL = +0.5 V
Insertion Loss			0.9	1.2	dB	5 - 200 MHz
			1.4	2.0	dB	200 - 1000 MHz
Attenuation	*LSB*				dB	10
	Range	0		10	dB	
	Accuracy				dB	± (0.25 dB +2% of Atten. Setting in dB)
VSWR			1.2/1	1.35/1		
Impedance			50		OHMS	
Switching Speed			30	50	nSec	50% TTL to 90% / 10% RF
Transition (Rise/Fall) Time			20		nSec	10% / 90% - 90% / 10% RF
Switching (Video) Transients			45		mV	Peak Value
Intercept Points	*2nd*		+73		dBm	70 MHz / 50 MHz
	3rd		+48		dBm	35 MHz / 50 MHz
RF Power	*Operate*		+13	+10	dBm	0.1 dB Compression
	No Damage			+30	dBm	
Operating Temperature		-55	+25	+125	C	TA

DAICO Industries

310.507.3242 • FAX 310.507.5701 • www.daico.com

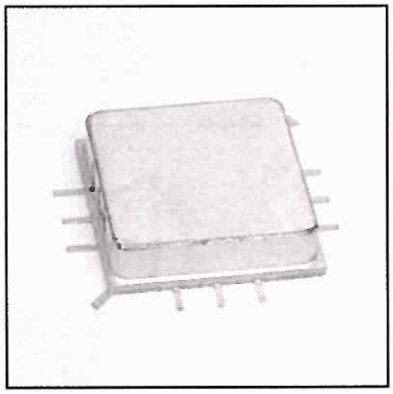

MODEL NUMBER DAT15015

GaAs 1 Section Attenuator

FEATURES

- 20-700 MHz
- 0.4 mA, +5 VDC
- 22nSec Switching Speed
- 10 nSec Rise Time
- 10, 20, or 30 dB Steps
- TTL Driver

1 BIT

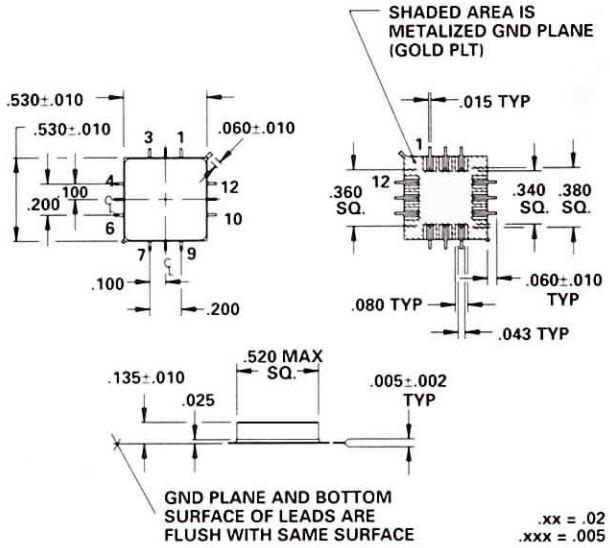

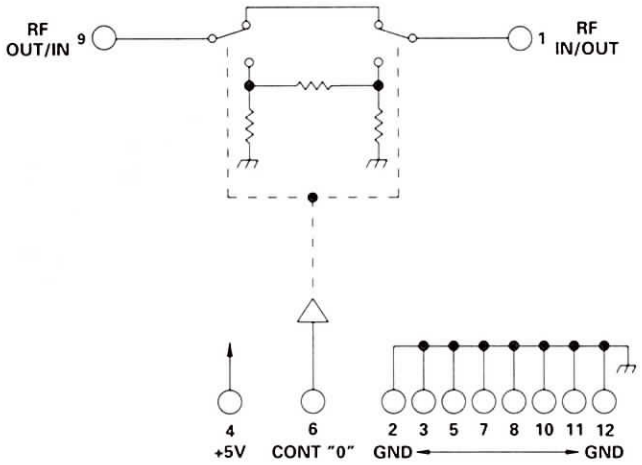

TYPICAL PERFORMANCE
at 25°C

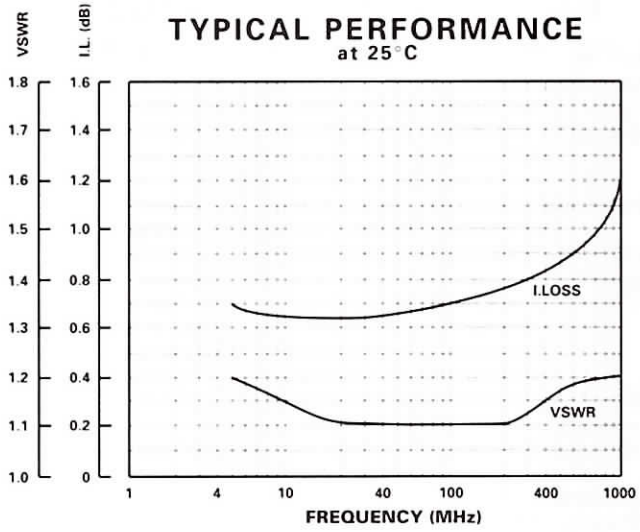

GUARANTEED PERFORMANCE

Parameter		Min	Typ	Max	Units	Conditions
Operating Frequency		20		700	MHz	
DC Current			0.2	1.0	mA	At +5 VDC Supply
Control Type			TTL			1 Line, Reverse Logic Available
						Logic "0" = Thru
						Logic "1" = Attenuation
Control Current	*High*		0	±20	µA	VIH = +3.0 V
	Low		0	±20	µA	VIL = +0.5 V
Insertion Loss			1.0	1.5	dB	
Attenuation	*LSB*				dB	See Table
	Range				dB	See Table
	Accuracy				dB	See Table
VSWR			1.1/1	1.25/1		
Impedance			50		OHMS	
Switching Speed			20	35	nSec	50% TTL to 90% / 10% RF
Transition (Rise/Fall) Time			10		nSec	90% / 10% or 10% / 90% RF
Switching (Video) Transients			45		mV	Peak Value
Intercept Points	*2nd*		+68		dBm	140 MHz / 200 MHz
	3rd		+35		dBm	140 MHz / 100 MHz
RF Power	*Operate*		+12	+10	dBm	0.1 dB Compression
	No Damage			+27	dBm	
Operating Temperature		-55	+25	+125	°C	TA

TABULATION CHART

Part Number	Attenuation
DAT15015	10 dB ± .35 dB
DAT15016	20 dB ± .55 dB
DAT15017	30 dB ± .75 dB

DAICO Industries
310.507.3242 • FAX 310.507.5701 • www.daico.com

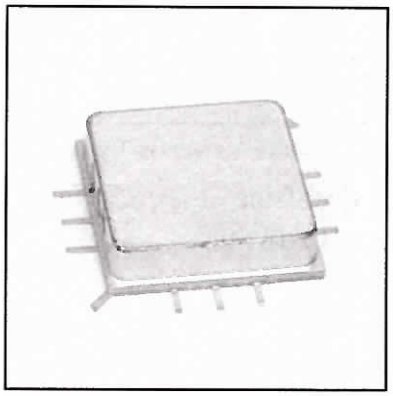

MODEL NUMBER DAT15073

Attenuator 1 Section

FEATURES

- 200-600 MHz
- Small Size
- Surface Mount
- 0.2mA, 5 Volt

1 BIT

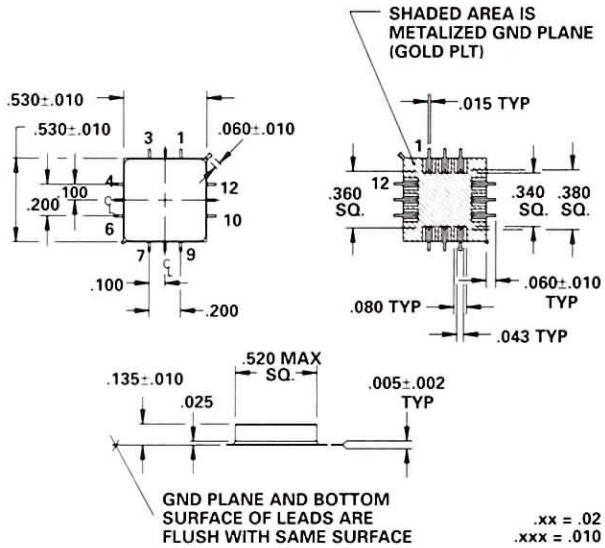

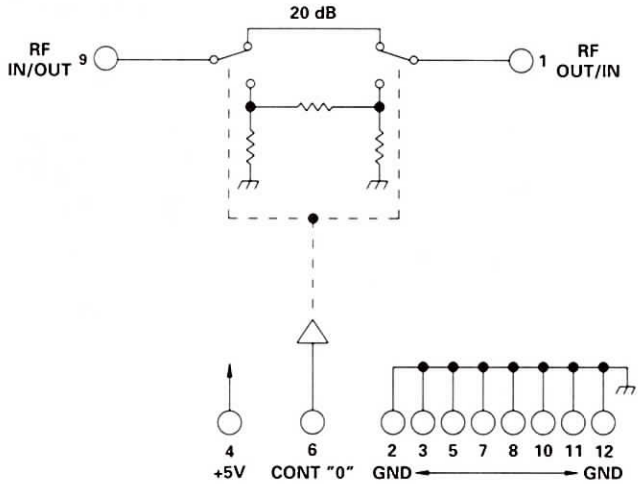

TYPICAL PERFORMANCE

at 25°C

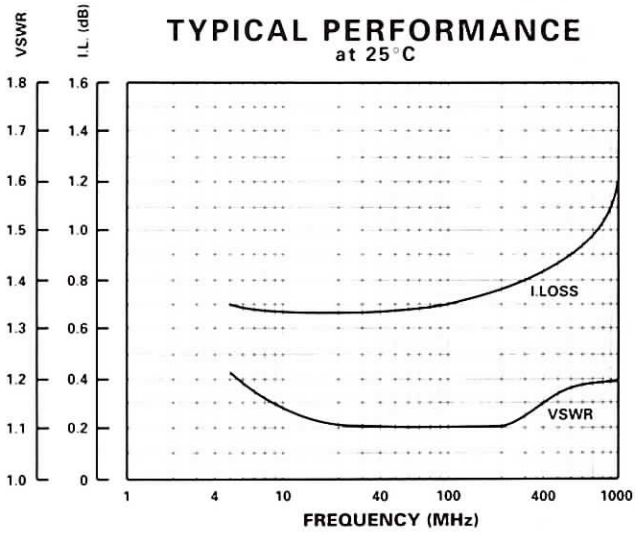

GUARANTEED PERFORMANCE

Parameter		Min	Typ	Max	Units	Conditions
Operating Frequency		200		600	MHz	
DC Current			0.2	1.0	mA	At +5 VDC Supply
Control Type			CMOS			1 Line Logic "0" = Thru Logic "1" = Attenuation
Control Current	*High*		0	±20	µA	3 - 5 Volts
	Low		0	±20	µA	0 - 0.5 Volts
Insertion Loss			1.0	1.5	dB	
Attenuation	*LSB*		20		dB	See Table
	Range	0		20	dB	See Table
	Accuracy				dB	± (0.15 dB +2% of Atten Setting in dB)
	Flatness			±0.2	dB	
VSWR			1.1/1	1.25/1		
Impedance			50		OHMS	
Switching Speed			20	50	nSec	50% Control Signal 90% / 10% RF
Transition (Rise/Fall) Time			10		nSec	90% / 10% or 10% / 90% RF
Switching (Video) Transients			45		mV	Peak Value
Intercept Points	*2nd*	+75	+80		dBm	
	3rd	+40	+48		dBm	
RF Power	*Operate*		+12	+10	dBm	0.1 dB Compression
	No Damage			+27	dBm	
Operating Temperature		0	+25	+65	°C	TA
Non-Operating Temperature		-34		+95	°C	TA

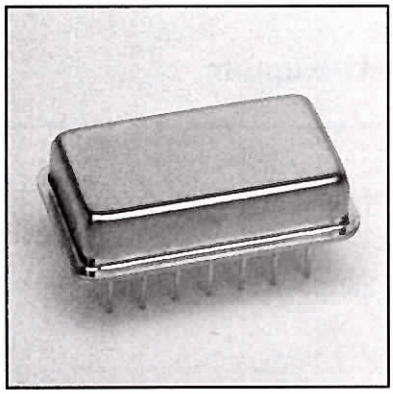

MODEL NUMBER DA0351

PIN Diode 2 Section Attenuator

FEATURES

- 20-250 MHz
- 12 mA, +5 VDC
- +40 dBm 3rd Order Intercept
- +5V CMOS Driver
- Various Steps Available

2 BIT

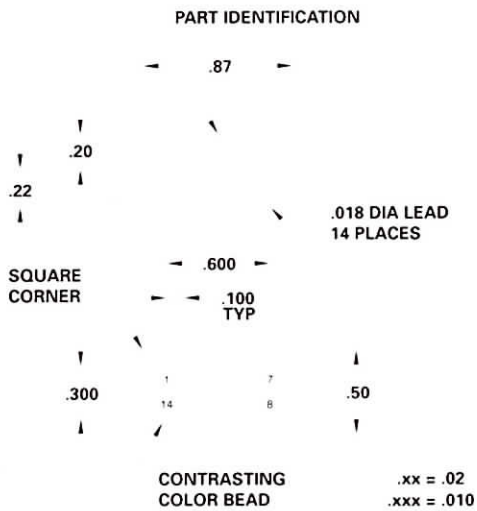

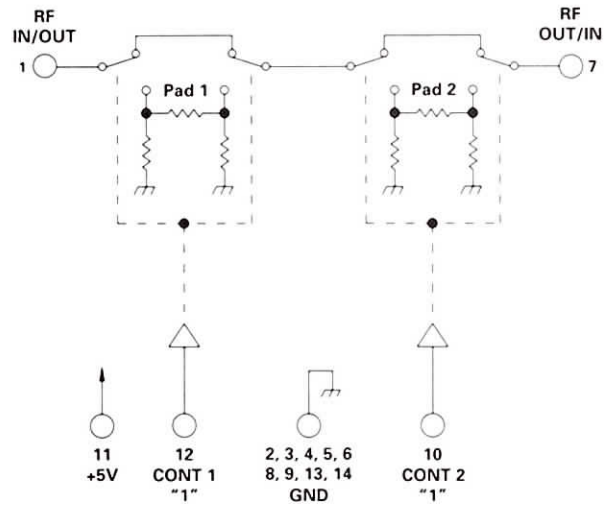

ATTENUATION TABLE

Dash Number	PAD 1	PAD 2
-1	2 dB	4 dB
-2	8 dB	16 dB
-3	1 dB	32 dB

TYPICAL PERFORMANCE
at 25°C

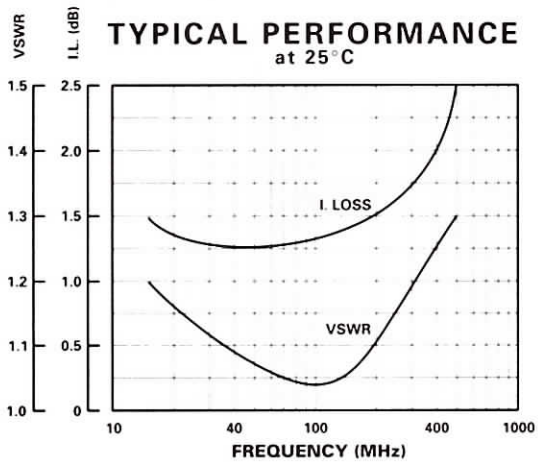

GUARANTEED PERFORMANCE

Parameter		Min	Typ	Max	Units	Conditions
Operating Frequency		20		250	MHz	
DC Current			12		mA	At +5 VDC Supply
Control Type			CMOS			2 Line
						Logic "1" = Thru
						Logic "0" = Attenuation
Control Current	*High*			±1	µA	VIH = + V
	Low			±1	µA	VIL = 0 V
Insertion Loss			1.5	2.0	dB	MHz
Attenuation	*LSB*				dB	See Attenuation Table
	Accuracy				dB	± (0.15 dB +2% of Atten.
						Setting in dB)
VSWR			1.15/1	1.25/1		
Impedance			50		OHMS	
Switching Speed			3	20	µSec	50% Control To 90% / 10% RF
Switching (Video) Transients			60		mV	Peak Value
Intercept Points	*2nd*		+71		dBm	
	3rd		+42		dBm	
RF Power	*Operate*		+11	+10	dBm	0.1 dB Compression
Operating Temperature		-55	+25	+125	C	TA

DAICO *Industries*

310.507.3242 • FAX 310.507.5701 • www.daico.com

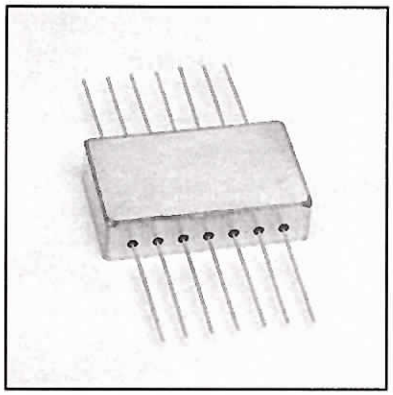

MODEL NUMBER DAT38031

GaAs 3 Section Attenuator

FEATURES

- 10-1000 MHz
- 0.25 dB LSB, 1.75 dB Range
- 20 nSec Switching Speed
- 70 mV Transients
- 2.4 mA @ +5 VDC
- 14 PIN Flatpack

3 BIT

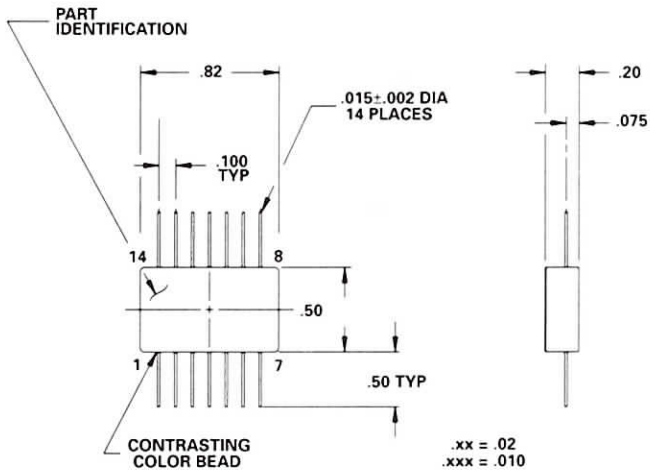

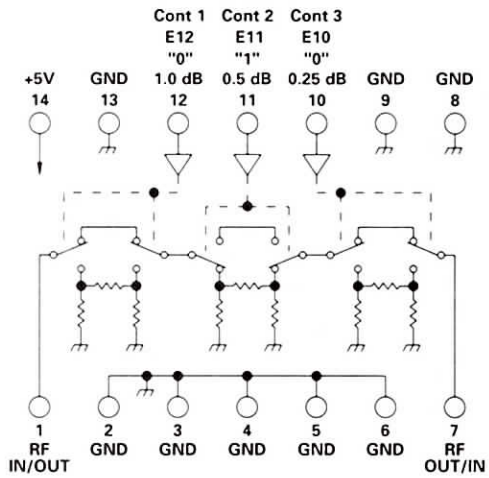

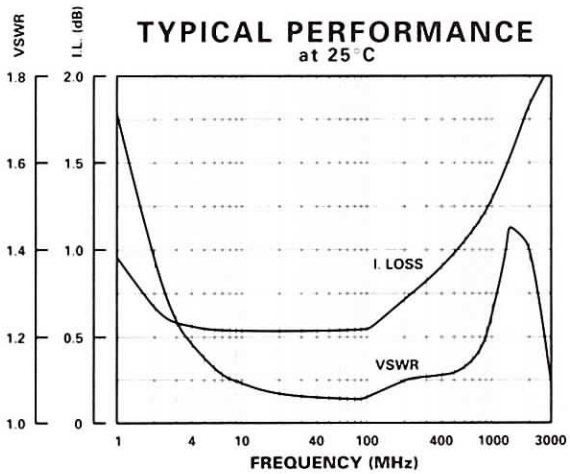

GUARANTEED PERFORMANCE

Parameter		Min	Typ	Max	Units	Conditions
Operating Frequency		10		1000	MHz	
DC Current			2.4	5	mA	At +5 VDC Supply
Control Type			TTL			3 Line See Decoding Table
Control Current	*High*		0	50	µA	VIH = +2.0 Volts
	Low		0	-500	µA	VIL = +0.8 Volts
Insertion Loss			1.4	2.0	dB	
Attenuation	*LSB*		.25		dB	
	Range		1.75		dB	0.25, 0.50, 1.0
	Accuracy			±0.2	dB	
VSWR			1.15/1	1.6/1		
Impedance			50		OHMS	
Switching Speed			20	200	nSec	50% TTL or 10% / 90% RF
Transition (Rise/Fall) Time			10	100	nSec	90% / 10% or 10% / 90% RF
Switching (Video) Transients			70	100	mV	Peak Value
Intercept Points	*2nd*		+60		dBm	
	3rd	+30	+41		dBm	
RF Power	*Operate*		+15	+10	dBm	0.1 dB Compression
	No Damage			+10	dBm	
Operating Temperature		-40	+25	+90	°C	TA

CONTROL DECODING

CONTROL INPUT E12	E11	E10	ATTENUATION SETTING
0	0	0	REFERENCE (THRU LINE)
0	0	1	.025 dB
0	1	0	0.50 dB
0	1	1	0.75 dB
1	0	0	1.0 dB
1	0	1	1.25 dB
1	1	0	1.50 dB
1	1	1	1.75 dB

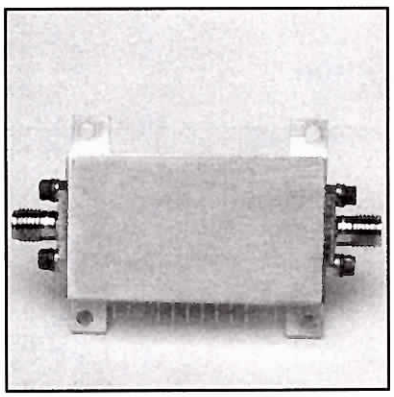

MODEL NUMBER DAT36217

Attenuator 3 Section

FEATURES

- 0.10-150 MHz
- High Intercept Points
- Stable Phase
- Fast Speed, 150 nSec

3 BIT

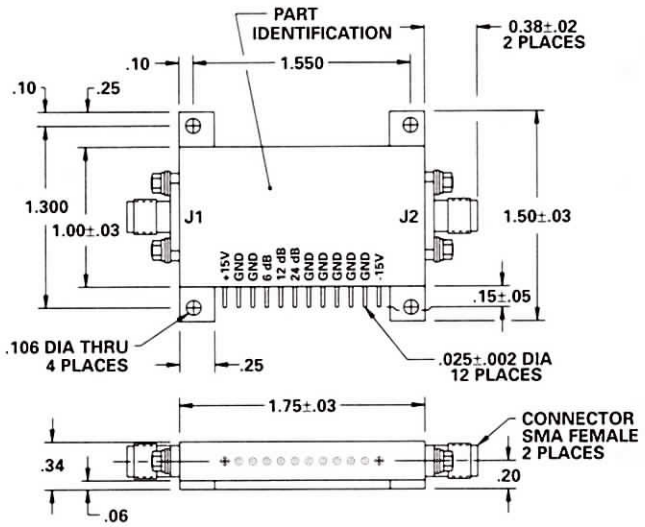

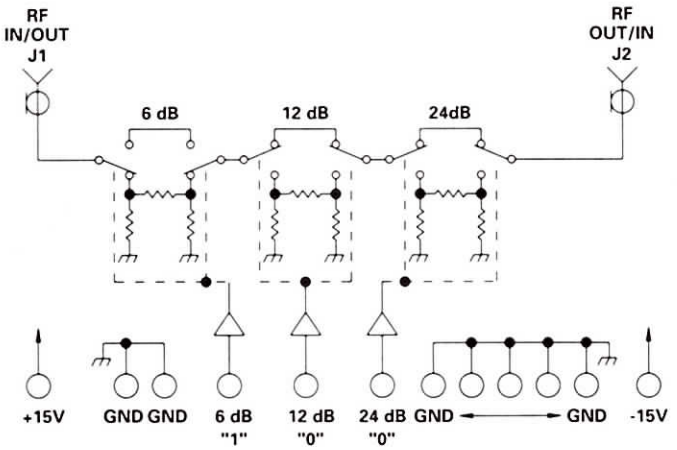

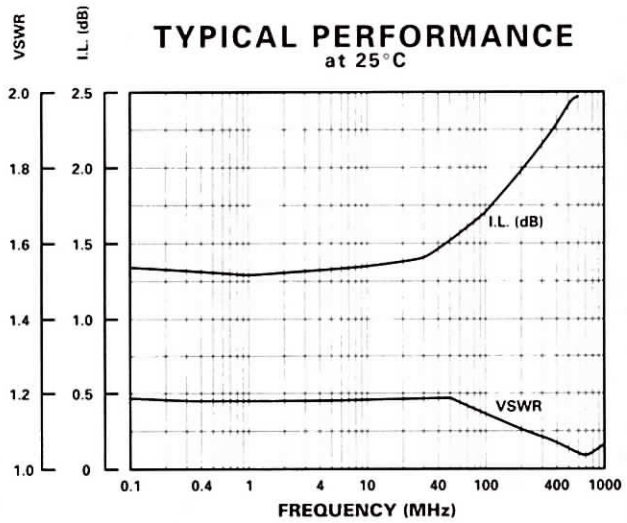

GUARANTEED PERFORMANCE

Parameter		Min	Typ	Max	Units	Conditions
Operating Frequency		0.10		150	MHz	
DC Current			3.5	10	mA	At +15 VDC Supply
			3.5	10	mA	At -15 VDC Supply
Control Type			TTL			3 Line Logic "1" = Attenuation
Control Current	*High*		±10	±100	µA	VIH = +2.7 Volts
	Low		±10	±100	µA	VIL = 0.5 Volts
Insertion Loss			1.90	3	dB	
	Flatness		0.60	2	dB	
Attenuation	*LSB*		6		dB	
	Range	42			dB	6, 12, 24 dB
	Accuracy				dB	± (0.25 dB +2% of Atten. Setting in dB)
	VS Range		0.3	+1	DEG	
Phase Shift Vs. Attenuation			0.3	1	DEG	
VSWR			1.2/1	1.5/1		
Impedance			50		OHMS	
Switching Speed			150	300	nSec	50% TTL - 90% / 10% RF
Transition (Rise/Fall) Time			20		nSec	10% / 90% or 90% / 10% RF
Switching (Video) Transients			29		mV	Peak Value
Intercept Points	*2nd*	+75	+85		dBm	
	3rd	+35	+58		dBm	
RF Power	*Operate*		+25	+20	dBm	1 dB Compression
	No Damage			+27	dBm	
Operating Temperature		-55	+25	+125	°C	TA

DAICO *Industries*

310.507.3242 • FAX 310.507.5701 • www.daico.com

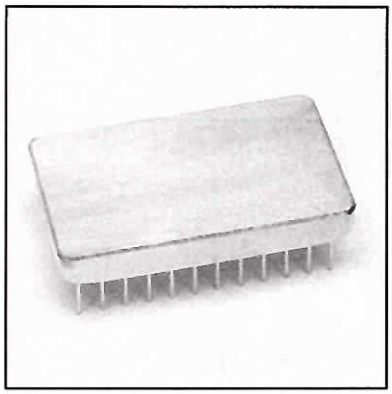

MODEL NUMBER DAT42182

Attenuator 4 Section

FEATURES

- 5-300 MHz
- Low Insertion Loss
- +51 dB Third Order Intercept
- 36 mV Transients
- 350 nSec Switching Speed
- TTL Control
- 24 Pin DIP

4 BIT

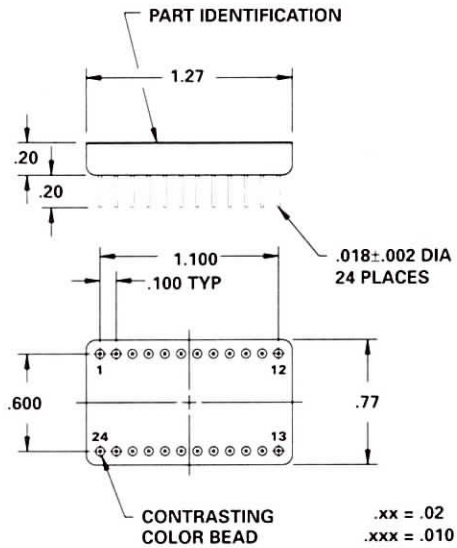

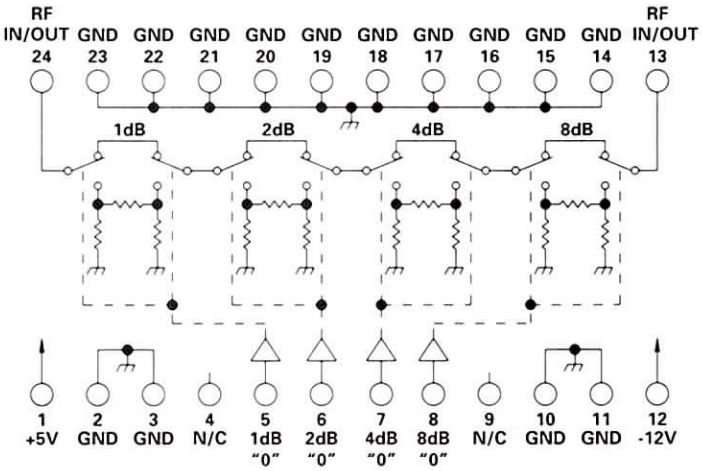

N/C = NO INTERNAL CONNECTION

TYPICAL PERFORMANCE

at 25°C

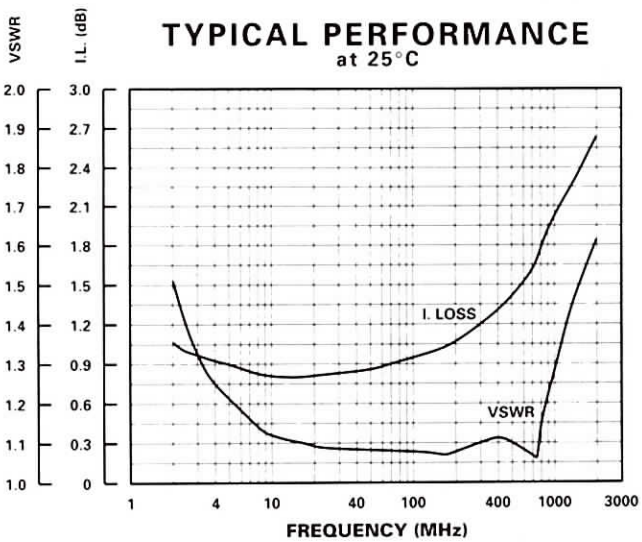

GUARANTEED PERFORMANCE

Parameter		Min	Typ	Max	Units	Conditions
Operating Frequency		5		300	MHz	
DC Current			3.3	15	mA	At +5 VDC Supply
			8.8	15	mA	At -12 VDC Supply
Control Type			TTL			4 Line Logic "1" = Attenuation
Control Current	*High*		1	40	µA	VIH = +2.7 Volts
	Low		1	40	µA	VIL = +0.5 Volts
Insertion Loss			0.92	2.0	dB	
Attenuation	*LSB*		1		dB	
	Range	0		15	dB	1, 2, 4, 8
	Accuracy				dB	± (0.25 dB +2% of Atten. Setting in dB)
VSWR			1.15/1	1.5/1		
Impedance			50		OHMS	
Switching Speed			350	700	nSec	50% TTL to 90% / 10% RF
Transition (Rise/Fall) Time			100		nSec	90% / 10% or 10% / 90% RF
Switching (Video) Transients			36	100	mV	Peak Value
Intercept Points	*2nd*	+75	+83		dBm	160 / 90 MHz
	3rd	+45	+51		dBm	80 / 90 MHz
RF Power	*Operate*		+25	+18	dBm	0.1 dB Compression
	No Damage			+27	dBm	
Operating Temperature		0	+25	+50	°C	TA

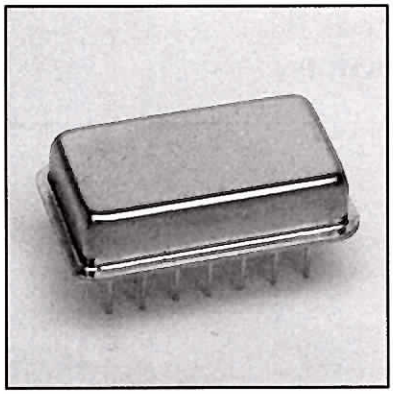

MODEL NUMBER DAT41944

GaAs 4 Section Attenuator

FEATURES

- DC - 2000 MHz
- 2 dB LSB, 30 dB Range
- TTL Driver
- 14 Pin DIP
- High Intercept Point

4 BIT

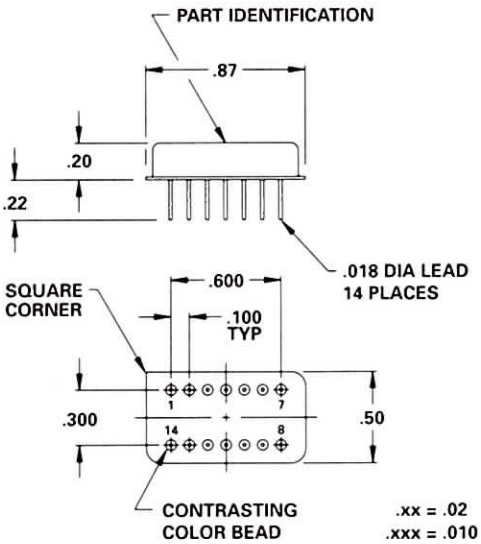

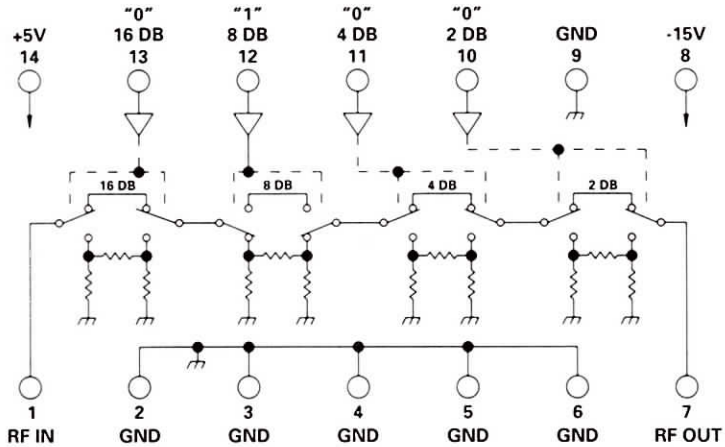

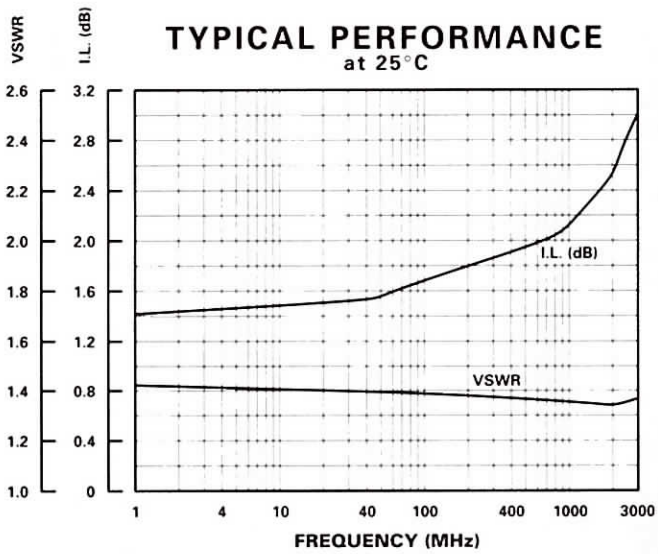

GUARANTEED PERFORMANCE

Parameter		Min	Typ	Max	Units	Conditions
Operating Frequency		DC		2000	MHz	
DC Current			28	35	mA	At +5 VDC Supply
			18	25	mA	At -15 VDC Supply
Control Type			TTL			4 Line Logic "0" = Thru Logic "1" = Attenuation
Control Current	*High*		1	±40	µA	VIH = +2.7 Volts
	Low		1	±40	µA	VIL = +0.5 Volts
Insertion Loss			2.5	3.0	dB	
Attenuation	*LSB*		2.0		dB	
	Range	0		30	dB	2, 4, 8, 16
	Accuracy				dB	± (0.25 dB +2% of Atten. Setting in dB)
VSWR			1.4/1	2/1		
Impedance			50		OHMS	
Switching Speed			33	100	nSec	50% TTL to 90% / 10% RF
Transition (Rise/Fall) Time			20	25	nSec	10% / 90% - 90% / 10% RF
Switching (Video) Transients			38	100	mV	Peak Value
Intercept Points	*2nd*	+50	+54		dBm	Above 20 MHz
	3rd	+30	+36		dBm	Above 20 MHz
RF Power	*Operate*		+16	+10	dBm	0.1 dB Compression (>100 MHz)
	No Damage			+20	dBm	
Operating Temperature		-55	+25	+85	°C	TA

DAICO *Industries*

310.507.3242 • FAX 310.507.5701 • www.daico.com

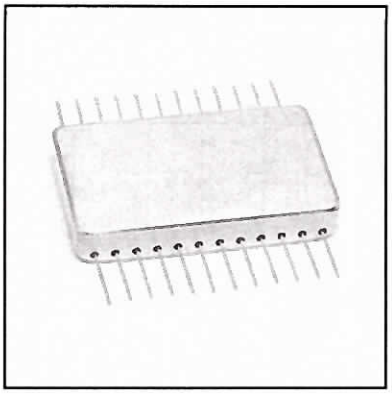

MODEL NUMBER DAT48062

Attenuator 4 Section

FEATURES

- 10 - 2000 MHz
- 50 nSec Switching Speed
- CMOS Control
- 24 Pin Flatpack

4 BIT

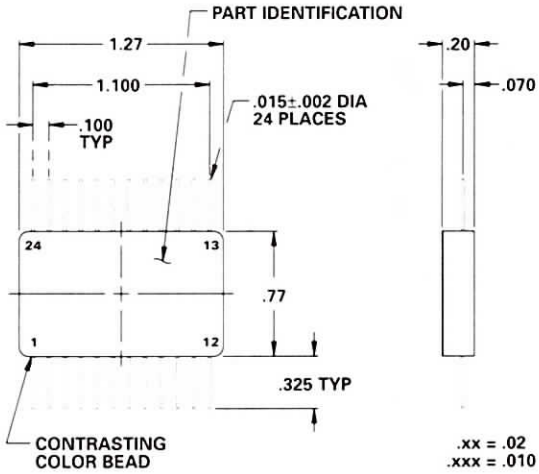

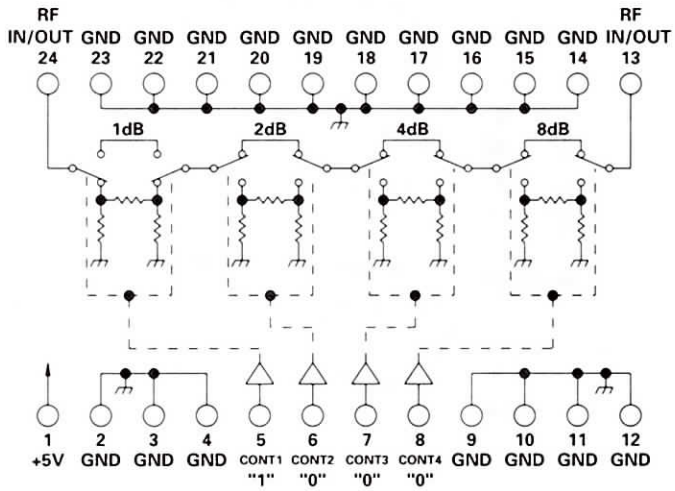

TYPICAL PERFORMANCE

at 25°C

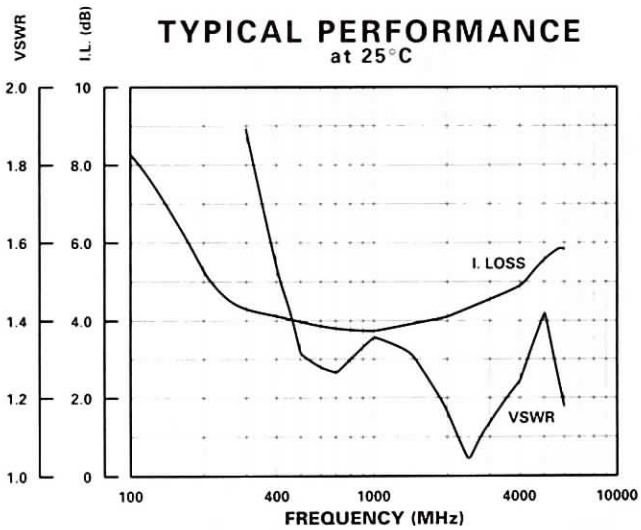

GUARANTEED PERFORMANCE

Parameter		Min	Typ	Max	Units	Conditions
Operating Frequency		1800		4200	MHz	
DC Current			0.8	5.0	mA	At +5 VDC Supply
Control Type			CMOS			4 Line Logic "0" = Thru Logic "1" = Attenuation
Control Current	*High*		0	±40	µA	2.7 Volts
	Low		0	±40	µA	0.5 Volts
Insertion Loss			5.0	6.0	dB	
Attenuation	*LSB*		1		dB	
	Range	0		15	dB	1, 2, 4, 8
	Accuracy				dB	± (0.25 dB +5% of Atten. Setting in dB)
	Flatness			+0.2	dB	
VSWR			1.3/1	1.7/1		
Impedance			50		OHMS	
Switching Speed			27	50	nSec	50% TTL to 90% / 10% RF 90% / 10% RF
Transition (Rise/Fall) Time			12		nSec	90% / 10% or 10% / 90% RF
Switching (Video) Transients			75		mV	Peak Value
Intercept Points	*2nd*	+65	+70		dBm	1950 / 750 MHz Inputs
	3rd	+38	+43		dBm	975 / 750 MHz Inputs
RF Power	*Operate*		+22	+10	dBm	0.1 dB Compression
	No Damage			+23	dBm	
Operating Temperature		0	+25	+65	°C	TA
Non-Operating Temperature		-34		+95	°C	TA

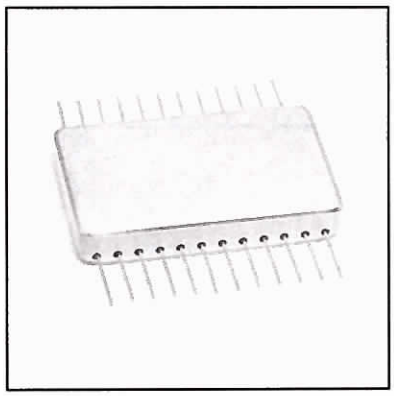

MODEL NUMBER DAT48060

Attenuator 4 Section

FEATURES

- 1800-4200 MHz
- 50 nSec Switching Speed
- CMOS Control
- 24 Pin Flatpack

4 BIT

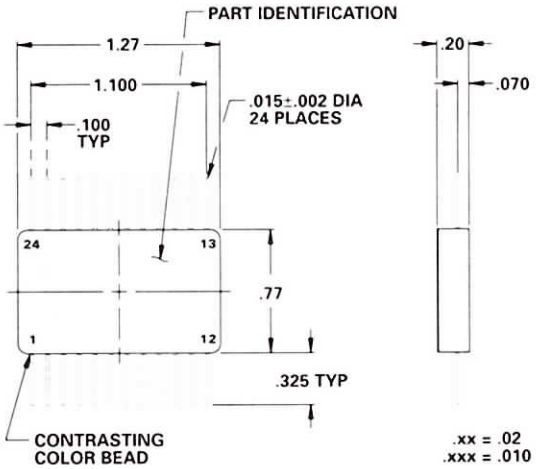

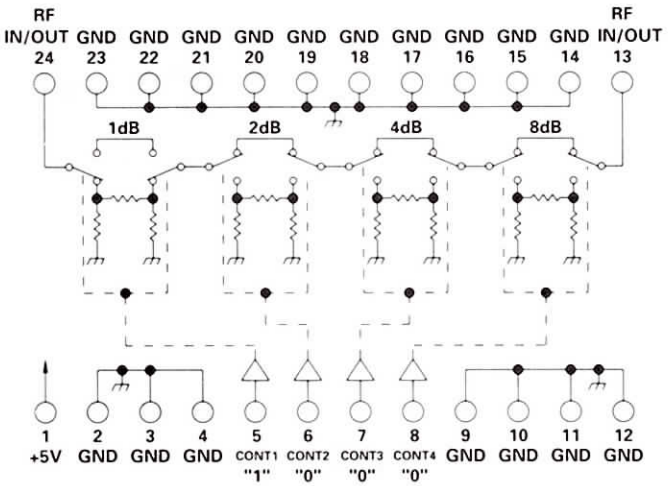

TYPICAL PERFORMANCE

at 25°C

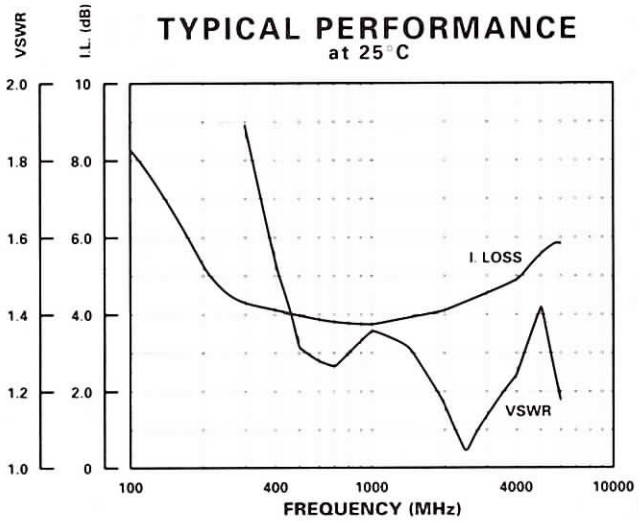

GUARANTEED PERFORMANCE

Parameter		Min	Typ	Max	Units	Conditions
Operating Frequency		1800		4200	MHz	
DC Current			0.8	5.0	mA	At +5 VDC Supply
Control Type			CMOS			4 Line
						Logic "0" = Thru
						Logic "1" = Attenuation
Control Current	*High*		0	±40	µA	2.7 Volts
	Low		0	±40	µA	0.5 Volts
Insertion Loss			5.0	6.0	dB	
Attenuation	*LSB*		1		dB	
	Range	0		15	dB	1, 2, 4, 8
	Accuracy				dB	± (0.25 dB +5% of Atten. Setting in dB)
	Flatness			+0.2	dB	
VSWR			1.3/1	1.7/1		
Impedance			50		OHMS	
Switching Speed			27	50	nSec	50% TTL to 90% / 10% RF 90% / 10% RF
Transition (Rise/Fall) Time			12		nSec	90% / 10% or 10% / 90% RF
Switching (Video) Transients			75		mV	Peak Value
Intercept Points	*2nd*	+65	+70		dBm	1950 / 750 MHz Inputs
	3rd	+38	+43		dBm	975 / 750 MHz Inputs
RF Power	*Operate*		+22	+10	dBm	0.1 dB Compression
	No Damage			+23	dBm	
Operating Temperature		0	+25	+65	°C	TA
Non-Operating Temperature		-34		+95	°C	TA

DAICO Industries

310.507.3242 • FAX 310.507.5701 • www.daico.com

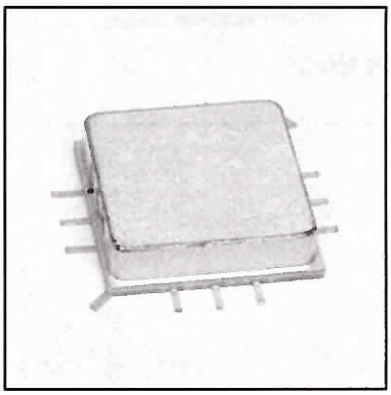

MODEL NUMBER DA0784-1

GaAs 4 Section Attenuator

FEATURES

- 10 - 1000 MHz
- 0.8 mA, +5 VDC
- 1 dB LSB, 15 dB Range
- 20 nSec Switching Speed
- 12 nSec Transition Time
- 48 mV Transients
- TTL Control
- 12 Pin Surface Mount Package
- See DA0984-1 For 12 Pin TO-8 Package

4 BIT

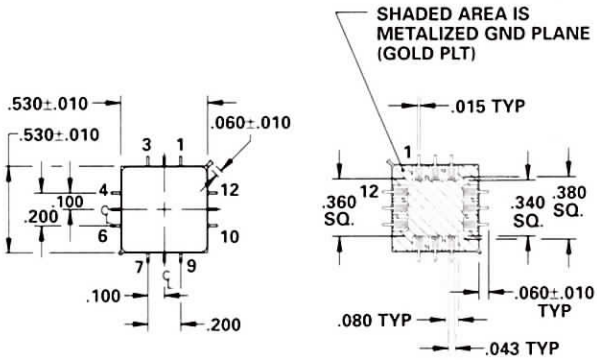

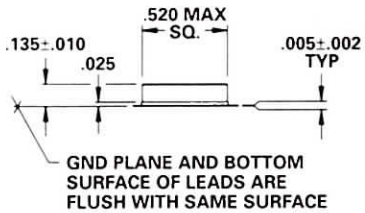

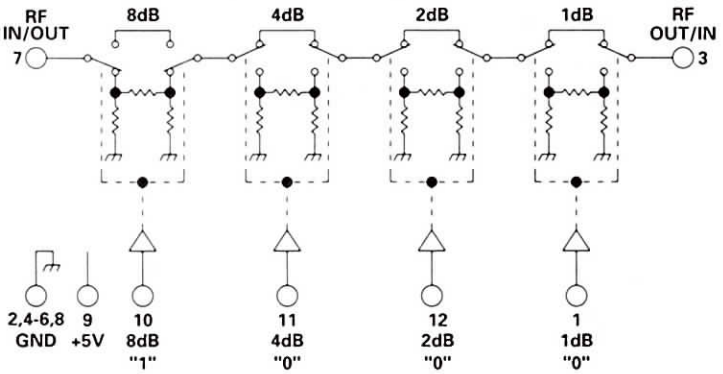

TYPICAL PERFORMANCE

at 25°C

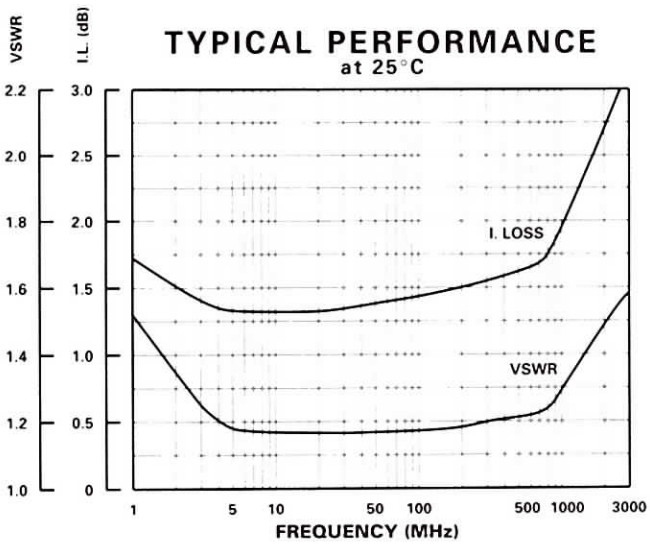

GUARANTEED PERFORMANCE

Parameter		Min	Typ	Max	Units	Conditions
Operating Frequency		10		1000	MHz	
DC Current			0.8	2.0	mA	At +5 VDC Supply
Control Type			TTL			4 Line Logic "0" = Thru Logic "1" = Attenuation
Control Current	*High*		1	±20	µA	VIH = +2.7 Volts
	Low		1	±20	µA	VIL = 0.5 Volts
Insertion Loss			1.9	2.5	dB	MHz
Attenuation	*LSB*		1		dB	
	Range	0		15	dB	1, 2, 4, 8
	Accuracy				dB	+0.15 dB +2% of Atten. Setting in dB -0.35 dB +2% of Atten. Setting in dB
VSWR			1.2/1	1.6/1		
Impedance			50		OHMS	
Switching Speed			20	30	nSec	50% TTL - 90% / 10% RF
Transition (Rise/Fall) Time			12		nSec	90% / 10% or 10% / 90% RF
Switching (Video) Transients			48		mV	Peak Value
Intercept Points	*2nd*		+54		dBm	70 MHz / 50 MHz
	3rd		+38		dBm	35 MHz / 50 MHz
RF Power	*Operate*		+9	+6	dBm	0.1 dB Compression (<50 MHz)
			+14	+10	dBm	0.1 dB Compression (>50 MHz)
	No Damage			+23	dBm	
Operating Temperature		-55	+25	+85	°C	TA

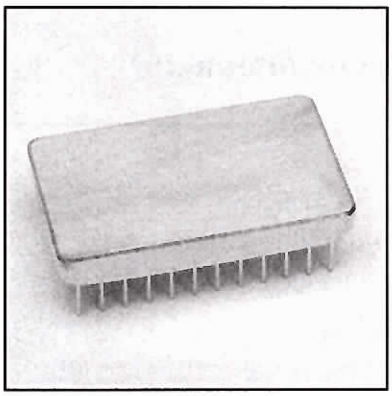

MODEL NUMBER DA0620

Attenuator 5 Section

FEATURES

- 100 - 1900 MHz
- 1 dB LSB, 31 dB Range
- CMOS Control
- 24 Pin DIP

5 BIT

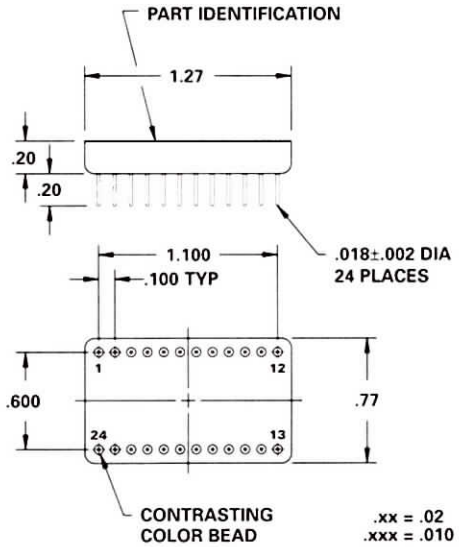

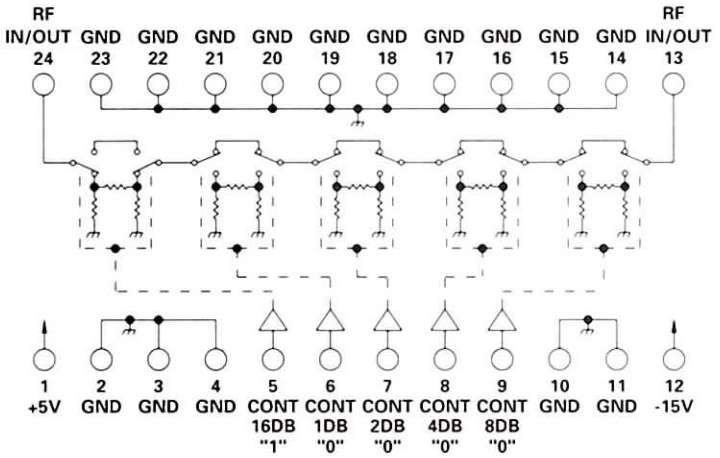

TYPICAL PERFORMANCE

at 25°C

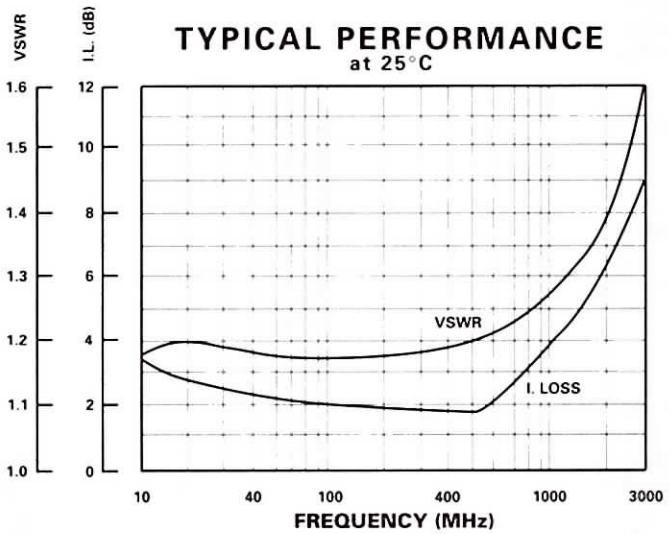

GUARANTEED PERFORMANCE

Parameter		Min	Typ	Max	Units	Conditions
Operating Frequency		100		1900	MHz	
DC Current			72	125	mA	At +5 VDC Supply
			50	75	mA	At -15 VDC Supply
Control Type			CMOS			5 Line
						Logic "0" = Thru
						Logic "1" = Attenuation
Control Current	*High*		0	±1	µA	VIH = +5.0 V
	Low		0	±1	µA	VIL = 0 V
Insertion Loss			5	7	dB	100 - 1000 MHz
			7	10	dB	1000 - 1900 MHz
Attenuation	*LSB*		1		dB	
	Range	0		31	dB	1, 2, 4, 8, 16
	Accuracy					± (0.25 dB ± 3% of Atten.
						Setting in dB)
VSWR			1.25/1	1.5/1		100 - 1000 MHz
			1.4/1	1.7/1		1000 - 1900 MHz
Impedance			50		OHMS	
Switching Speed			2.6	5.0	µSec	50% Control to 90% / 10% RF
Transition (Rise/Fall) Time			2		µSec	90% / 10% or 10% / 90% RF
RF Power	*Operate*		+17	+10	dBm	100 - 500 MHz
			+20	+13	dBm	500 - 1900 MHz
	No Damage			+27	dBm	
Operating Temperature		-55	+25	+125	°C	TA

MODEL NUMBER DA0660

PIN Diode 5 Section Attenuator

FEATURES

- 100 - 1000 MHz
- 12 mA, +5 VDC
- TTL Control
- 24 Pin DIP
- 1 dB LSB, 31 dB Range (for 2 db LSB, 62 dB Range, Order DA0661)

5 BIT

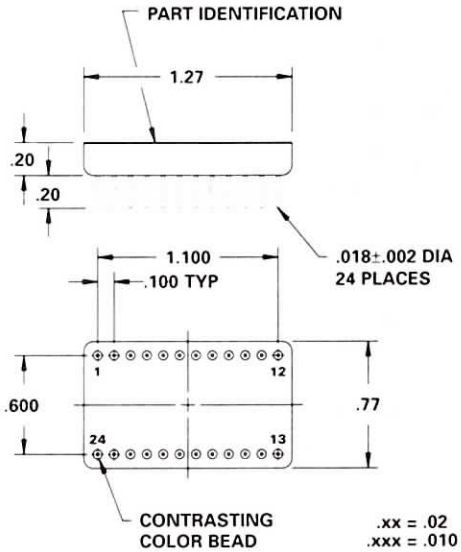

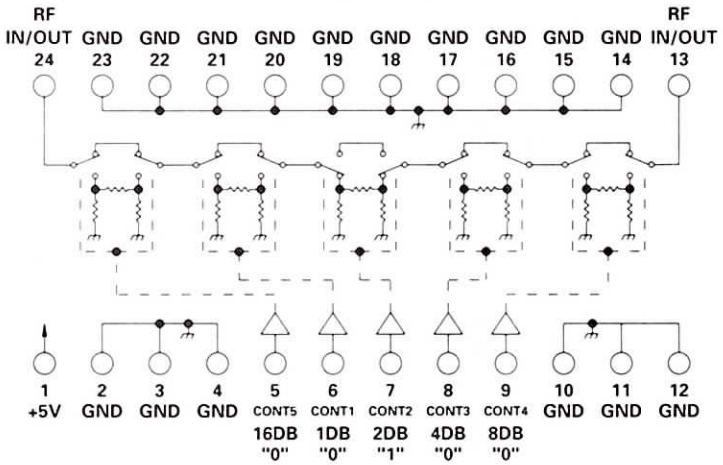

TYPICAL PERFORMANCE
at 25°C

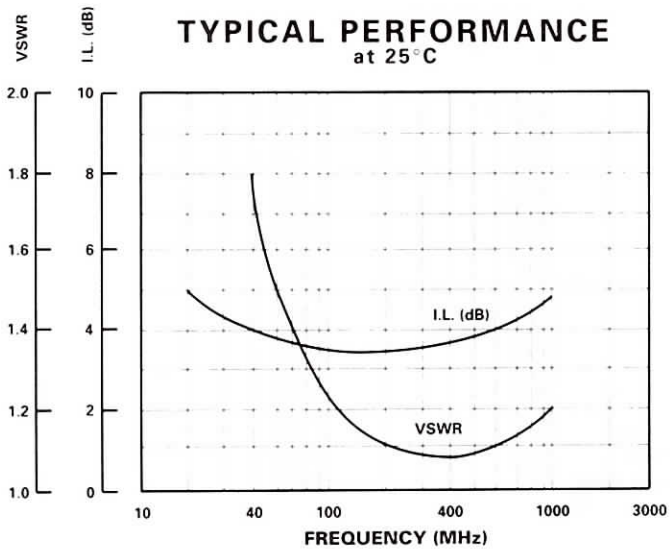

GUARANTEED PERFORMANCE

Parameter		Min	Typ	Max	Units	Conditions
Operating Frequency		100		1000	MHz	
DC Current			12	20	mA	At +5 VDC Supply
Control Type			TTL			5 Line Logic "0" = Thru Logic "1" = Attenuation
Control Current	*High*		0	±10	µA	VIH = +2.7 V
	Low		0	±10	µA	VIL = +0.5 V
Insertion Loss			4.5	5.5	dB	100 - 200 MHz
			5.0	6.0	dB	200 - 1000 MHz
Attenuation	*LSB*		1		dB	
	Range	0		31	dB	1, 2, 4, 8, 16
	Accuracy				dB	± (0.25 dB ± 3% of Atten. Setting in dB)
VSWR			1.3/1	1.55/1		100 - 200 MHz
			1.15/1	1.25/1		200 - 1000 MHz
Impedance			50		OHMS	
Switching Speed			1.5	3.0	µSec	50% TTL to 90% / 10% RF
Transition (Rise/Fall) Time			250	500	nSec	90% / 10% or 10% / 90% RF
Switching (Video) Transients			250	500	mV	Peak Value
Intercept Points	*2nd*		+60		dBm	400 MHz / 210 MHz
	3rd		+33		dBm	200 MHz / 210 MHz
RF Power	*Operate*		+13	+10	dBm	0.1 dB Compression
	No Damage			+20	dBm	
Operating Temperature		-55	+25	+85	C	TA

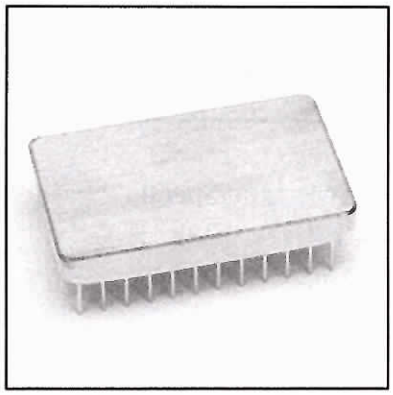

MODEL NUMBER DA0885

GaAs 5 Section Attenuator

FEATURES

- 10 - 1000 MHz
- 1 mA, +5 VDC
- 1 dB LSB, 31 dB Range
- 38 nSec Switching Speed
- 12 nSec Transition Time
- TTL Control
- 24 Pin DIP

5 BIT

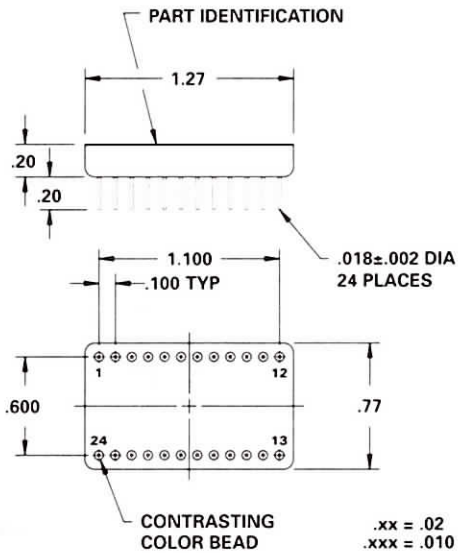

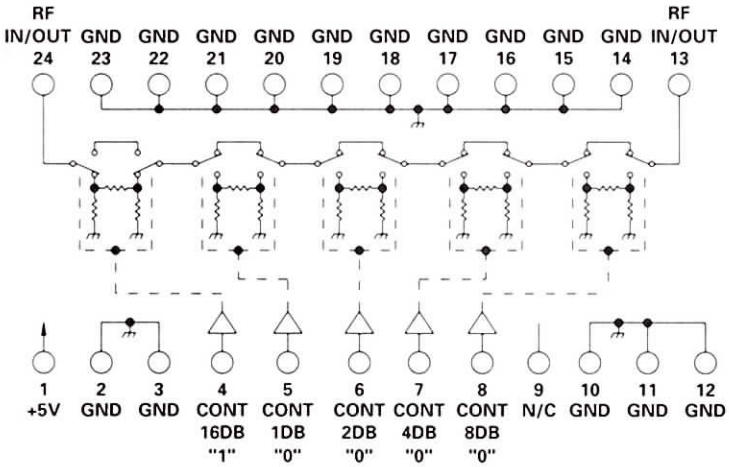

TYPICAL PERFORMANCE
at 25°C

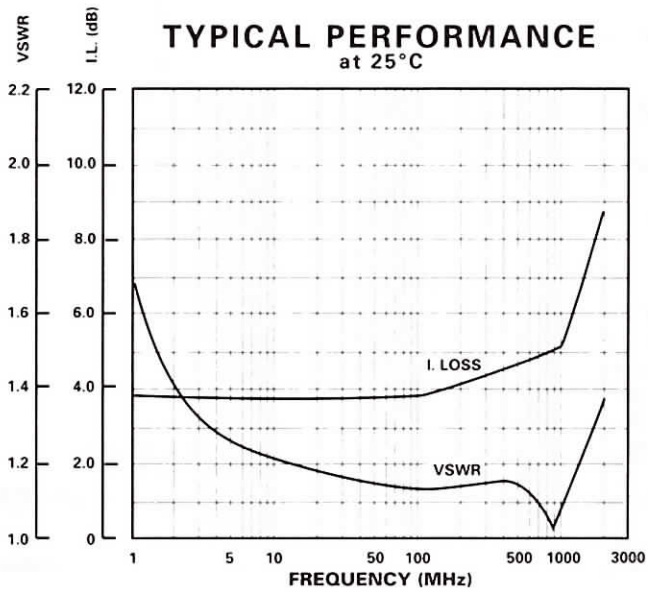

GUARANTEED PERFORMANCE

Parameter		Min	Typ	Max	Units	Conditions
Operating Frequency		10		1000	MHz	
DC Current			1	5	mA	At +5 VDC Supply
Control Type			TTL			5 Line Logic "0" = Thru Logic "1" = Attenuation
Control Current	*High*		0	±40	µA	VIH = +3.0 V
	Low		0	±40	µA	VIL = +0.5 V
Insertion Loss			3.9	5.0	dB	10 - 100 MHz
			5.1	6.5	dB	100 - 1000 MHz
Attenuation	*LSB*		1		dB	
	Range	0		31	dB	1, 2, 4, 8, 16
	Accuracy				dB	± (0.25 dB ± 2% of Atten. Setting in dB)
	Vs. Phase		0.6	±5	DEG	At 240 MHz
VSWR			1.2/1	1.4/1		
Impedance			50		OHMS	
Switching Speed			38	50	nSec	50% TTL to 90% / 10% RF
Transition (Rise/Fall) Time			12		nSec	90% / 10% or 10% / 90% RF
Switching (Video) Transients			130		mV	Peak Value
Intercept Points	*2nd*		+65		dBm	70 MHz / 50 MHz
	3rd		+44		dBm	35 MHz / 50 MHz
RF Power	*Operate*		+13	+10	dBm	0.1 dB Compression
	No Damage			+27	dBm	
Operating Temperature		-55	+25	+125	°C	TA

DAICO *Industries*

310.507.3242 • FAX 310.507.5701 • www.daico.com

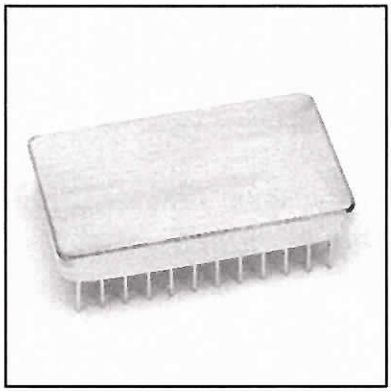

MODEL NUMBER DAT51995

GaAs 5 Section Attenuator

FEATURES

- DC-2000 MHz
- < 1 mA, +5 VDC & -15 VDC
- 1 dB LSB, 31 dB Range
- 4 dB Insertion Loss
- 20 nSec Switching Speed
- TTL Control
- 24 Pin DIP

5 BIT

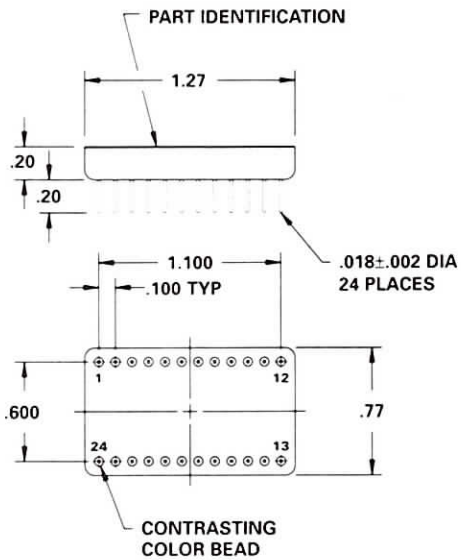

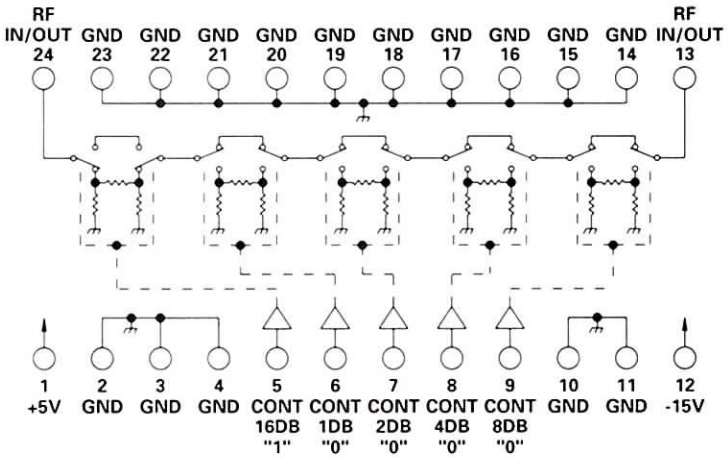

TYPICAL PERFORMANCE
at 25°C

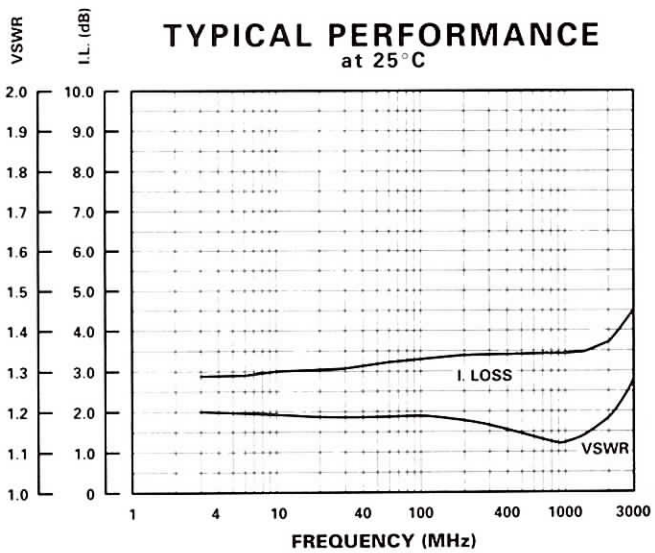

GUARANTEED PERFORMANCE

Parameter		Min	Typ	Max	Units	Conditions
Operating Frequency		DC		2000	MHz	
DC Current			0.1	5	mA	At +5 VDC Supply
			1.0	5	mA	At -15 VDC Supply
Control Type			TTL			5 Line Logic "0" = Thru Logic "1" = Attenuation
Control Current	*High*		1.0	±10	µA	VIH = +2.7 V
	Low		1.0	±10	µA	VIL = +0.5 V
Insertion Loss			3.7	4.5	dB	DC - 1000 MHz
			4.0	6.0	dB	1000 - 2000 MHz
Attenuation	*LSB*		1		dB	
	Range	0		31	dB	1, 2, 4, 8, 16
	Accuracy				dB	± (0.25 dB ± 3% of Atten. Setting in dB)
VSWR			1.2/1	1.5/1		
Impedance			50		OHMS	
Switching Speed			20	50	nSec	50% TTL to 90% / 10% RF
Transition (Rise/Fall) Time			8		nSec	90% / 10% or 10% / 90% RF
Switching (Video) Transients			30		mV	Peak Value
Intercept Points	*2nd*		+72		dBm	214 MHz / 127 MHz
	3rd		+33		dBm	107 MHz / 127 MHz
RF Power	*Operate*		+16	+10	dBm	0.1 dB Compression @ 10 MHz
	No Damage			+23	dBm	
Operating Temperature		-55	+25	+125	°C	TA

MODEL NUMBER DA0659

PIN Diode 5 Section Attenuator

FEATURES

- 30-300 MHz
- 1 dB LSB, 31 dB Range
- Constant Phase
- 2.2 dB Insertion Loss
- +37 dBm 3rd Order Intercept
- TTL Driver
- 38 Pin DIP

5 BIT

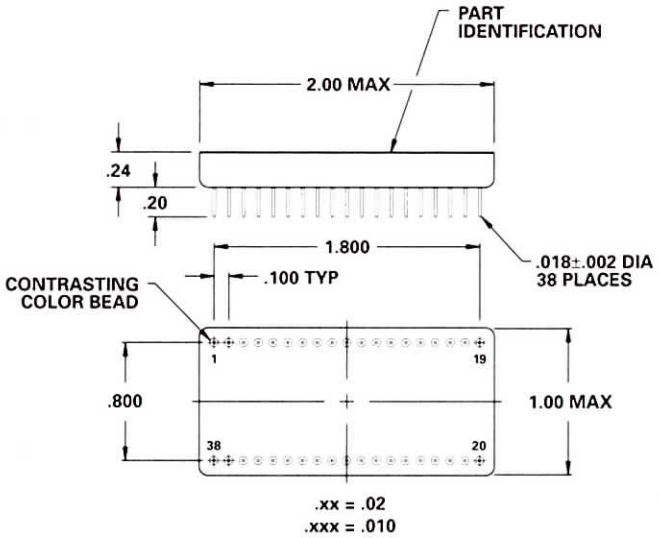

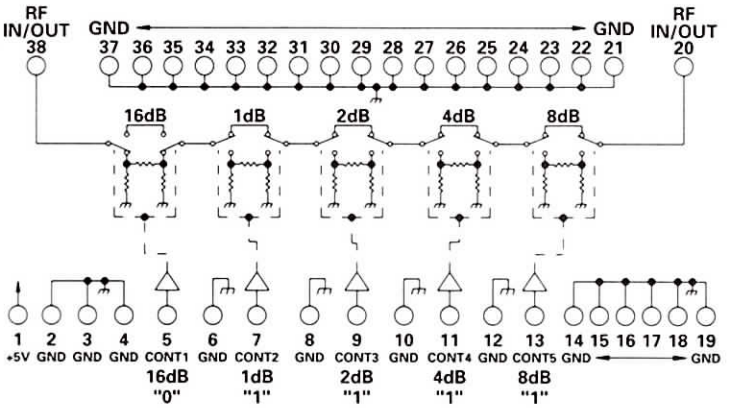

TYPICAL PERFORMANCE
at 25°C

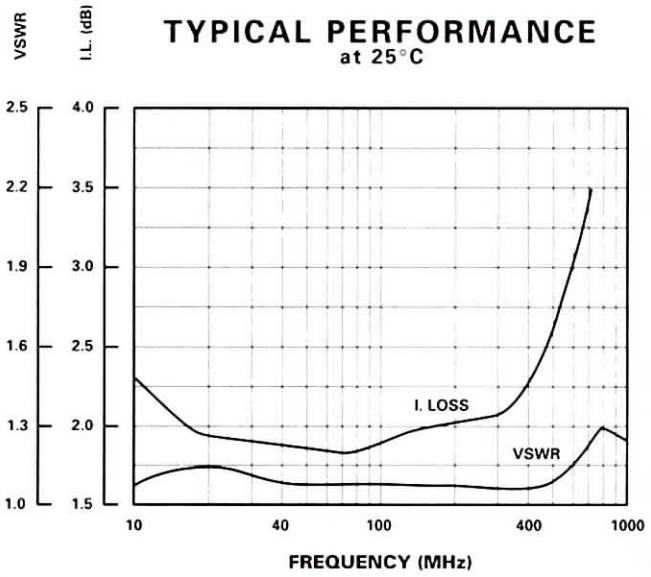

GUARANTEED PERFORMANCE

Parameter		Min	Typ	Max	Units	Conditions
Operating Frequency		30		300	MHz	
DC Current			50	60	mA	At +5 VDC Supply
Control Type			TTL			5 Line Logic "0" = Attenuation Logic "1" = Thru
Control Current	*High*		1.0	±10	µA	VIH = +2.7 V
	Low		1.0	±10	µA	VIL = +0.5 V
Insertion Loss			2.2	3.0	dB	100 - 200 MHz
Attenuation	*LSB*		1		dB	
	Range	0		31	dB	1, 2, 4, 8, 16
	Accuracy				dB	± (0.15 dB ± 2% of Atten. Setting in dB)
Phase Vs. Attenuation				±1.25	DEG	30 - 70 MHz
				±1.88	DEG	70 - 150 MHz
				±2.50	DEG	150 - 200 MHz
				±3.13	DEG	200 - 300 MHz
VSWR			1.1/1	1.22/1		
Impedance			50		OHMS	
Switching Speed			0.6	1	µSec	50% TTL to 90% / 10% RF
Transition (Rise/Fall) Time			90		nSec	90% / 10% or 10% / 90% RF
Switching (Video) Transients			1.0		V	Peak Value
Intercept Points	*2nd*		+70		dBm	34.8 MHz / 52.2 MHz
	3rd		+37		dBm	69.6 MHz / 52.2 MHz
RF Power	*Operate*		+14	+10	dBm	0.1 dB Compression
	No Damage			+27	dBm	
Operating Temperature		-55	+25	+125	°C	TA

DAICO *Industries*

310.507.3242 • FAX 310.507.5701 • www.daico.com

MODEL NUMBER CAT52045

Attenuator 5 Section

FEATURES

- 50-70 MHz
- 1.7 dB Insertion Loss
- 0.5 dB LSB
- Phase Vs. Atten. 0.5 Degrees Typ.

5 BIT

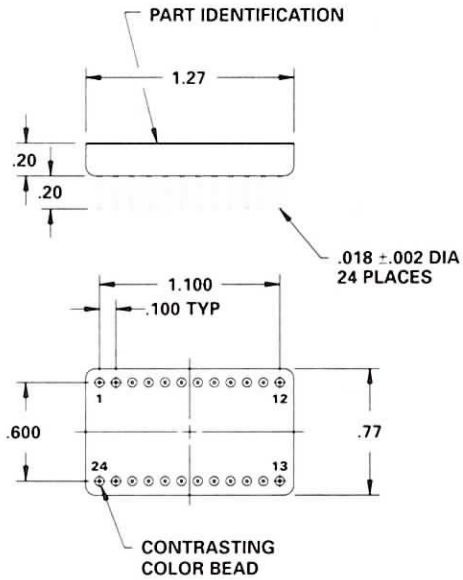

.xx = .02
.xxx = .010

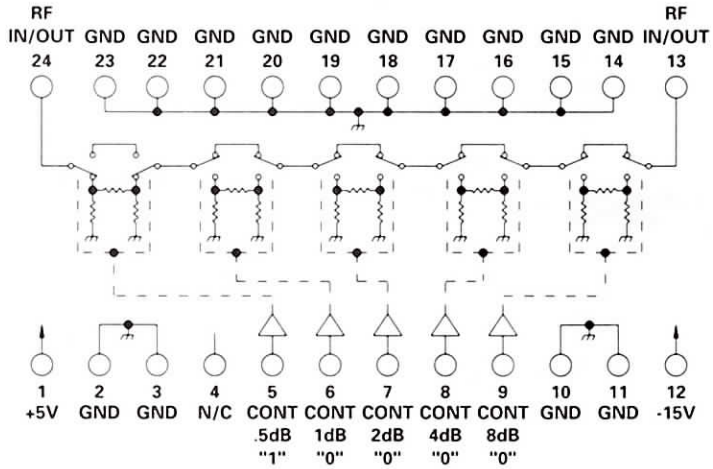

TYPICAL PERFORMANCE
at 25°C

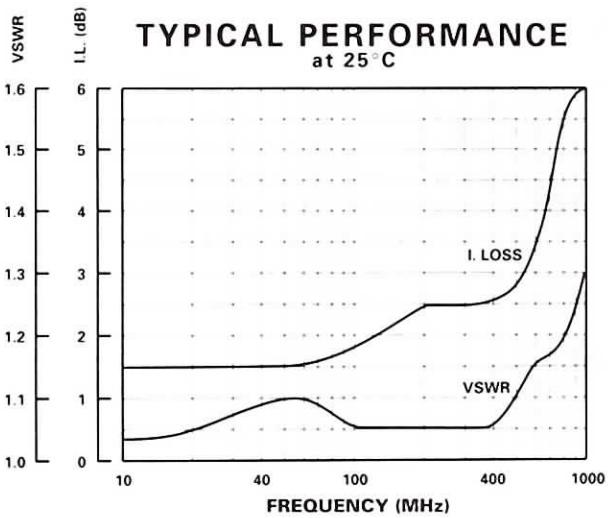

GUARANTEED PERFORMANCE

Parameter		Min	Typ	Max	Units	Conditions
Operating Frequency		50		70	MHz	
DC Current			12	20	mA	At +5 VDC Supply
			26	30	mA	At -15 VDC Supply
Control Type			TTL			5 Line
						Logic "1" = Attenuation
Control Current	*High*		1	±10	µA	VIH = +2.7 V
	Low		1	±10	µA	VIL = +0.5 V
Insertion Loss			1.7	5	dB	
Attenuation	*LSB*			0.5	dB	
	Range	0		15.5	dB	.5, 1, 2, 4, 8
	Accuracy				dB	(±3.0% of the Atten.
						Setting in dB ±5% 0.5, 1 dB)
Phase Vs. Attenuation			+0.48	±2	DEG	Each Bit
			+0.55	±5	DEG	Total
VSWR			1.15/1	1.5/1		
Impedance			50		OHMS	
Switching Speed			70	100	nSec	50% TTL to 90% / 10% RF
Transition (Rise/Fall) Time			8		nSec	10% / 90% or 90% / 10% RF
Switching (Video) Transients			25	75	mV	Peak Value
RF Power	*Operate*		+20	+16	dBm	0.1 dB Comp. @ 60 MHz
	No Damage			+20	dBm	
Operating Temperature		-30	+25	+75	C	TA

MODEL NUMBER DA0757

GaAs 5 Section Attenuator

FEATURES

- 10 - 1000 MHz
- 2 dB LSB, 62 dB Range
- 38 nSec Switching Speed
- 12 nSec Transition Time
- TTL Control
- 24 Pin Surface Mount Version
- See DA0857 for 24 Pin DIP Version

5 BIT

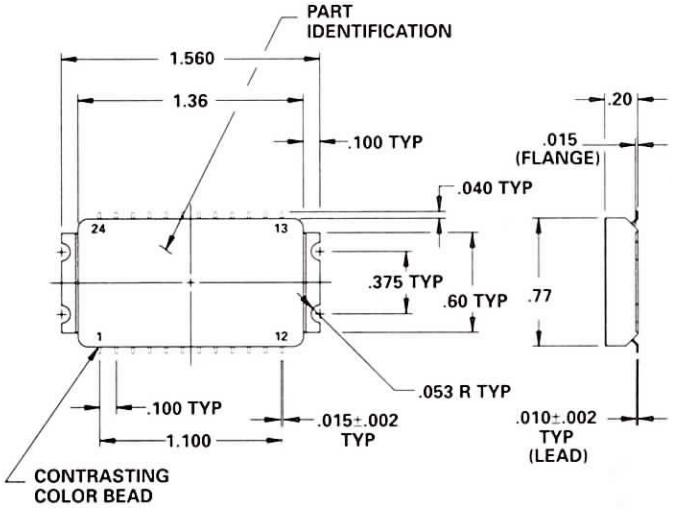

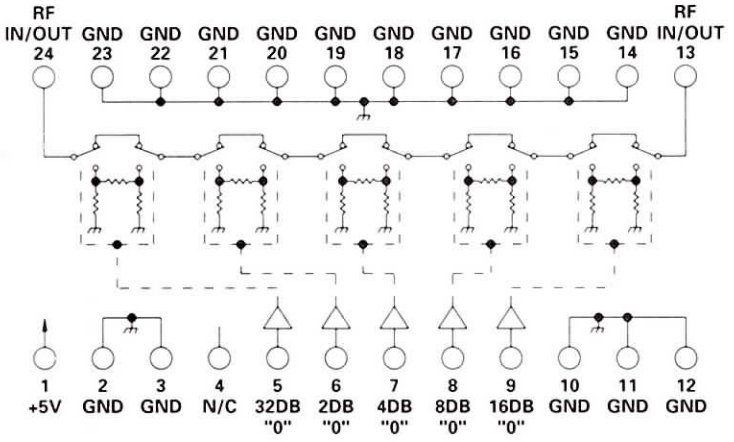

N/C = NO INTERNAL CONNECTION

TYPICAL PERFORMANCE

at 25°C

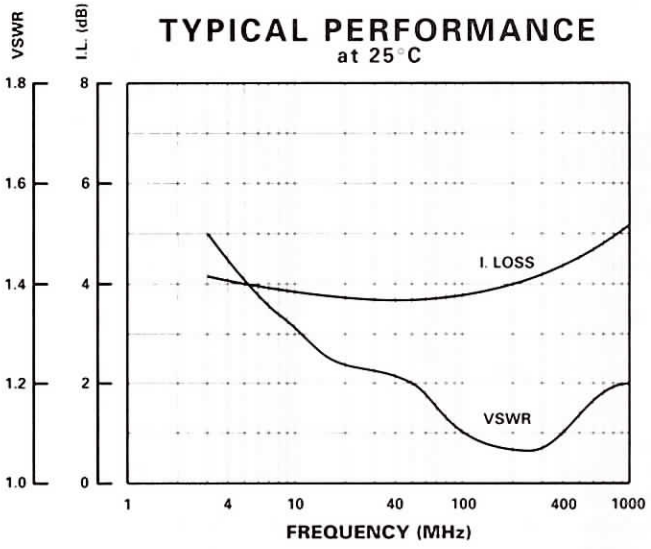

GUARANTEED PERFORMANCE

Parameter		Min	Typ	Max	Units	Conditions
Operating Frequency		10		1000	MHz	
DC Current			1	5	mA	At +5 VDC Supply
Control Type			TTL			5 Line Logic "0" = Thru Logic "1" = Attenuation
Control Current	*High*		1.0	±40	µA	VIH = +3.0 V
	Low		1.0	±40	µA	VIL = +0.5 V
Insertion Loss			4.0	5.2	dB	10 - 100 MHz
			5.6	7.0	dB	100 - 1000 MHz
Attenuation	*LSB*		2		dB	
	Range	0		62	dB	2, 4, 8, 16, 32
	Accuracy				dB	± (0.25 dB ± 2% of Atten. Setting in dB)
VSWR			1.2/1	1.4/1		
Impedance			50		OHMS	
Switching Speed			32	50	nSec	50% TTL - 90% / 10% RF
Transition (Rise/Fall) Time			18		nSec	10% / 90% - 90% / 10% RF
Switching (Video) Transients			215		mV	Peak Value
Intercept Points	*2nd*		+65		dBm	70 MHz / 50 MHz
	3rd		+44		dBm	35 MHz / 50 MHz
RF Power	*Operate*		+13	+10	dBm	0.1 dB Compression
	No Damage			+27	dBm	
Operating Temperature		-55	+25	+125	°C	TA

DAICO *Industries*

310.507.3242 • FAX 310.507.5701 • www.daico.com

MODEL NUMBER DA0760

PIN Diode 5 Section Attenuator

FEATURES

- 100-1000 MHz
- 7 mA, + 5 VDC
- 1 dB LSB, 31 dB Range
- TTL Control
- 24 Pin Surface Mount Package

5 BIT

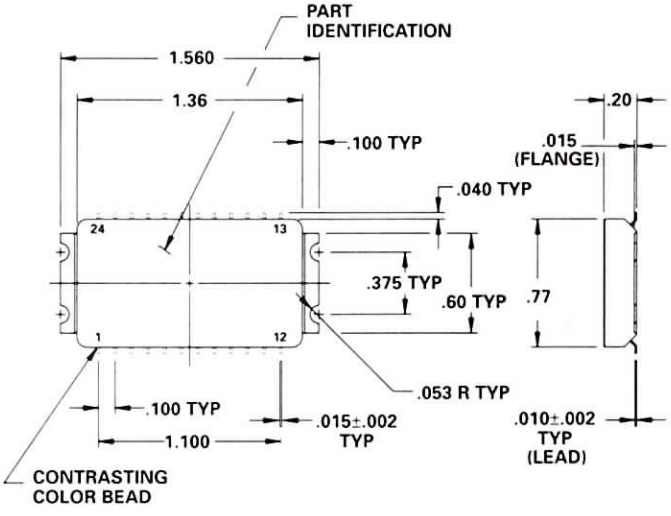

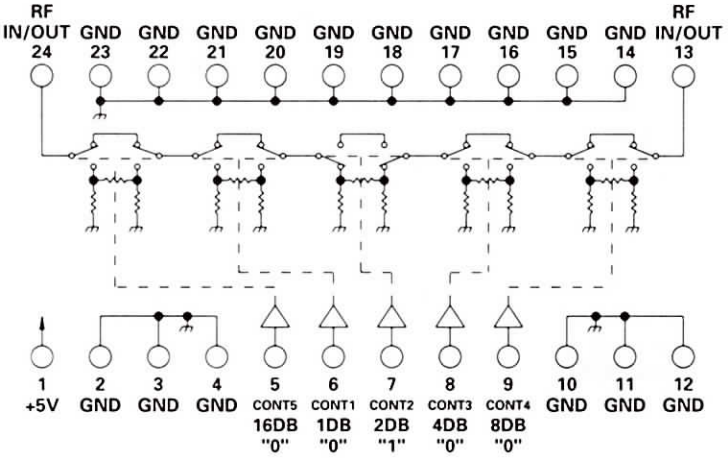

TYPICAL PERFORMANCE

at 25°C

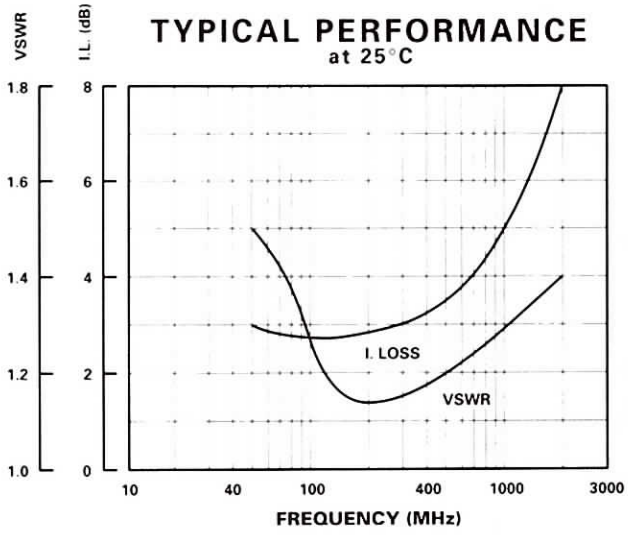

GUARANTEED PERFORMANCE

Parameter		Min	Typ	Max	Units	Conditions
Operating Frequency		100		1000	MHz	
DC Current			7	20	mA	At +5 VDC Supply
Control Current	*High*		1.0	±10	µA	VIH = +2.7 V
	Low		1.0	±10	µA	VIL = +0.5 V
Insertion Loss			4.0	5.0	dB	100 - 500 MHz
			5.0	6.0	dB	500 - 1000 MHz
Attenuation	*LSB*		1		dB	
	Range	0		31	dB	1, 2, 4, 8, 16 dB
	Accuracy				dB	± (0.25 dB ± 3% of Atten. Setting in dB)
VSWR			1.3/1	1.5/1		
Impedance			50		OHMS	
Switching Speed			2	3	µSec	50% TTL to 90% / 10% RF
Transition (Rise/Fall) Time			250	500	nSec	90% / 10% or 10% / 90% RF
Switching (Video) Transients			100	500	mV	Peak Value
Intercept Points	*2nd*		+60		dBm	400 MHz / 190 MHz
	3rd		+33		dBm	300 MHz / 390 MHz
RF Power	*Operate*		+13	+10	dBm	0.1 dB Compression
	No Damage			+27	dBm	
Operating Temperature		-55	+25	+125	°C	TA

DAICO *Industries*

310.507.3242 • FAX 310.507.5701 • www.daico.com

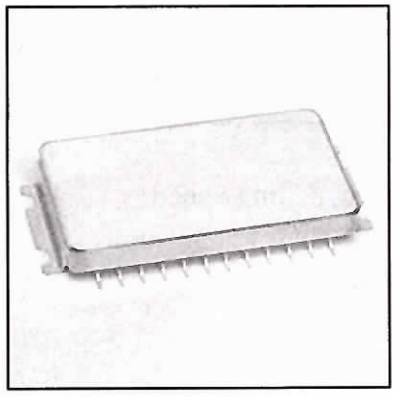

MODEL NUMBER DA0769

PIN Diode 5 Section Attenuator

FEATURES

- 300 - 1000 MHz
- 3.4 dB Insertion Loss
- 200 nSec Switching Speed
- TTL Control
- 24 Pin Surface Mount Package

5 BIT

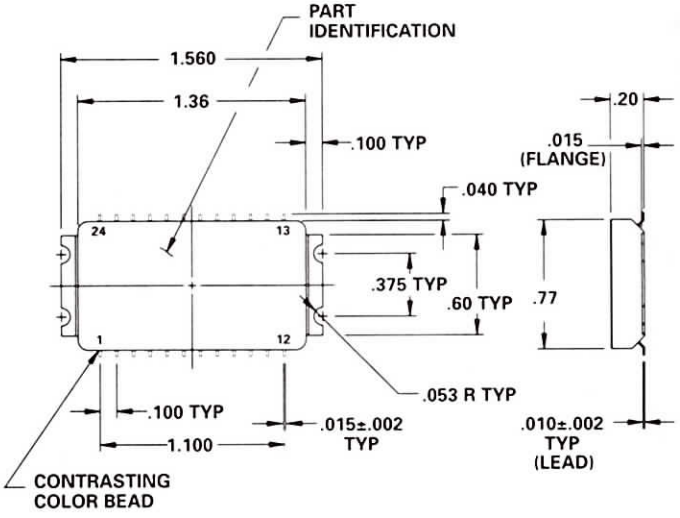

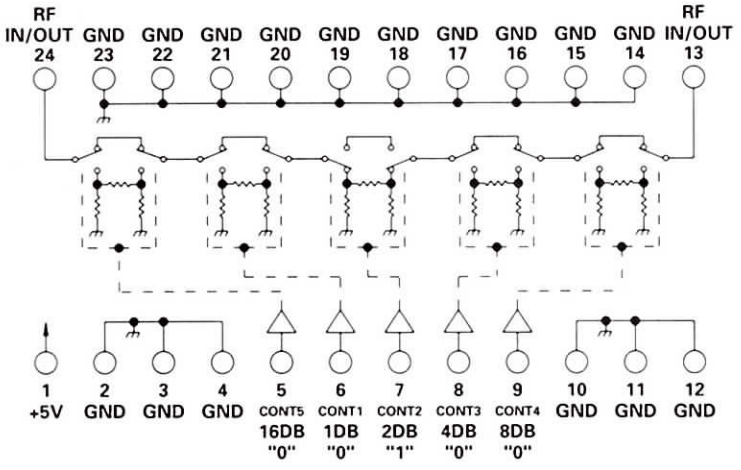

TYPICAL PERFORMANCE

at 25°C

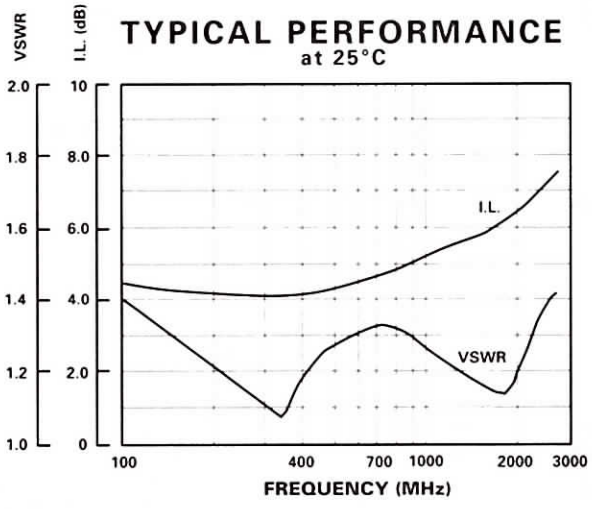

GUARANTEED PERFORMANCE

Parameter		Min	Typ	Max	Units	Conditions
Operating Frequency		300		1000	MHz	
DC Current			15	20	mA	At +5 VDC Supply
Control Type			TTL			5 Line Logic "0" = Thru Logic "1" = Attenuation
Control Current	*High*		1	±20	µA	VIH = +2.7 V
	Low		1	±20	µA	VIL = +0.5 V
Insertion Loss			5.0	6.0	dB	
Attenuation	*LSB*		1		dB	
	Range	0		31	dB	1, 2, 4, 8, 16
	Accuracy				dB	± (0.25 dB + 2% of Atten. Setting in dB)
VSWR			1.3/1	1.5/1		
Impedance			50		OHMS	
Switching Speed			2.5	3.0	µSec	50% TTL to 90% / 10% RF
Transition (Rise/Fall) Time			300		nSec	90% / 10% or 10% / 90% RF
Switching (Video) Transients			110		mV	Peak Value
Intercept Points	*2nd*		+60		dBm	214 MHz / 127 MHz
	3rd		+38		dBm	107 MHz / 127 MHz
RF Power	*Operate*		+13	+10	dBm	0.1 dB Compression
	No Damage			+20	dBm	
Operating Temperature		-55	+25	+85	°C	TA

DAICO *Industries*

310.507.3242 • FAX 310.507.5701 • www.daico.com

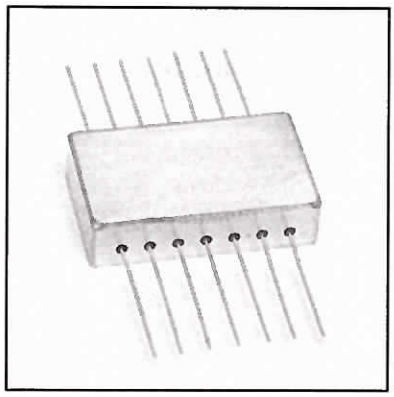

MODEL NUMBER DAT58019

GaAs 5 Section Attenuator

FEATURES

- 10 - 1000 MHz
- 0.7 mA, +5 VDC
- 0.5 dB LSB, 15.5 dB Range
- 1.9 dB Insertion Loss
- 17 nSec Switching Speed
- TTL Control
- 14 Pin Flatpack

5 BIT

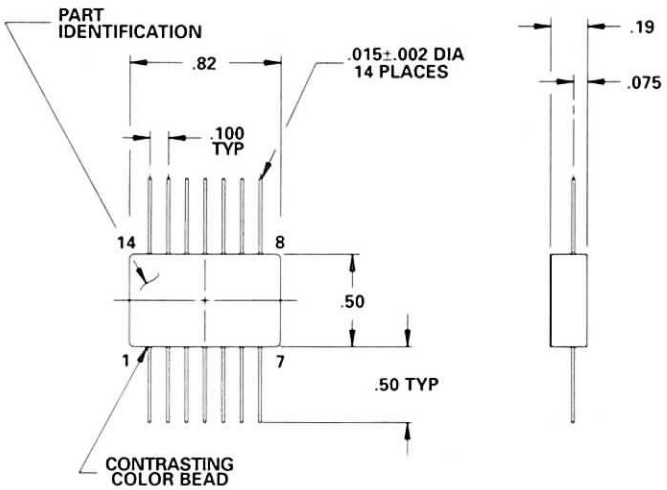

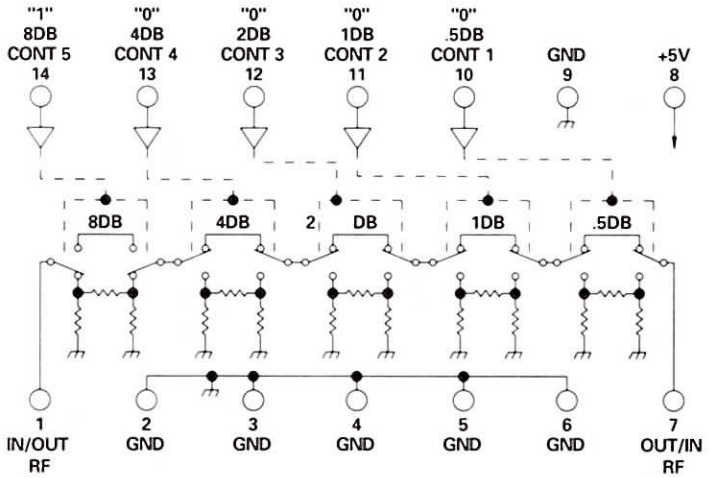

TYPICAL PERFORMANCE

at 25°C

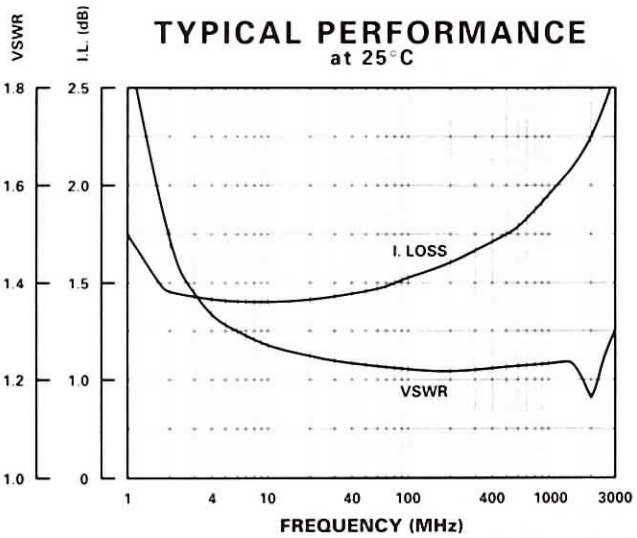

GUARANTEED PERFORMANCE

Parameter		Min	Typ	Max	Units	Conditions
Operating Frequency		10		1000	MHz	
DC Current			0.7	2.0	mA	At +5 VDC Supply
Control Type			TTL			5 Line Logic "0" = Thru Logic "1" = Attenuation
Control Current	*High*		1	±20	µA	VIH = +2.7 V
	Low		1	±20	µA	VIL = +0.5 V
Insertion Loss			1.9	2.5	dB	
Attenuation	*LSB*		0.5		dB	
	Range		15.5		dB	0.5, 1, 2, 4, 8
	Accuracy				dB	± (0.25 dB ± 3% of Atten. Setting in dB)
VSWR			1.4/1	1.6/1		
Impedance			50		OHMS	
Switching Speed			17	30	nSec	50% TTL - 90% / 10% RF
Transition (Rise/Fall) Time			12		nSec	10% / 90% - 90% / 10% RF
Switching (Video) Transients			76		mV	Peak Value
Intercept Points	*2nd*		+60		dBm	70 MHz / 50 MHz
	3rd		+42		dBm	70 MHz / 50 MHz
RF Power	*Operate*		+6.7	+6	dBm	1.0 dB Compression <50 MHz
			+12.7	+10	dBm	1.0 dB Compression >50 MHz
	No Damage			+23	dBm	
Operating Temperature		-55	+25	+85	°C	TA

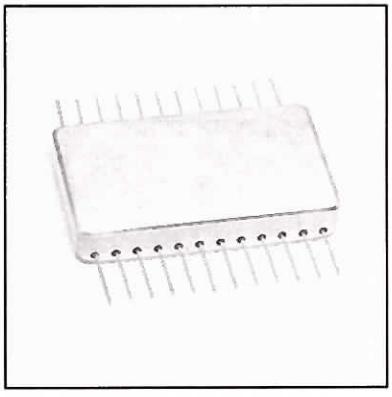

MODEL NUMBER DAT58032

GaAs 5 Section Attenuator

FEATURES

- DC - 500 MHz
- 1 dB LSB, 31 dB Range
- 100 nSec Switching Speed
- 9 mA, +5 VDC
- 14 mA, -12 VDC
- 24 Pin Flatpack
- See DA0953 for 24 Pin DIP

5 BIT

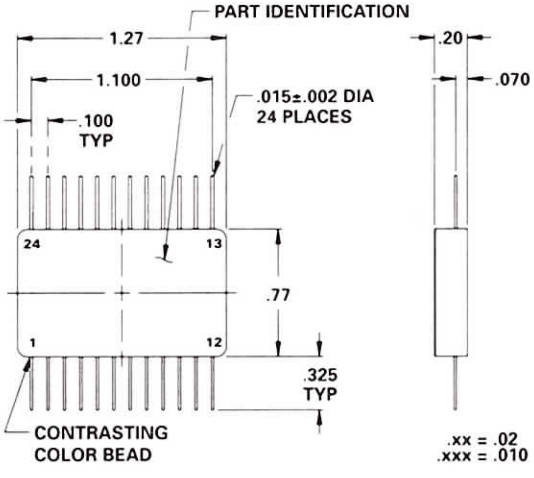

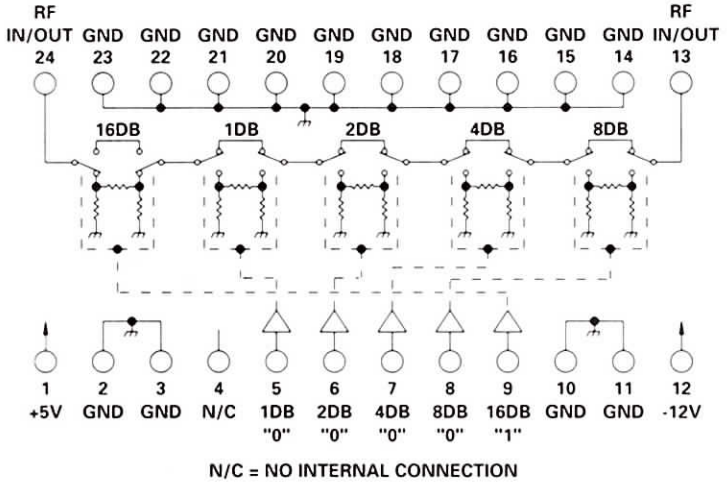

TYPICAL PERFORMANCE
at 25°C

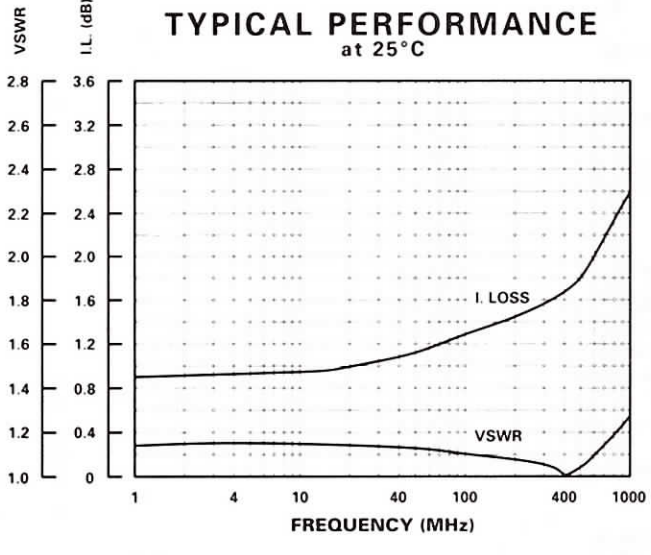

GUARANTEED PERFORMANCE

Parameter		Min	Typ	Max	Units	Conditions
Operating Frequency		DC		500	MHz	
DC Current			9	30	mA	At +5 VDC Supply
			14	25	mA	At -12 VDC Supply
Control Type			TTL			5 Line
						Logic "0" = Thru
						Logic "1" = Attenuation
Control Current	*High*		0	±40	µA	VIH = +2.0 V
	Low		0	±40	µA	VIL = +0.8 V
Insertion Loss			1.8	3.0	dB	
Attenuation	*LSB*		1		dB	
	Range			31	dB	1, 2, 4, 8, 16
	Accuracy			±1	dB	
VSWR			1.4/1	1.6/1		
Impedance			50		OHMS	
Switching Speed			100	200	nSec	50% TTL to 90% / 10% RF
Transition (Rise/Fall) Time			40	100	nSec	90% / 10% or 10% / 90% RF
Switching (Video) Transients				-50	dBm	In Band, any 5 MHz Band
Intercept Points	*3rd*	+30	+45		dBm	35 MHz / 50 MHz
RF Power	*Operate*		+18	+15	dBm	1.0 dB Compression
	No Damage			+30	dBm	
Operating Temperature		-40	+25	+90	°C	TA

DAICO *Industries*

310.507.3242 • FAX 310.507.5701 • www.daico.com

MODEL NUMBER DAT56195	GaAs 5 Section Attenuator

FEATURES

- 1-1200 MHz
- 6 dB LSB, 60 dB Range
- High Intercept Points
- 1.1 dB Insertion Loss
- TTL Control
- SMA Connectors

5 BIT

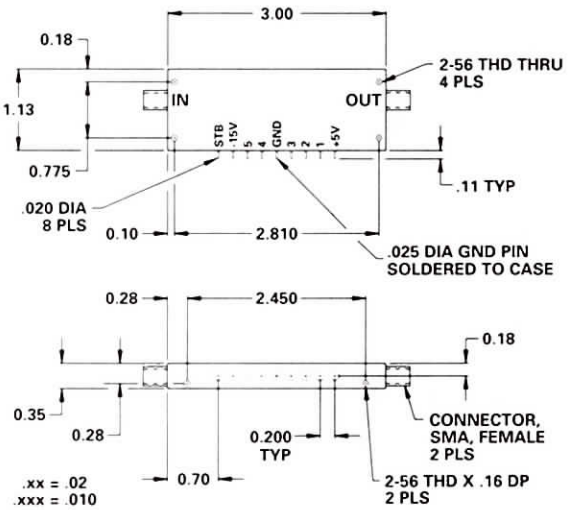

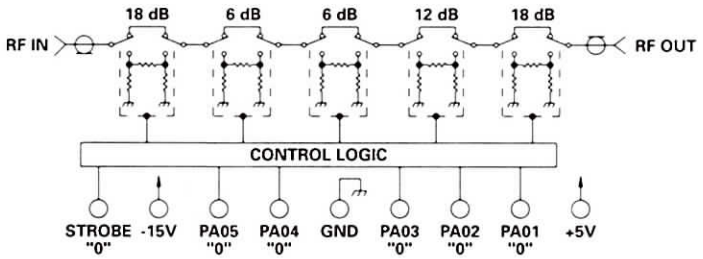

LOGIC TABLE					
PA05	PA04	PA03	PA02	PA01	FUNCTION
0	0	0	0	0	0 dB
0	0	0	0	1	6 dB
0	0	0	1	1	12 dB
0	0	1	0	1	18 dB
0	0	1	1	1	24 dB
0	1	0	1	1	30 dB
0	1	1	0	1	36 dB
0	1	1	1	1	42 dB
1	1	0	1	1	48 dB
1	1	1	0	1	54 dB
1	1	1	1	1	60 dB
x	x	x	x	x	INVALID

TYPICAL PERFORMANCE
at 25°C

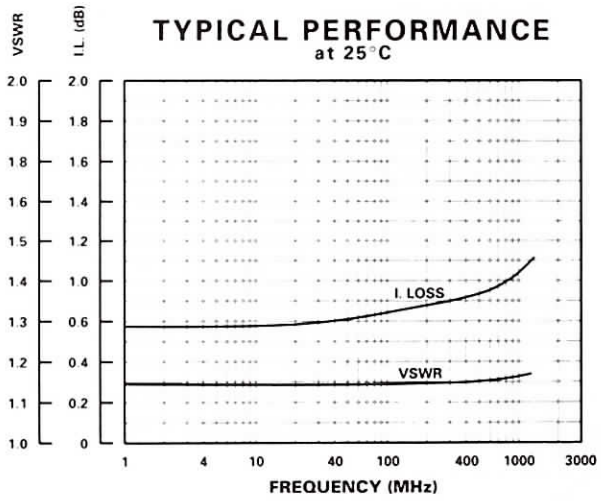

GUARANTEED PERFORMANCE

Parameter		Min	Typ	Max	Units	Conditions
Operating Frequency		1		1200	MHz	
DC Current			37	45	mA	At +5 VDC Supply
			19	25	mA	At -15 VDC Supply
Control Type			TTL			5 Line, Logic: See Table Strobe, Active High, Leading Edge Trigger
Control Current	*High*		±1		µA	VIH = +2.7 V
	Low		±1		µA	VIL = +0.5 V
Insertion Loss			1.1	1.5	dB	
Attenuation	*LSB*	6			dB	
	Range		60		dB	6, 6, 12, 18, 18
	Accuracy (10dB)				dB	±10.4 dB +2% of Atten. Setting in dB
VSWR			1.15/1	1.35/1		
Impedance			50		OHMS	
Switching Speed			3.3	10	µSec	50% TTL - 90% / 10% RF
Transition (Rise/Fall) Time			2		µSec	90% / 10% or 10% / 90% RF
Switching (Video) Transients			-100	-60	dBm	1 - 100 MHz (at 10 Hz Rate)
			-100	-75	dBm	100 - 1200 MHz (at 10 Hz Rate)
Intercept Points	*2nd*	+50	+85		dBm	
	3rd	+33	+39		dBm	
RF Power	*Operate*		+20	+15	dBm	0.1 dB Compression
			+21	+18	dBm	1.0 dB Compression
	No Damage			+30	dBm	
Operating Temperature		0	+25	+75	°C	TA

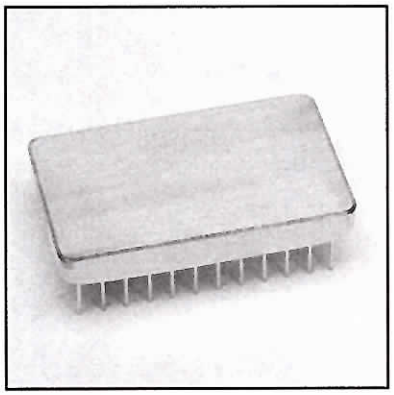

MODEL NUMBER DAT61996

GaAs 6 Section Attenuator

FEATURES

- DC-2000 MHz
- 1 dB LSB, 63 dB Range
- 4.5 dB Insertion Loss
- TTL Control
- 24 Pin DIP

6 BIT

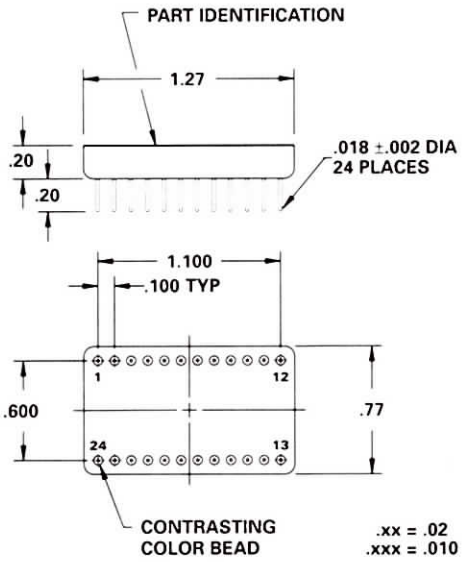

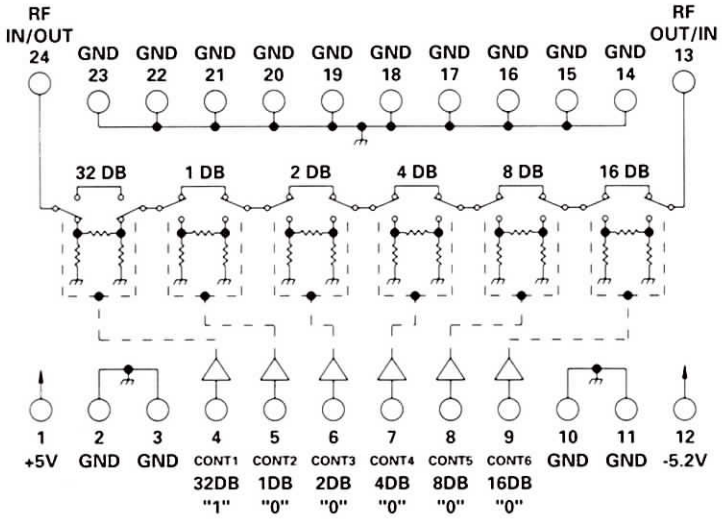

TYPICAL PERFORMANCE
at 25°C

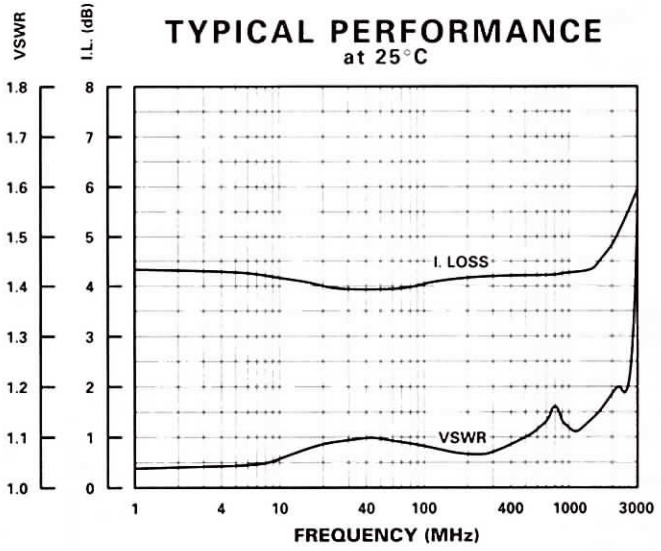

GUARANTEED PERFORMANCE

Parameter		Min	Typ	Max	Units	Conditions
Operating Frequency		DC		2000	MHz	
DC Current			0.4	5	mA	At +5 VDC Supply
			6.5	10	mA	At -5.2 VDC Supply
Control Type			TTL			6 Line Logic "0" = Thru Logic "1" = Attenuation
Control Current	*High*		1.0	±10	µA	VIH = +2.7 V
	Low		1.0	±10	µA	VIL = +0.5 V
Insertion Loss			4.8	6.5	dB	
Attenuation	*LSB*		1		dB	
	Range	0		63	dB	1, 2, 4, 8, 16, 32
	Accuracy				dB	± (0.25 dB +2% of Atten. Setting in dB)
VSWR			1.2/1	1.4/1		
Impedance			50		OHMS	
Switching Speed			140	200	nSec	50% TTL to 90% / 10% RF
Transition (Rise/Fall) Time			10		nSec	90% / 10% or 10% / 90% RF
Switching (Video) Transients			100		mV	Peak Value
Intercept Points	*2nd*		+47		dBm	48 MHz
	3rd		+27		dBm	48 MHz
RF Power	*Operate*		+14	+10	dBm	1.0 dB Compression
	No Damage			+27	dBm	
Operating Temperature		-40	+25	+85	°C	TA

DAICO *Industries*

310.507.3242 • FAX 310.507.5701 • www.daico.com

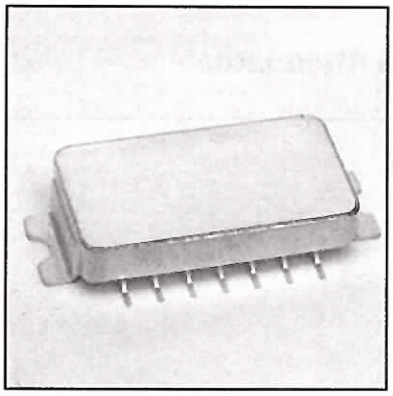

MODEL NUMBER CAT65280

GaAs 6 Section Attenuator

FEATURES

- 400-600 MHz
- Space Application
- Hermetic Package
- Radiation Tolerant, 150 K Rad
- Surface Mount

6 BIT

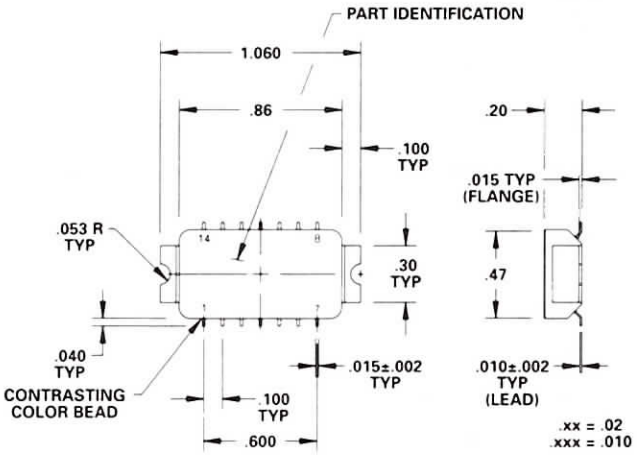

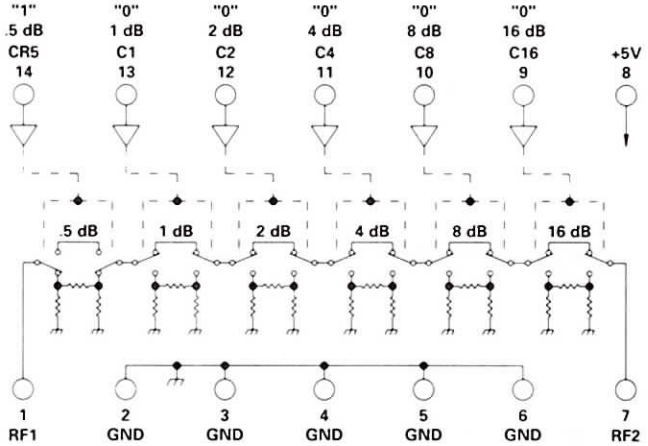

GUARANTEED PERFORMANCE

Parameter		Min	Typ	Max	Units	Conditions
Rad-Hardness			150		KRAD(Si)	
Operating Frequency		400		600	MHz	
DC Current			0.7	2.0	mA	At +5 VDC, +7 DC Supply
Control Type			CMOS			6 Line
						Logic "0" = Thru
						Logic "1" = Attenuation
Control Current	*High*		0.1	±5	µA	3 - 5 Volts
	Low		0.1	±5	µA	0 - 0.5 Volts
Insertion Loss			3.5			dB
Attenuation	*LSB*		0.5		dB	
	Range	0		31.5	dB	0.5, 1, 2, 4, 8, 16
	Accuracy				dB	± (0.15 dB + 3% of Atten. Setting in dB)
						± (0.35 dB + 3% of Atten. Setting in dB)
						for 0 dB to 15.5 dB Attenuation
						± (0.15 dB + 1.5% of Atten. Setting in dB)
						± (0.35 dB + 1.5% of Atten. Setting in dB)
						for 16 dB to 31.5 dB Attenuation
	Monotonicity					Guaranteed
VSWR			1.26/1	1.6/1		
Impedance			50		OHMS	
Switching Speed			16	30	nSec	50% Control Signal
						90% / 10% RF
Transition (Rise/Fall) Time			12		nSec	10% / 90% or 90% / 10% RF
Switching (Video) Transients			84		mV	Peak Value
Intercept Points	*2nd*	+53	+68		dBm	
	3rd	+33	+45		dBm	
RF Power	*Operate*			+13	dBm	1 dB Compression
	No Damage			+23	dBm	
Operating Temperature		-55	+25	+85	°C	TA
Non-Operating Temperature		-34	+25	+125	°C	TA

TYPICAL PERFORMANCE
at 25°C

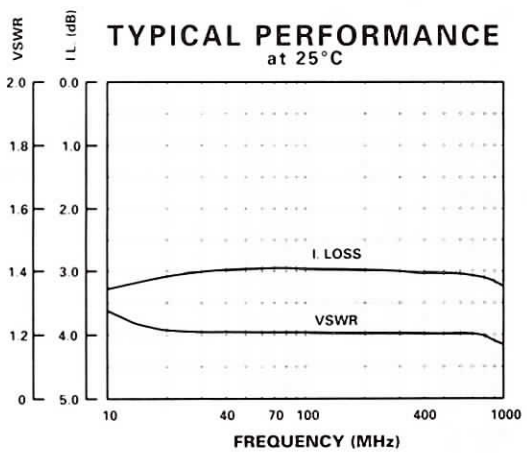

MODEL NUMBER DA0887

GaAs 7 Section Attenuator

FEATURES

- 10-1000 MHz
- 3 mA, +5 VDC
- 17 nSec Transition Time
- 27 nSec Switching Speed
- 0.5 dB LSB, 63.5 dB Range
- 54 mV Transients
- TTL Control
- 38 Pin DIP

7 BIT

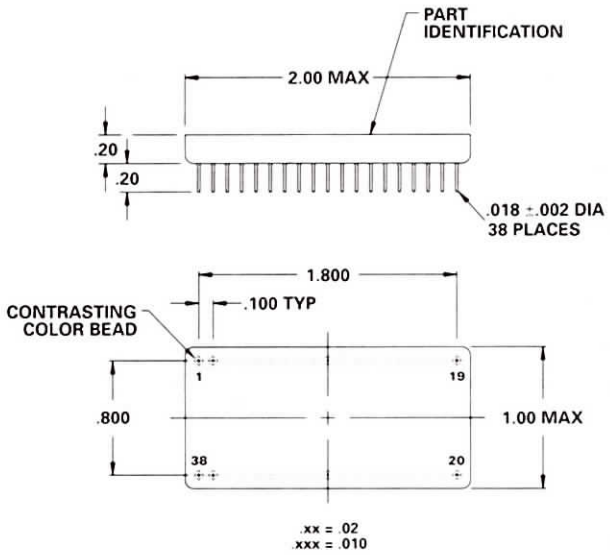

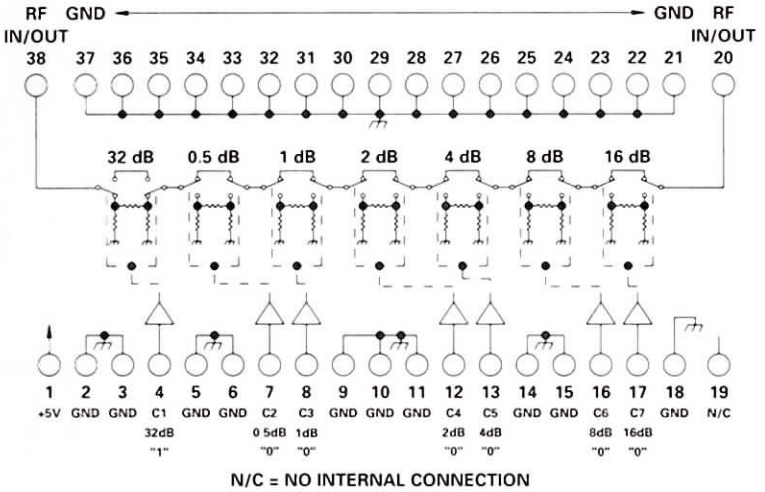

N/C = NO INTERNAL CONNECTION

TYPICAL PERFORMANCE at 25°C

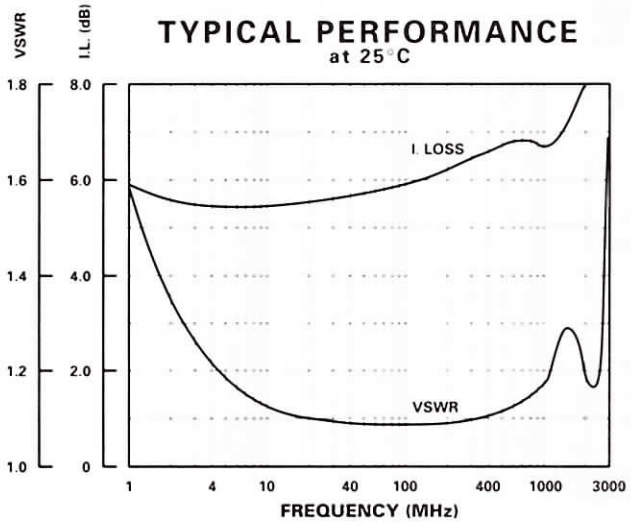

GUARANTEED PERFORMANCE

Parameter		Min	Typ	Max	Units	Conditions
Operating Frequency		10		1000	MHz	
DC Current			3	7	mA	At +5 VDC Supply
Control Type			TTL			7 Line Logic "0" = Thru Logic "1" = Attenuation
Control Current	*High*		0	±20	µA	VIH = +2.7 V
	Low		0	±20	µA	VIL = +0.5 V
Insertion Loss			6.4	8.0	dB	10 - 300 MHz
			6.8	9.0	dB	300 - 1000 MHz
Phase Change			±3	±5	DEG	10 - 500 MHz
Vs. Attenuation			±4	±8	DEG	500 - 1000 MHz (up to 15.5 dB of Atten.)
Attenuation	*LSB*		0.5		dB	
	Range	0		63.5	dB	0.5, 1, 2, 4, 8, 16, 32
	Accuracy				dB	± (0.25 dB +2% of Atten. Setting in dB)
VSWR			1.18/1	1.35/1		
Impedance			50		OHMS	
Switching Speed			27	35	nSec	50% TTL to 90% / 10% RF
Transition (Rise/Fall) Time			17		nSec	90% / 10% or 10% / 90% RF
Switching (Video) Transients			54		mV	
Intercept Points	*2nd*		+65		dBm	70 MHz / 50 MHz
	3rd		+38		dBm	35 MHz / 50 MHz
RF Power	*Operate*		+10	+8	dBm	0.1 dB Comp. 10 - 50 MHz
			+13	+10	dBm	50 - 1000 MHz
	No Damage			+24	dBm	
Operating Temperature		-55	+25	+125	°C	TA

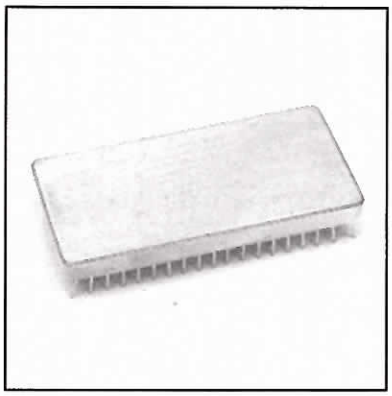

MODEL NUMBER DAT71987

PIN Diode 7 Section Attenuator

FEATURES

- 100-500 MHz
- 14 mA, +5 VDC
- 0.5 dB LSB, 63.5 dB Range
- 4.5 dB Insertion Loss
- CMOS Control
- Constant Phase

7 BIT

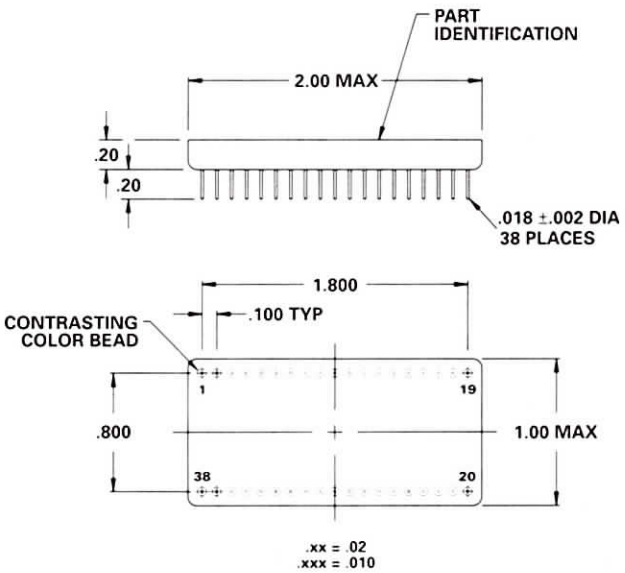

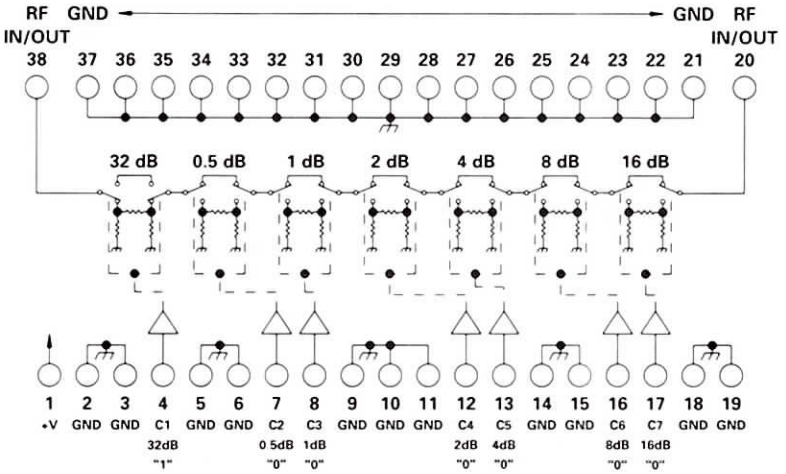

TYPICAL PERFORMANCE

at 25°C

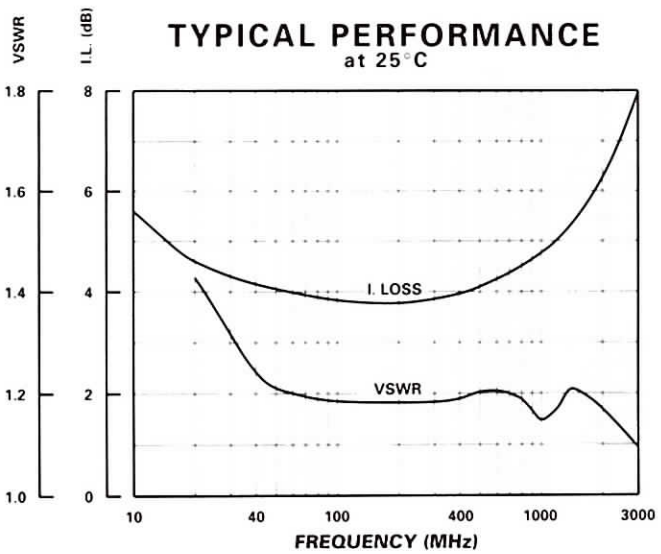

GUARANTEED PERFORMANCE

Parameter		Min	Typ	Max	Units	Conditions
Operating Frequency		100		500	MHz	
DC Current			12	30	mA	At +5 VDC Supply
Control Type			TTL			7 Line Logic "0" = Thru Logic "1" = Attenuation
Control Current	*High*			±10	µA	VIH = +4.5 V
	Low			±10	µA	VIL = +0.5 V
Insertion Loss			4.2	6.0	dB	
Attenuation	*LSB*	0.5			dB	
	Range			63.5	dB	0.5, 1, 2, 4, 8, 16, 32
	Accuracy				dB	± (0.25 dB +2% of Atten. Setting in dB)
	Vs. Phase		±2.5	±10	DEG	
VSWR			1.2/1	1.6/1		
Impedance			50		OHMS	
Switching Speed			4	10	µSec	50% TTL to 90% / 10% RF
Transition (Rise/Fall) Time			1.5		µSec	90% / 10% or 10% / 90% RF
Switching (Video) Transients			500		mV	Peak Value
Intercept Points	*2nd*		+80		dBm	300 / 200 MHz
	3rd		+38		dBm	150 / 200 MHz
RF Power	*Operate*		+12	+10	dBm	0.1 dB Compression
	No Damage			+20	dBm	
Operating Temperature		-55	+25	+125	°C	TA

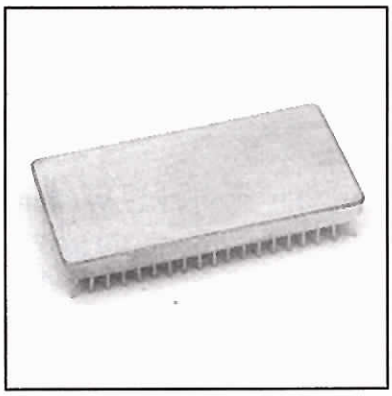

MODEL NUMBER DA0897

GaAs 7 Section Attenuator

FEATURES

- 5- 1200 MHz
- 20 nSec Switching Speed
- 0.5 dB LSB, 63.5 dB Range
- TTL Control
- 38 Pin DIP
- See DA0887 for Single +5V Supply Version

7 BIT

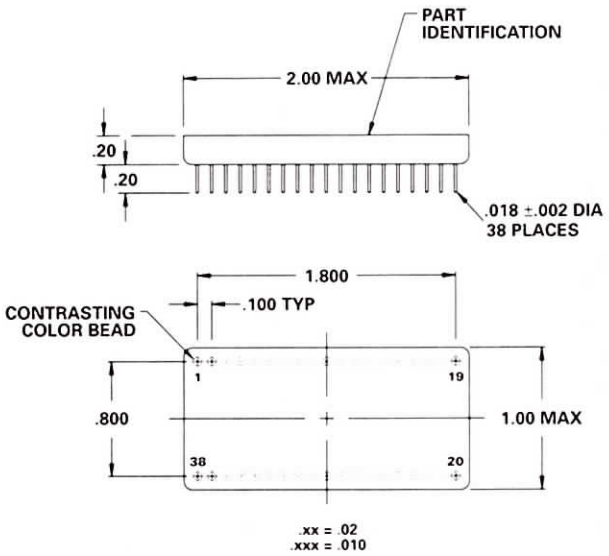

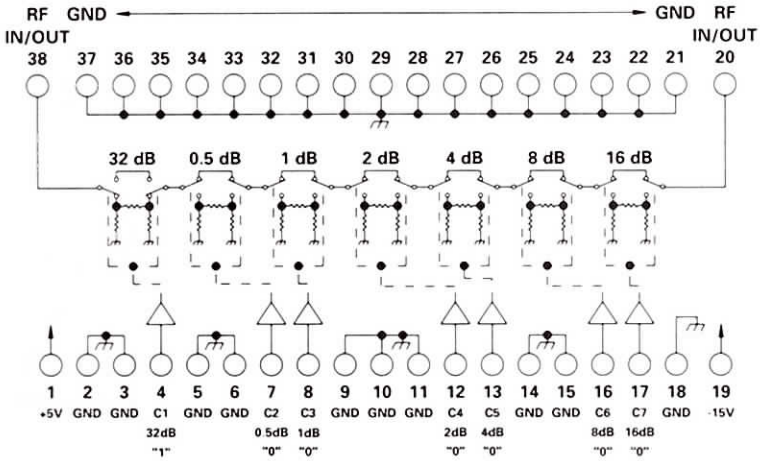

TYPICAL PERFORMANCE

at 25°C

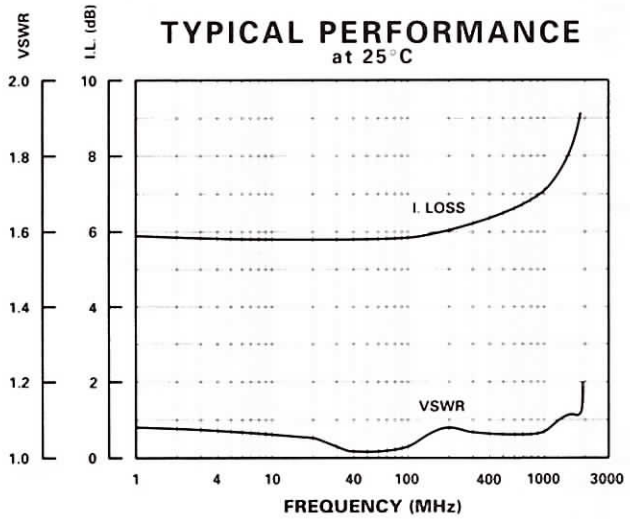

GUARANTEED PERFORMANCE

Parameter		Min	Typ	Max	Units	Conditions
Operating Frequency		5		1200	MHz	
DC Current			15	30	mA	At +5 VDC Supply
			20	35	mA	At -15 VDC Supply
Control Type			TTL			7 Line Logic "0" = Thru Logic "1" = Attenuation
Control Current	*High*		0	±20	µA	VIH = +2.7 V
	Low		0	±20	µA	VIL = +0.5 V
Insertion Loss			7.1	9.0	dB	
Phase Change			+2.6	±5	DEG	DC - 500 MHz
Vs. Attenuation			+4.7	±8	DEG	500 - 1000 MHz (up to 15.5 dB of Atten.)
Attenuation	*LSB*		0.5		dB	
	Range	0		63.5	dB	0.5, 1, 2, 4, 8, 16, 32
	Accuracy				dB	± (0.25 dB +2% of Atten. Setting in dB)
VSWR			1.2/1	1.35/1		
Impedance			50		OHMS	
Switching Speed			60	100	nSec	50% TTL to 90% / 10% RF
Transition (Rise/Fall) Time			20		nSec	90% / 10% or 10% / 90% RF
Switching (Video) Transients			100		mV	Peak Value
Intercept Points	*2nd*		+63		dBm	70 MHz / 50 MHz
	3rd		+43		dBm	70 MHz / 50 MHz
RF Power	*Operate*		+8	+3	dBm	0.1 dB Comp. Below 50 MHz
			+17	+13	dBm	0.1 dB Comp. Above 50 MHz
	No Damage			+24	dBm	
Operating Temperature		-55	+25	+125	°C	TA

DAICO *Industries*

310.507.3242 • FAX 310.507.5701 • www.daico.com

MODEL NUMBER DA0717

Schottky Diode 7 Section Attenuator

FEATURES

- 30-200 MHz
- 25 nSec Switching Speed
- 0.5 dB LSB, 63.5 dB Range
- TTL Control
- See DA0617 for 38 Pin DIP Version
- See 100C1757 for Connectorized Version

7 BIT

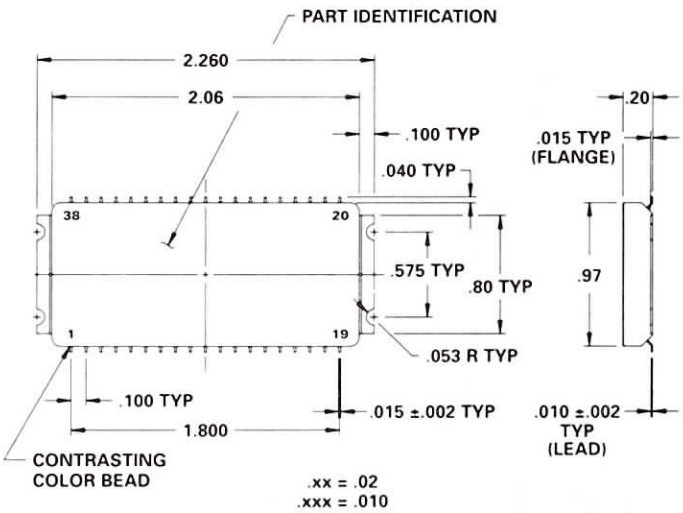

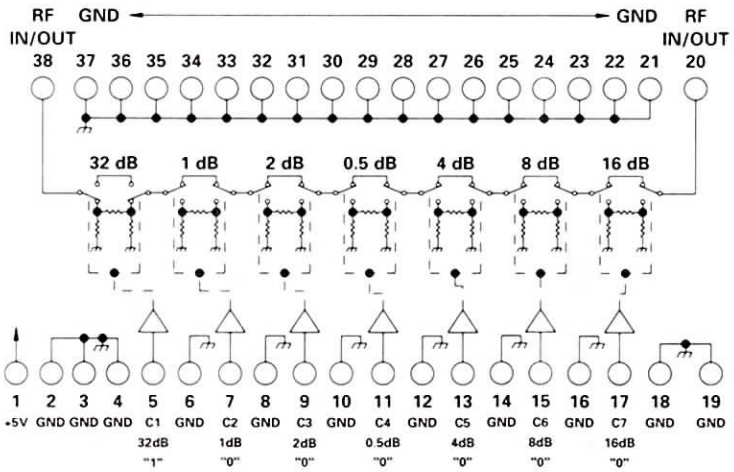

TYPICAL PERFORMANCE
at 25°C

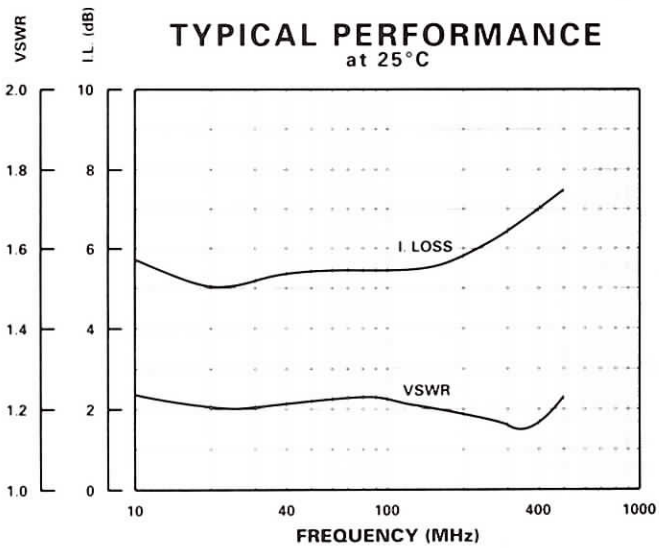

GUARANTEED PERFORMANCE

Parameter		Min	Typ	Max	Units	Conditions
Operating Frequency		30		200	MHz	
DC Current			400	640	mA	At +5 VDC Supply
Control Type			TTL			7 Line Logic "0" = Thru Logic "1" = Attenuation
Control Current	*High*		0	.025	mA	VIH = +2.7 V
	Low		-0.06	-0.20	mA	VIL = +0.5 V
Insertion Loss			5.8	7.0	dB	30 - 150 MHz
			6.1	8.0	dB	150 - 250 MHz
Attenuation	*LSB*		0.5		dB	
	Range	0		63.5	dB	0.5, 1, 2, 4, 8, 16, 32
	Accuracy				dB	0.5 dB ±0.15 dB; 1 dB to 63.5 dB ± (0.2 dB ±3% of Atten. Setting in dB, 50 - 150 MHz) ±(0.2 dB ±5% of Atten. Setting in dB, 30 - 200 MHz)
VSWR			1.22/1	1.35/1		30 - 150 MHz
			1.19/1	1.35/1		30 - 250 MHz
Impedance			50		OHMS	
Switching Speed			25	35	nSec	50% TTL to 90% / 10% RF
Transition (Rise/Fall) Time			7		nSec	90% / 10% or 10% / 90% RF
Switching (Video) Transients			50	150	mV	Peak Value
Intercept Points	*2nd*		+82		dBm	
	3rd		+34		dBm	
RF Power	*Operate*		+13	+10	dBm	0.1 dB Compression
	No Damage			+20	dBm	
Operating Temperature		-54	+25	+85	°C	TA

MODEL NUMBER DA0775

Schottky Diode 7 Section Attenuator

FEATURES

- 30-150 MHz
- 25 nSec Switching Speed
- 4 dB Insertion Loss
- 0.1 dB LSB, 12.7 dB Range
- TTL Control
- 38 Pin Surface Mount Package

7 BIT

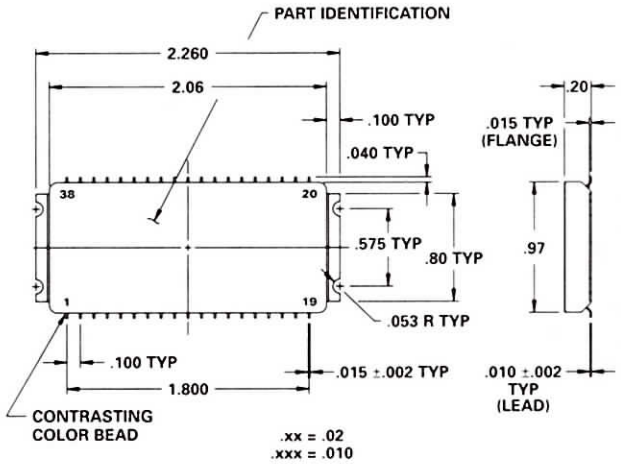

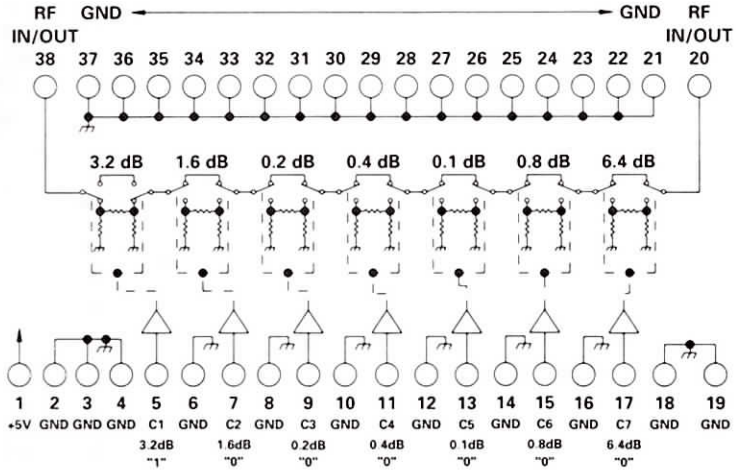

TYPICAL PERFORMANCE
at 25°C

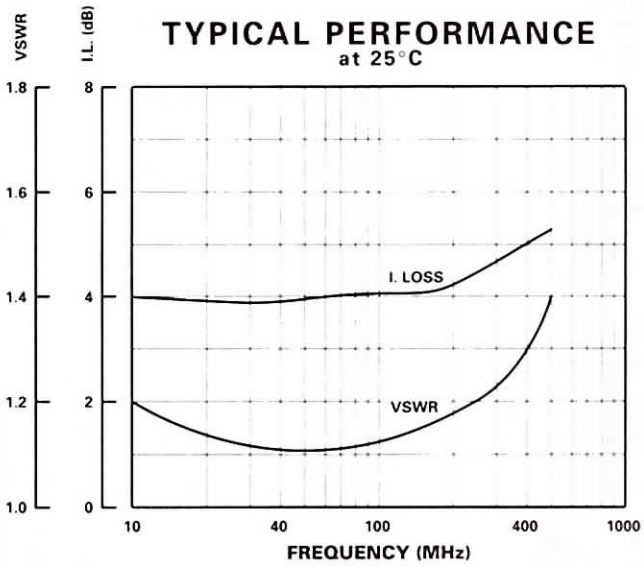

GUARANTEED PERFORMANCE

Parameter		Min	Typ	Max	Units	Conditions
Operating Frequency		30		150	MHz	
DC Current			390	540	mA	At +5 VDC Supply
Control Type			TTL			7 Line Logic "0" = Thru Logic "1" = Attenuation
Control Current	*High*		0	25	µA	VIH = +2.7 V
	Low		-0.06	-200	µA	VIL = +0.5 V
Insertion Loss			4.0	5.0	dB	
Attenuation	*LSB*		0.1		dB	
	Range	0		12.7	dB	0.1, 0.2, 0.4, 0.8, 1.6, 3.2, 6.4
	Accuracy				dB	0.1 dB to 0.9 dB: ± (0.05 dB +15% of Atten. Setting in dB) 1.0 dB to 12.7 dB: ±(0.15 dB +2% of Atten. Setting in dB)
VSWR			1.15/1	1.35/1		
Impedance			50		OHMS	
Switching Speed			25	35	nSec	50% TTL to 90% / 10% RF
Transition (Rise/Fall) Time			7		nSec	90% / 10% or 10% / 90% RF
Switching (Video) Transients				500	mV	Peak Value
Intercept Points	*2nd*		93		dBm	40 MHz / 30 MHz
	3rd		36		dBm	55 MHz / 40 MHz
RF Power	*Operate*		+15	+10	dBm	0.1 dB Compression
	No Damage			+20	dBm	
Operating Temperature		-55	+25	+85	C	TA

MODEL NUMBER DA0795

PIN Diode 7 Section Attenuator

FEATURES

- 30-500 MHz
- 0.5 dB LSB, 63.5 dB Range
- TTL Control
- 38 Pin Surface Mount Package
- See DA0295 for 38 Pin DIP Version
- See 100C1595 for Connectorized Version

7 BIT

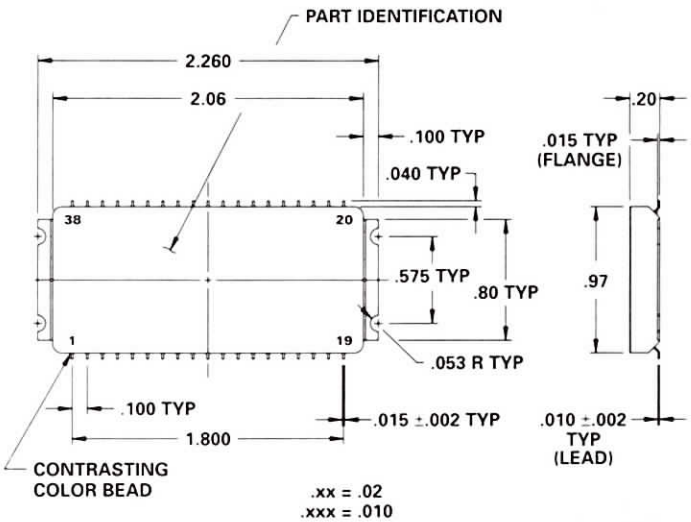

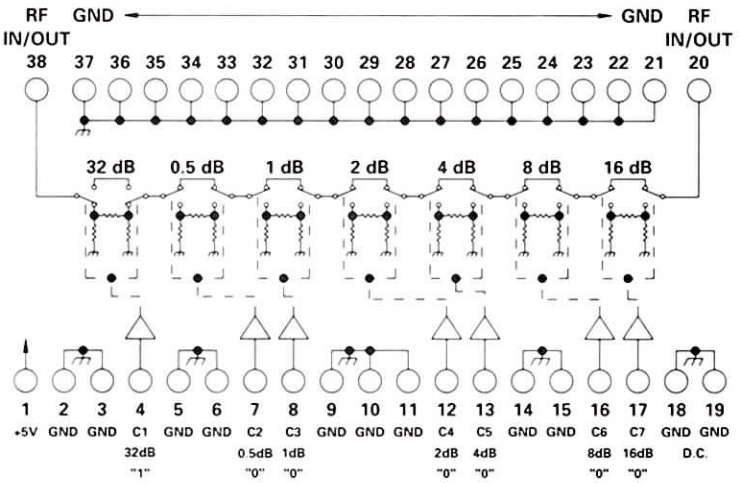

GUARANTEED PERFORMANCE

Parameter		Min	Typ	Max	Units	Conditions
Operating Frequency		30		500	MHz	
DC Current			51	85	mA	At +5 VDC Supply
Control Type			TTL			7 Line Logic "0" = Thru Logic "1" = Attenuation
Control Current	*High*		0	40	µA	VIH = +2.7 V
	Low		-260	-400	µA	VIL = +0.5 V
Insertion Loss			4.5	6.0	dB	
Attenuation	*LSB*		0.5		dB	
	Range	0		63.5	dB	0.5, 1, 2, 4, 8, 16, 32
	Accuracy				dB	± (0.15 dB +2% of Atten. Setting in dB)
VSWR			1.2/1	1.35/1		
Impedance			50		OHMS	
Switching Speed			7.8	20	µSec	50% TTL to 90% / 10% RF
Transition (Rise/Fall) Time			1.6		µSec	90% / 10% or 10% / 90% RF
Switching (Video) Transients			88		mV	Peak Value
Intercept Points	*2nd*		+78		dBm	38.4 MHz / 52.2 MHz
	3rd		+36		dBm	69.6 MHz / 52.2 MHz
RF Power	*Operate*		+12	+10	dBm	0.1 dB Compression
	No Damage			+20	dBm	
Operating Temperature		-55	+25	+125	°C	TA

TYPICAL PERFORMANCE
at 25°C

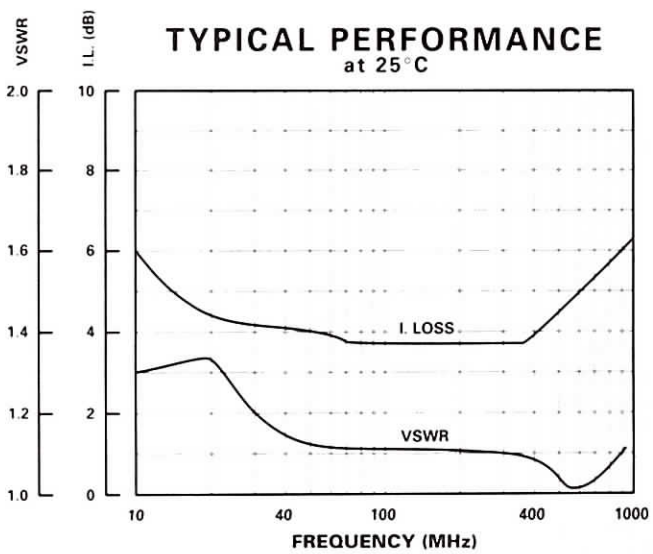

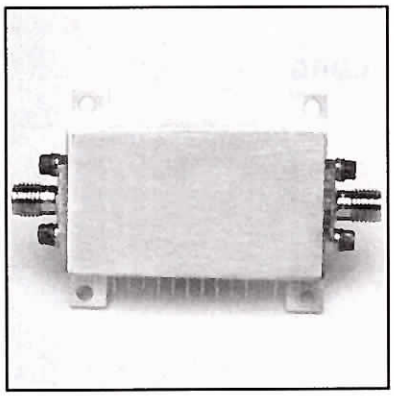

MODEL NUMBER CDA0867

GaAs 7 Section Attenuator

FEATURES

- 10 - 1000 MHz
- 3 mA, +5 VDC
- 17 nSec Transition Time
- 27 nSec Switching Speed
- 0.5 dB LSB, 63.5 dB Range
- See DA0887 for 38 Pin DIP Version
- Replaceable SMA Connectors
- 54 mV Transients
- TTL Control

7 BIT

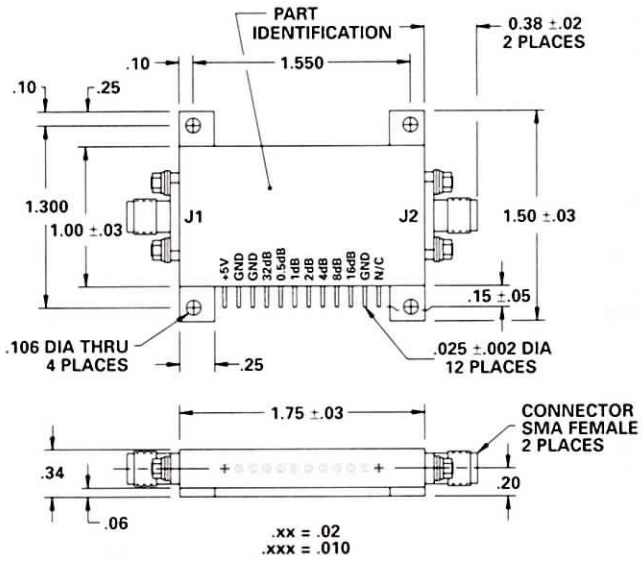

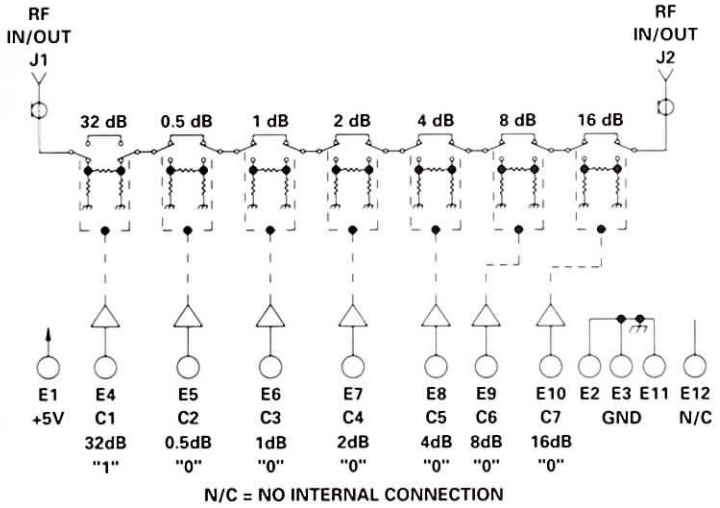

TYPICAL PERFORMANCE

at 25°C

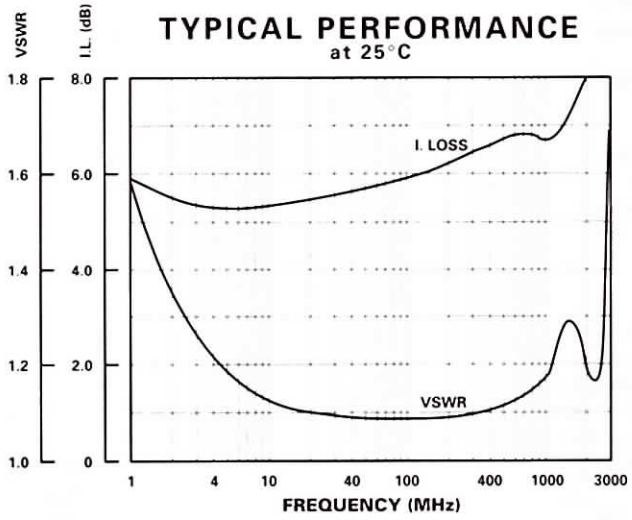

GUARANTEED PERFORMANCE

Parameter		Min	Typ	Max	Units	Conditions
Operating Frequency		10		1000	MHz	
DC Current			3	7	mA	At +5 VDC Supply
Control Type			TTL			7 Line Logic "0" = Thru Logic "1" = Attenuation
Control Current	*High*		0	±20	µA	VIH = +2.7 V
	Low		0	±20	µA	VIL = +0.5 V
Insertion Loss			6.4	8.0	dB	10 - 300 MHz
			6.8	9.0	dB	300 - 1000 MHz
Phase Change			±3	±5	DEG	10 - 500 MHz
Vs. Attenuation			±4	±8	DEG	500 - 1000 MHz (up to 15.5 dB of Atten.)
Attenuation	*LSB*		0.5		dB	
	Range	0		63.5	dB	0.5, 1, 2, 4, 8, 16, 32
	Accuracy				dB	± (0.25 dB +2% of Atten. Setting in dB)
VSWR			1.18/1	1.35/1		
Impedance			50		OHMS	
Switching Speed			27	35	nSec	50% TTL to 90% / 10% RF
Transition (Rise/Fall) Time			17		nSec	90% / 10% or 10% / 90% RF
Switching (Video) Transients			54		mV	Peak Value
Intercept Points	*2nd*		+65		dBm	70 MHz / 50 MHz
	3rd		+38		dBm	35 MHz / 50 MHz
RF Power	*Operate*		+10	+8	dBm	0.1 dB Comp. 10 - 50 MHz
			+13	+10	dBm	50 - 1000 MHz
	No Damage			+24	dBm	
Operating Temperature		-55	+25	+125	°C	TA

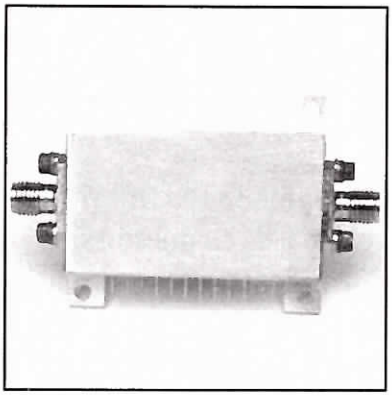

MODEL NUMBER DAT76199

Attenuator 7 Section

FEATURES

- 300-1000 MHz
- Highest Attenuation 127 dB
- Fast Speed, 100 nSec
- Medium Power, +18 dBm Operate

7 BIT

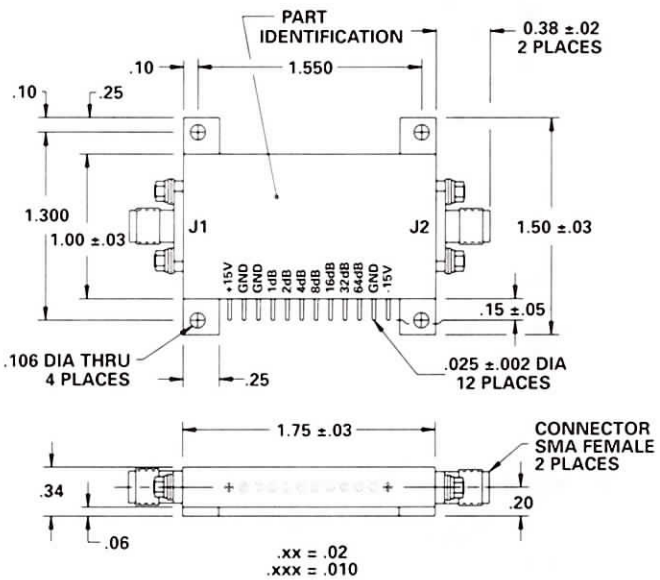

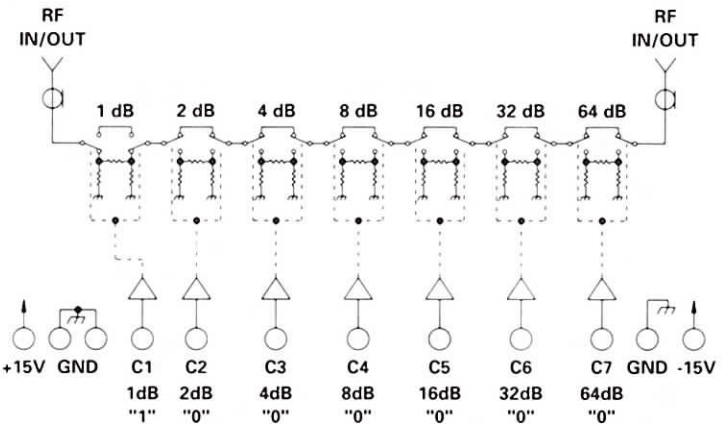

TYPICAL PERFORMANCE
at 25°C

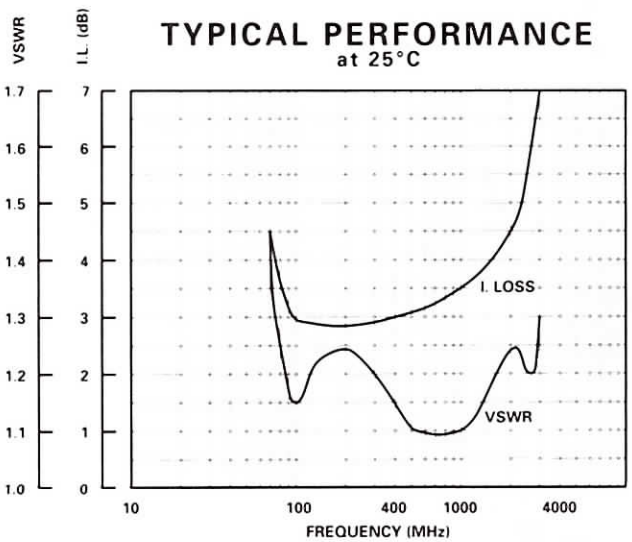

GUARANTEED PERFORMANCE

Parameter		Min	Typ	Max	Units	Conditions
Operating Frequency		300		1000	MHz	
DC Current			12.7	35	mA	At +15 VDC Supply
			2.0	50	mA	At -15 VDC Supply
Control Type			TTL			7 Line
						Logic "0" = Thru
						Logic "1" = Attenuation
Control Current	*High*		±10	±100	µA	VIH = +2.7 V
	Low		±10	±100	µA	VIL = +0.5 V
Insertion Loss			3.5	4.5	dB	
Attenuation	*LSB*		1		dB	
	Range	0		127	dB	1, 2, 4, 8, 16, 32, 64
	Accuracy				dB	±2% of Attenuation
	@ 700 MHz					Setting in dB
VSWR			1.25/1	1.5/1		
Impedance			50		OHMS	
Switching Speed			60	100	nSec	50% TTL to 90% / 10% RF
Transition (Rise/Fall) Time			22		nSec	90% / 10% or 10% / 90% RF
Switching (Video) Transients			42	100	mV	Peak Value
Intercept Points	*2nd*		+68		dBm	350 MHz / 400 MHz
	3rd		+39		dBm	575 MHz / 400 MHz
RF Power	*Operate*		+21	+18	dBm	0.1 dB Compression
	No Damage			+27	dBm	
Operating Temperature		-55	+25	+125	°C	TA

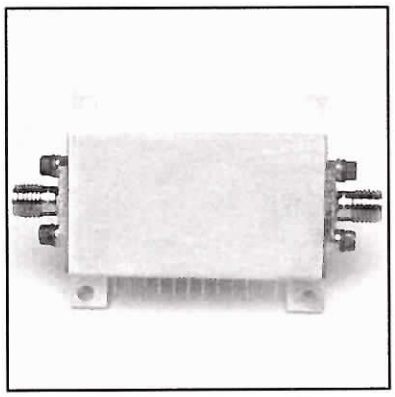

MODEL NUMBER DAT76191

PIN Diode 7 Section Attenuator

FEATURES

- 2200-2800 MHz
- 0.5 dB LSB, 47.5 dB Range
- 3.2 dB Insertion Loss
- TTL Control
- Replaceable SMA Connectors

7 BIT

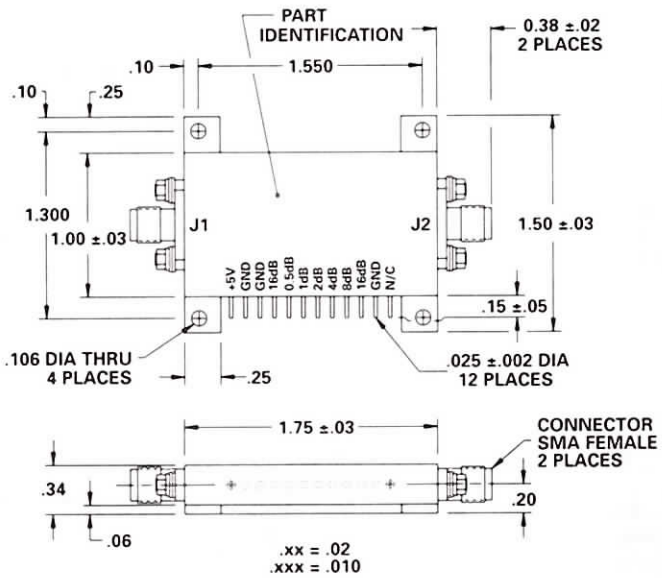

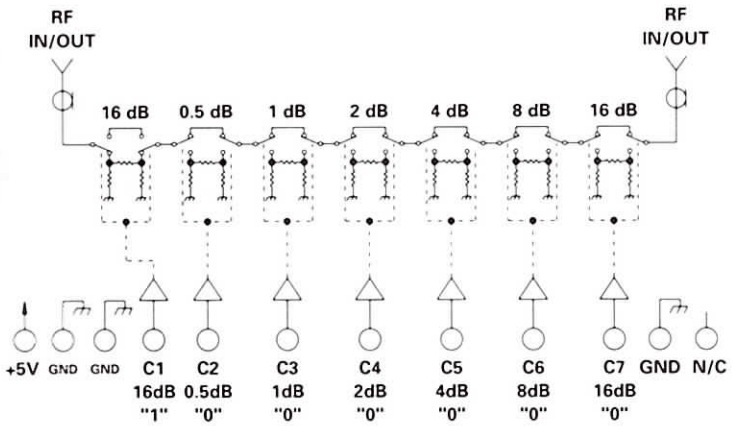

N/C = No Internal Connection

TYPICAL PERFORMANCE
at 25°C

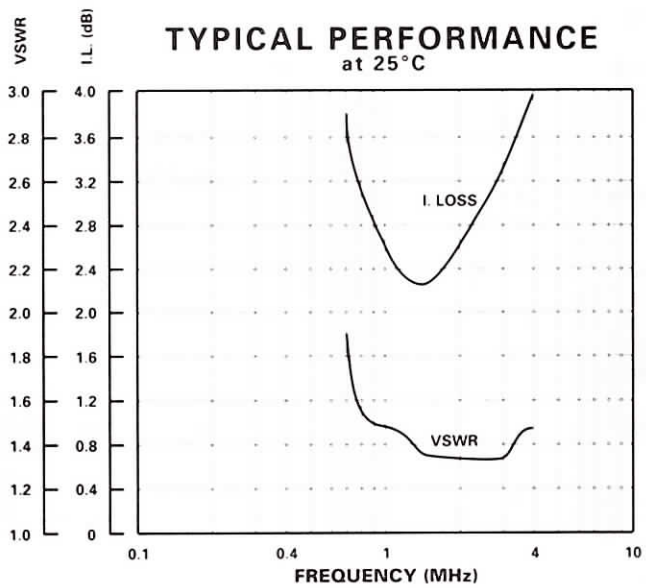

GUARANTEED PERFORMANCE

Parameter		Min	Typ	Max	Units	Conditions
Operating Frequency		2200		2800	MHz	
DC Current			96	120	mA	At +5 VDC Supply
Control Type			TTL			7 Line
						Logic "0" = Thru
						Logic "1" = Attenuation
Control Current	*High*				µA	VIH = +2.7 V
	Low				µA	VIL = +0.5 V
Insertion Loss			3.6	4.0	dB	at 25° C Worst Case
Attenuation	*LSB*		0.5		dB	
	Range	0		47.5	dB	0.5, 1, 2, 4, 8, 16, 16
	Accuracy			±0.5	dB	1 to 15.5 dB Attenuation
				±1.0	dB	16 to 31.5 dB Attenuation
				±1.5	dB	32 to 47.5 dB Attenuation
	Flatness			±0.25	dB	0.5 to 15.0 dB
				±0.4	dB	15.5 to 30.5 dB
				±0.6	dB	31.0 to 47.5 dB
VSWR				1.6/1		
Impedance			50		OHMS	
Switching Speed			65	100	nSec	50% TTL to 90% / 10% RF
Transition (Rise/Fall) Time			40		nSec	90% / 10% or 10% / 90% RF
Switching (Video) Transients			450		mV	Peak Value
Intercept Points	*3rd*	+45			dBm	At Insertion Loss State
RF Power	*Operate*		+20		dBm	0.1 dB Compression
	No Damage			+25	dBm	
Operating Temperature		0	+25	+75	°C	TA

DAICO *Industries*

310.507.3242 • FAX 310.507.5701 • www.daico.com

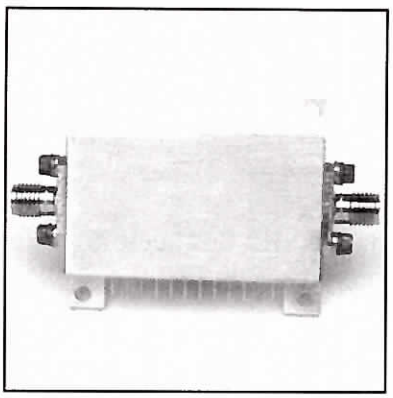

MODEL NUMBER CAT76235

Attenuator 7 Section

FEATURES

- 5 - 1200 MHz
- 0.5 dB LSB, 63.5 dB Range
- Binary Attenuation Range
- Phase Matched Vs. Attenuation
- 60 nSec Switching Speed
- TTL Control
- Excellent VSWR

7 BIT

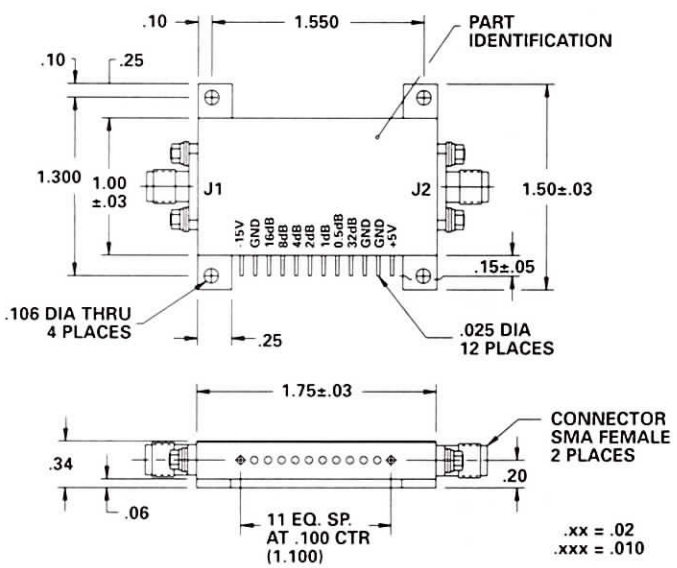

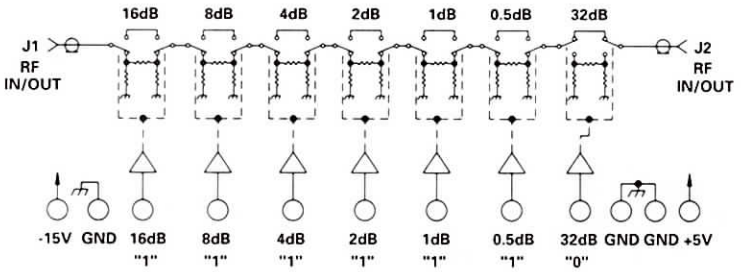

GUARANTEED PERFORMANCE

Parameter		Min	Typ	Max	Units	Conditions
Operating Frequency		5		1200	MHz	
DC Current			15	30	mA	At +5 VDC Supply
			20	35	mA	At -15 VDC Supply
Control Type			TTL			7 Lines Logic "0" = Thru Logic "1" = Attenuation
Control Current	*High*		0	±20	µA	VIH = +2.7 V
	Low		0	±20	µA	VIL = +0.5 V
Insertion Loss			7.1	9.0	dB	
Attenuation	*LSB*		0.5		dB	
	Range	0		63.75	dB	0.5, 1, 2, 4, 8, 16, 32
	Accuracy				dB	± (0.25 dB +2% of Atten. Setting in dB)
Attenuation Vs. Phase				±5	DEG	DC - 500 MHz
				±8	DEG	500 - 1000 MHz
VSWR			1.2/1	1.35/1		
Impedance			50		OHMS	
Switching Speed			60	100	nSec	50% TTL to 90% / 10% RF
Transition (Rise/Fall) Time			20		nSec	90% / 10% or 10% / 90% RF
Switching (Video) Transients			100		mV	Peak Value
Intercept Points	*2nd*		+63		dBm	70 MHz / 50 MHz
	3rd		+43		dBm	35 MHz / 50 MHz
RF Power	*Operate*		+8	+3	dBm	0.1 dB Compression < 50 MHz
			+17	+13	dBm	0.1 dB Compression > 50 MHz
	No Damage			+24	dBm	
Operating Temperature		-55	+25	+85	°C	TA

TYPICAL PERFORMANCE

at 25°C

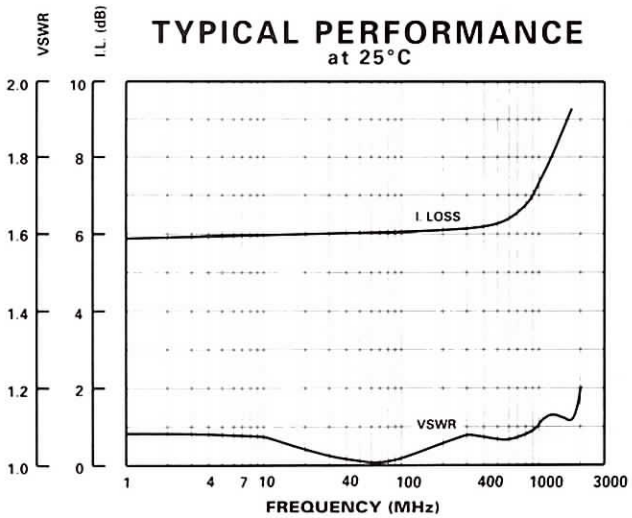

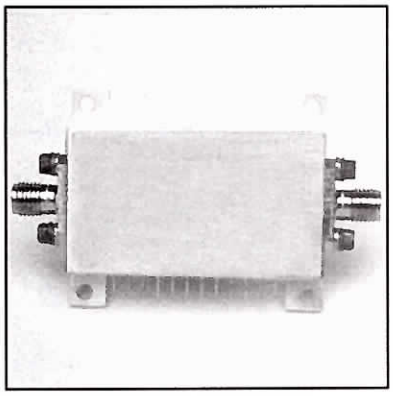

MODEL NUMBER DAT76227

Attenuator 7 Section

FEATURES

- 1700 - 2000 MHz
- 0.5 dB LSB
- SMA Female Connectors

7 BIT

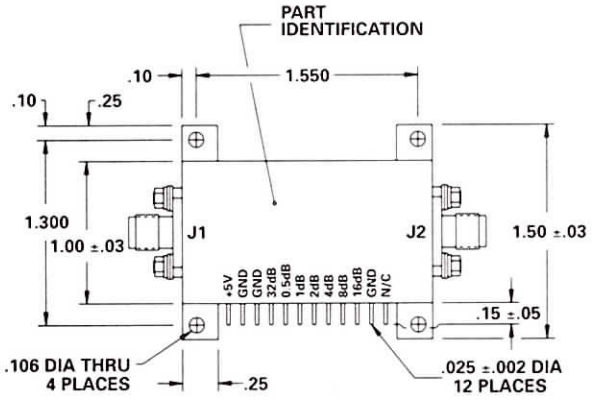

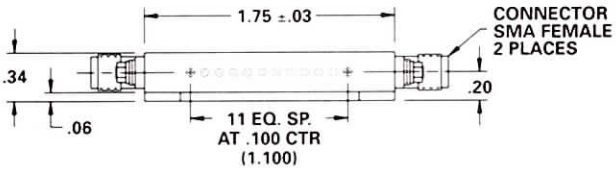

.xx = .02
.xxx = .010

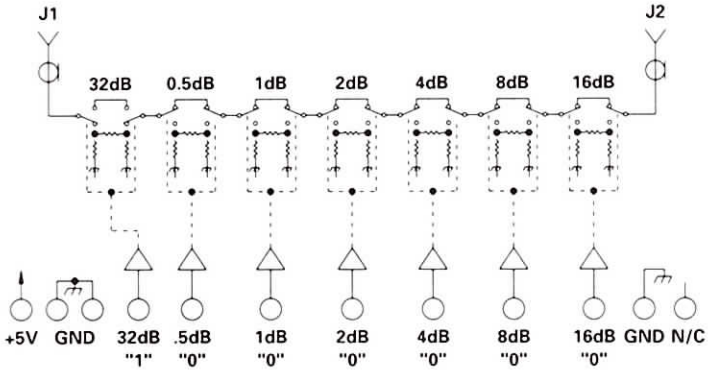

TYPICAL PERFORMANCE
at 25°C

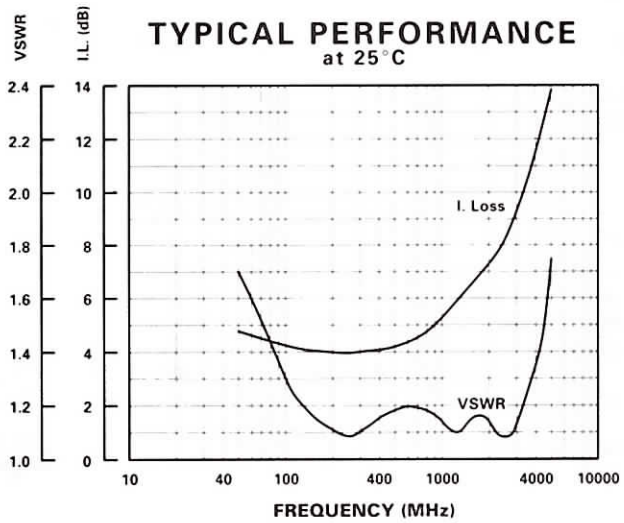

GUARANTEED PERFORMANCE

Parameter		Min	Typ	Max	Units	Conditions
Operating Frequency		1700		2000	MHz	
DC Current			10	15	mA	At +5 VDC Supply
Control Type			TTL			7 Line Logic "1" = Attenuation
Control Current	*High*			±10	µA	VIH = +2.7 V
	Low			±10	µA	VIL = +0.5 V
Insertion Loss			7	9	dB	
Attenuation	*LSB*	0.5			dB	
	Range			63.5	dB	0.5, 1, 2, 4, 8, 16, 32 dB
	Accuracy				dB	±(0.25dB +2% of Attenuation Setting in dB)
VSWR			1.2/1	1.6/1		
Impedance			50		OHMS	
Switching Speed			1.1	1.5	µSec	50% TTL to 90% / 10% RF
Transition (Rise/Fall) Time			0.8		µSec	10% / 90% or 90% / 10% RF
Switching (Video) Transients			85		mV	Peak Value
Intercept Points	*2nd*	+60	+68		dBm	1700 MHz / 900 MHz
	3rd	+25	+29		dBm	850 MHz / 900 MHz
RF Power	*Operate*		+11	+10	dBm	0.1 dB Compression
	No Damage			+20	dBm	
Operating Temperature		-55	+25	+125	°C	TA

DAICO *Industries*

310.507.3242 • FAX 310.507.5701 • www.daico.com

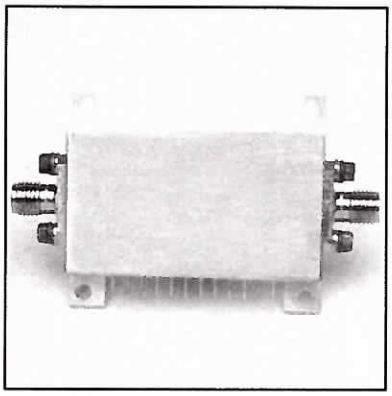

MODEL NUMBER DAT76228

Attenuator 7 Section

FEATURES

- 800 - 2000 MHz
- 0.5 dB LSB
- SMA Female Connectors
- +5 Volts, 15mA

7 BIT

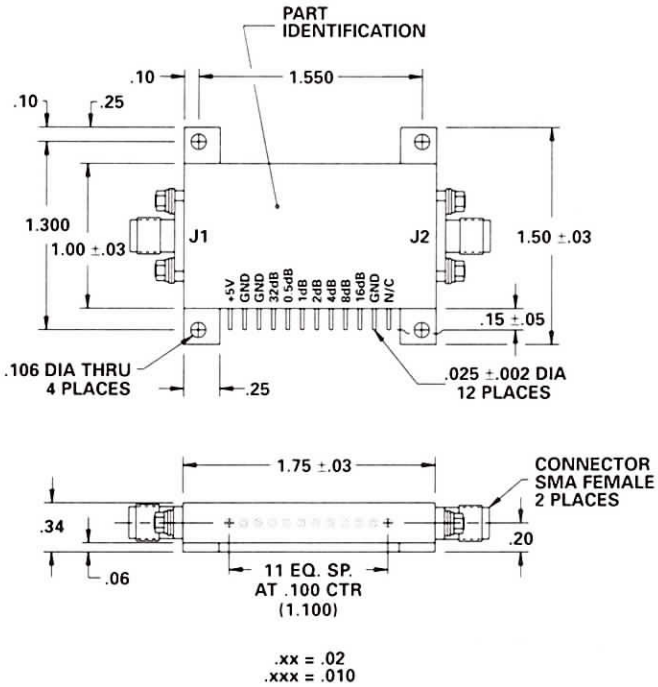

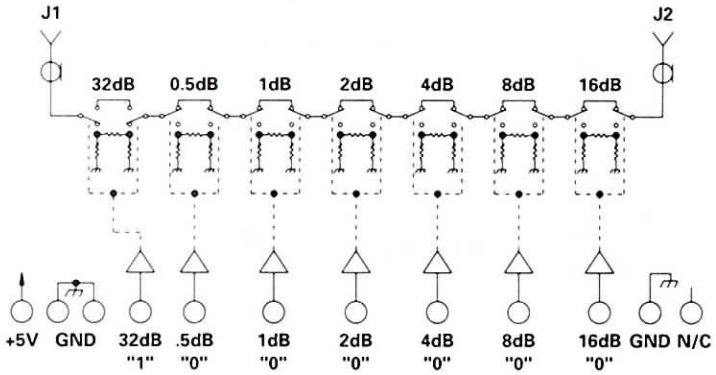

TYPICAL PERFORMANCE

at 25°C

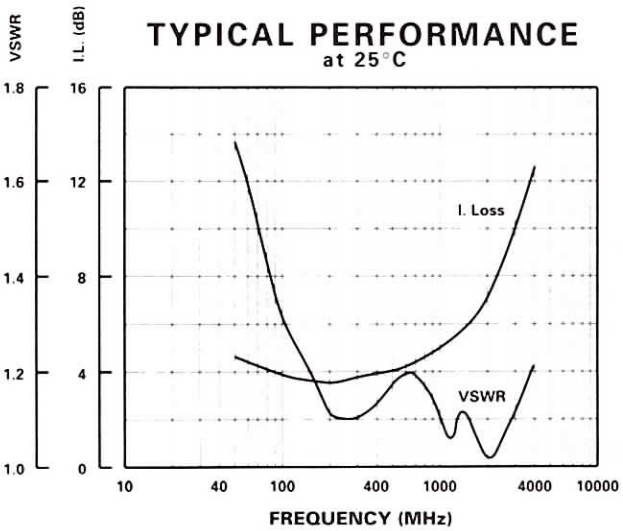

GUARANTEED PERFORMANCE

Parameter		Min	Typ	Max	Units	Conditions
Operating Frequency		800		2000	MHz	
DC Current			12	15	mA	At +5 VDC Supply
Control Type			TTL			7 Line Logic "1" = Attenuation
Control Current	*High*			±10	µA	VIH = +2.7 V
	Low			±10	µA	VIL = +0.5 V
Insertion Loss			7	9	dB	
Attenuation	*LSB*	0.5			dB	
	Range			63.5	dB	0.5, 1, 2, 4, 8, 16, 32 dB
	Accuracy				dB	±(0.25dB +2% of Attenuation Setting in dB)
VSWR			1.2/1	1.6/1		
Impedance			50		OHMS	
Switching Speed			1.1	1.5	µSec	50% TTL to 90% / 10% RF
Transition (Rise/Fall) Time			0.8		µSec	10% / 90% or 90% / 10% RF
Switching (Video) Transients			250		mV	Peak Value
Intercept Points	*2nd*	+60	+72		dBm	1700 MHz / 900 MHz
	3rd	+25	+30		dBm	850 MHz / 900 MHz
RF Power	*Operate*		+22	+10	dBm	0.1 dB Compression
	No Damage			+20	dBm	
Operating Temperature		-55	+25	+125	°C	TA

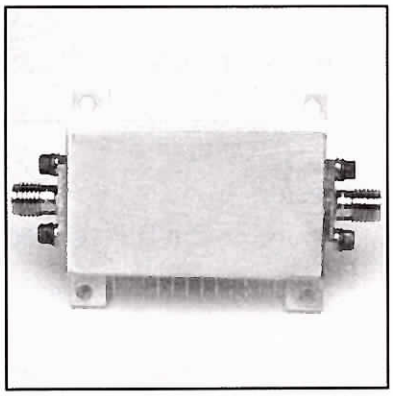

MODEL NUMBER DAT76287

Attenuator 7 Section

FEATURES

- 200 - 1000 MHz
- 5 dB Insertion Loss
- SMA Female Connectors
- 0.5 dB LSB

7 BIT

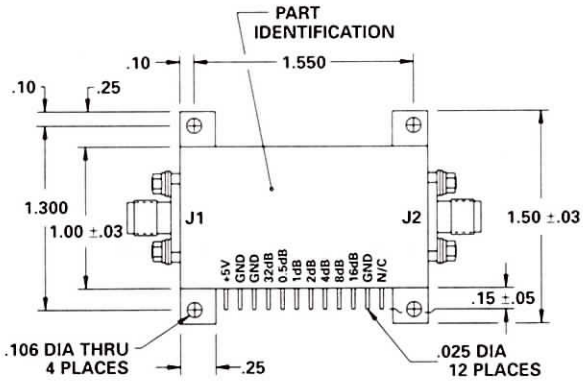

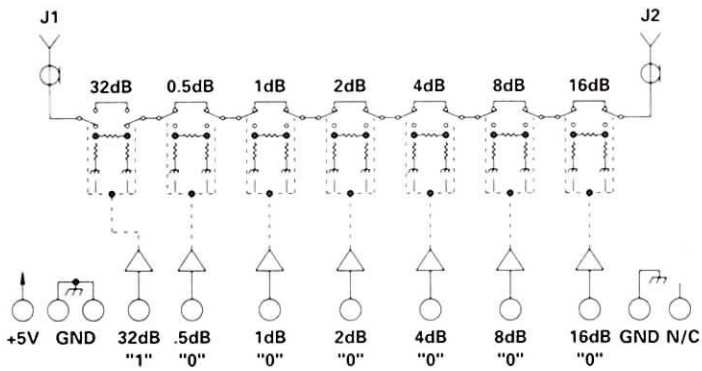

N/C = No Internal Connection

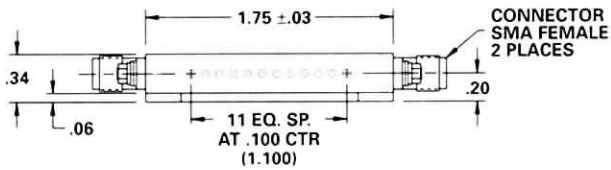

.xx = .02
.xxx = .010

TYPICAL PERFORMANCE
at 25°C

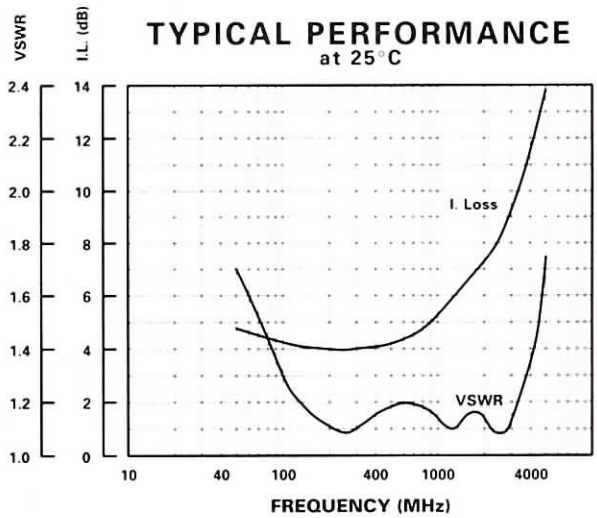

GUARANTEED PERFORMANCE

Parameter		Min	Typ	Max	Units	Conditions
Operating Frequency		200		1000	MHz	
DC Current			10	15	mA	At +5 VDC Supply
Control Type			TTL			7 Line
						Logic "1" = Attenuation
Control Current	*High*			±10	µA	VIH = +2.7 V
	Low			±10	µA	VIL = +0.5 V
Insertion Loss			5.2	8	dB	
Attenuation	*LSB*	0.5			dB	
	Range			63.5	dB	0.5, 1, 2, 4, 8, 16, 32 dB
	Accuracy				dB	±(0.25dB +2% of Attenuation
						Setting in dB)
VSWR			1.2/1	1.6/1		
Impedance			50		OHMS	
Switching Speed			1.1	1.5	µSec	50% TTL to 90% / 10% RF
Transition (Rise/Fall) Time			0.8		µSec	10% / 90% or 90% / 10% RF
Switching (Video) Transients			85		mV	Peak Value
Intercept Points	*2nd*		+68		dBm	1000 MHz / 800 MHz
	3rd		+29		dBm	850 MHz / 900 MHz
RF Power	*Operate*		+11	+10	dBm	0.1 dB Compression
	No Damage			+20	dBm	
Operating Temperature		-55	+25	+125	°C	TA

DAICO Industries

310.507.3242 • FAX 310.507.5701 • www.daico.com

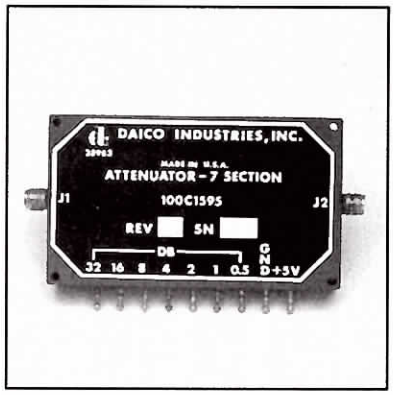

MODEL NUMBER 100C1595

PIN Diode 7 Section Attenuator

FEATURES

- 30-500 MHz
- 50 mA, +5 VDC
- 0.5 dB LSB, 63.5 dB Range
- TTL Control
- SMA Connectors
- See DA0295 for 38 Pin DIP Version

7 BIT

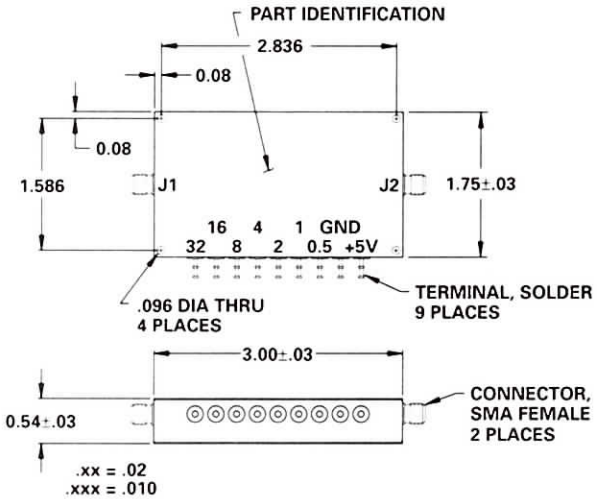

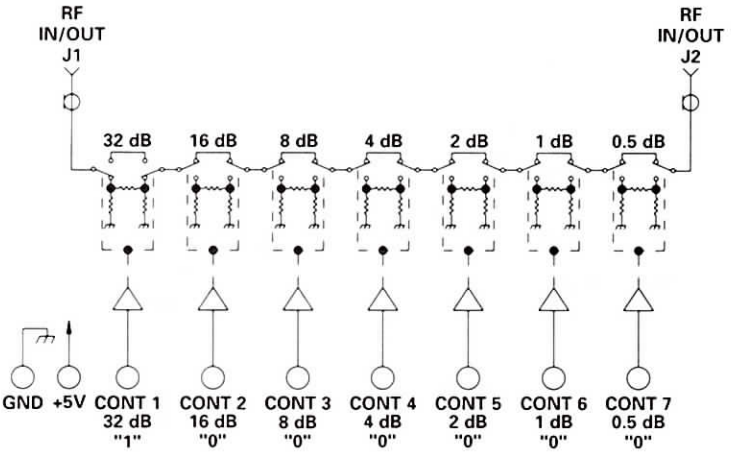

TYPICAL PERFORMANCE

at 25°C

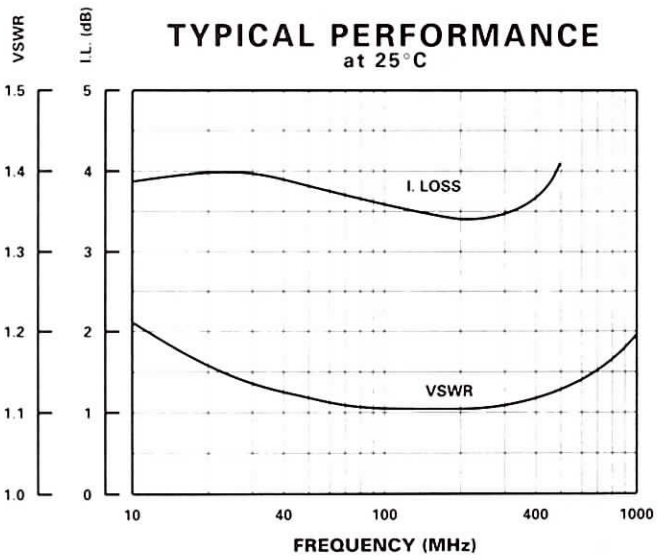

GUARANTEED PERFORMANCE

Parameter		Min	Typ	Max	Units	Conditions
Operating Frequency		30		500	MHz	
DC Current			50	85	mA	At +5 VDC Supply
Control Type			TTL			7 Line Logic "0" = Thru Logic "1" = Attenuation
Control Current	*High*			40	µA	VIH = +2.7V
	Low			-400	µA	VIL = +0.5V
Insertion Loss			4.2	6.0	dB	
Attenuation	*LSB*		0.5		dB	
	Range	0		63.5	dB	0.5, 1, 2, 4, 8, 16, 32
	Accuracy				dB	± (0.15 dB +2% of Atten. Setting in dB) for Values ≥ 1 dB ± (0.05 dB +15% of Atten. Setting in dB) for Values < 1 dB
VSWR			1.2/1	1.35/1		
Impedance			50		OHMS	
Switching Speed			5	20	µSec	50% TTL to 90% / 10% RF
RF Power	*Operate*		+18	+13	dBm	0.1 dB Compression
	No Damage			+20	dBm	
Operating Temperature		-55	+25	+85	°C	TA

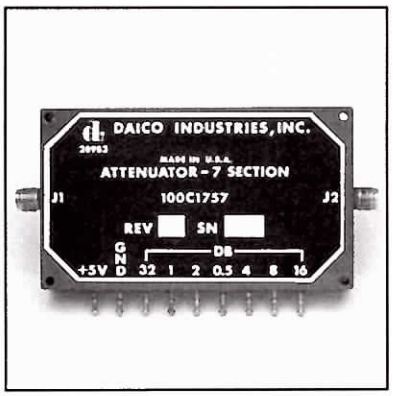

MODEL NUMBER 100C1757

Schottky Diode 7 Section Attenuator

FEATURES

- 45-200 MHz
- 25 nSec Switching Speed
- 0.5 dB LSB, 63.5 dB Range
- TTL Control
- SMA Connectors
- See DA0617 for 38 Pin DIP Version
- See DA0717 for Surface Mount Version

7 BIT

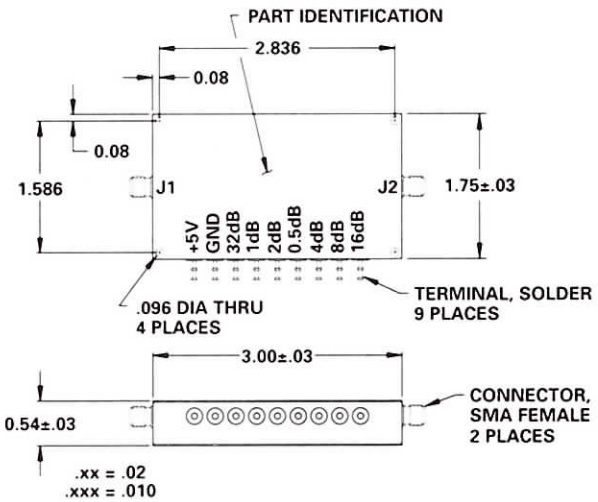

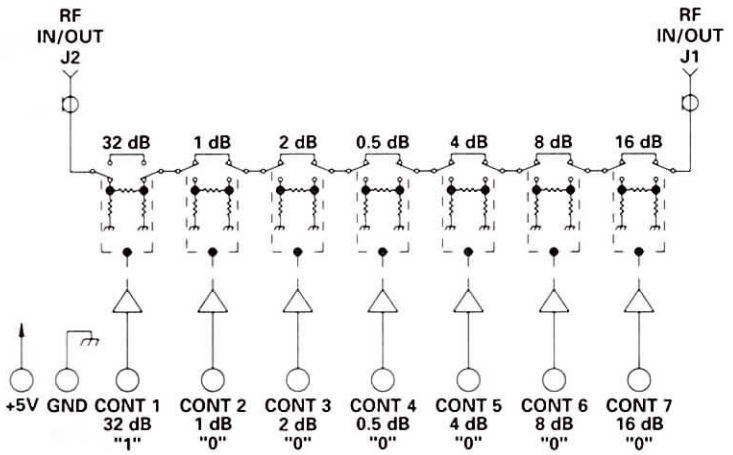

TYPICAL PERFORMANCE

at 25°C

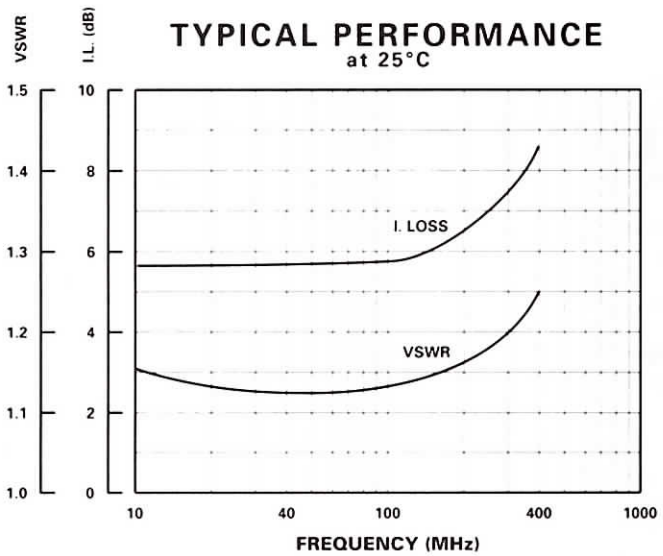

GUARANTEED PERFORMANCE

Parameter		Min	Typ	Max	Units	Conditions
Operating Frequency		45		200	MHz	
DC Current			400	640	mA	At +5 VDC Supply
Control Type			TTL			7 Line Logic "0" = Thru Logic "1" = Attenuation
Control Current	*High*		0	.025	mA	VIH = +2.7 V
	Low		-0.06	-0.20	mA	VIL = +0.5 V
Insertion Loss			6	7	dB	45 - 150 MHz
			7	8	dB	150 - 200 MHz
Attenuation	*LSB*		0.5		dB	
	Range	0		63.5	dB	0.5, 1, 2, 4, 8, 16, 32
	Accuracy				dB	± (0.2 dB ±3% of Attenuation Setting in dB, 45 to 150 MHz) ± (0.2 dB ±5% of Attenuation Setting in dB, 150 to 200 MHz)
VSWR			1.15/1	1.35/1		
Impedance			50		OHMS	
Switching Speed			25	35	nSec	50% TTL to 90% / 10% RF
Transition (Rise/Fall) Time			7		nSec	90% / 10% or 10% / 90% RF
Switching (Video) Transients			50	150	mV	Peak Value
Intercept Points	*2nd*		+82		dBm	
	3rd		+34		dBm	
RF Power	*Operate*		+13	+10	dBm	0.1 dB Compression
	No Damage			+20	dBm	
Operating Temperature		-55	+25	+85	°C	TA

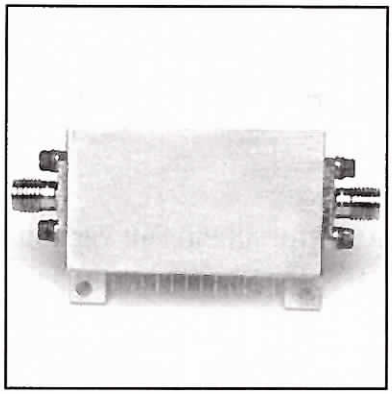

MODEL NUMBER DAT86198

Attenuator 8 Section

FEATURES

- 600-800 MHz
- SMA Connectors
- Low Loss, 3.4 dB Typical
- Phase Compensated

8 BIT

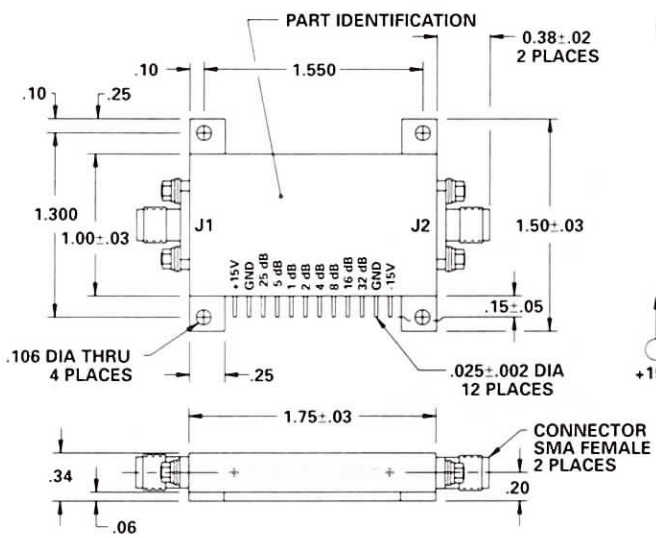

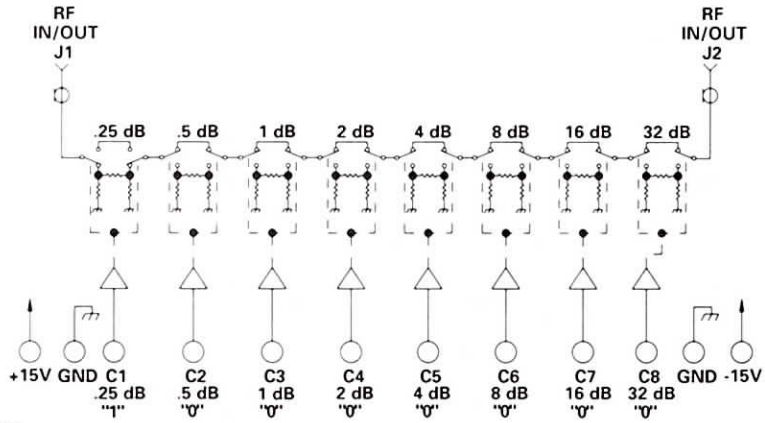

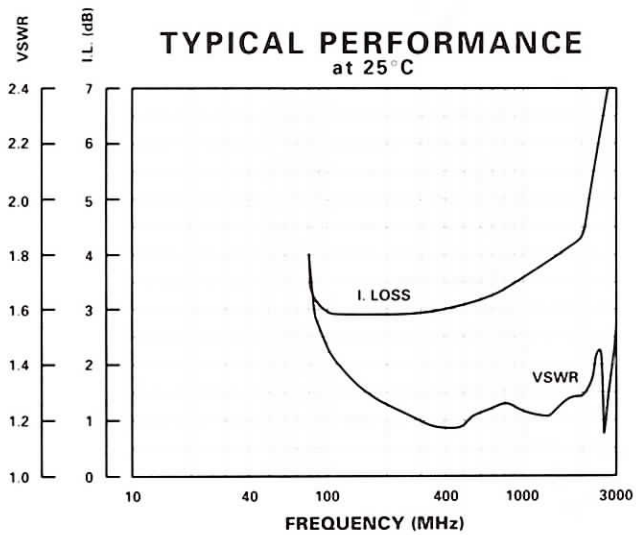

GUARANTEED PERFORMANCE

Parameter		Min	Typ	Max	Units	Conditions
Operating Frequency		600		800	MHz	
DC Current			12.7	20	mA	At +15 VDC Supply
			2.2	50	mA	At -15 VDC Supply
Control Type			TTL			8 Line
						Logic "0" = Thru
						Logic "1" = Attenuation
Control Current	*High*		±10	±100	µA	VIH = +2.7 V
	Low		±10	±100	µA	VIL = +0.5 V
Insertion Loss			3.4	4.5	dB	
Attenuation	*LSB*		.25		dB	
	Range	0		63.75	dB	.25, .5, 1, 2, 4, 8, 16, 32
	Accuracy				dB	±2% of Attenuation
	@ 700 MHz					Setting in dB
Attenuation Vs. Phase			±1	±5.636	DEG	@ 700 MHz
VSWR			1.26/1	1.3/1		
Impedance			50		OHMS	
Switching Speed			50	100	nSec	50% TTL to 90% / 10% RF
Transition (Rise/Fall) Time			22		nSec	10% / 90% or 90% / 10% RF
Switching (Video) Transients			45		mV	Peak Value
Intercept Points	*2nd*		71		dBm	1150 MHz / 750 MHz
	3rd		50		dBm	575 MHz / 750 MHz
RF Power	*Operate*		+21	+18	dBm	0.1 dB Compression
	No Damage			+27	dBm	
Operating Temperature		-55	+25	+125	C	TA

MODEL NUMBER CAT82048

Attenuator 8 Section

FEATURES

- 440 - 480 MHz
- 0.25 dB LSB
- Phase Vs. Atten. ±5 Degrees
- 100 nSec Switching Speed

8 BIT

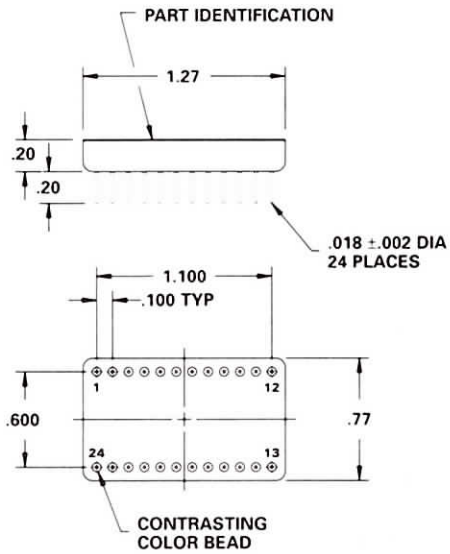

.xx = .02
.xxx = .010

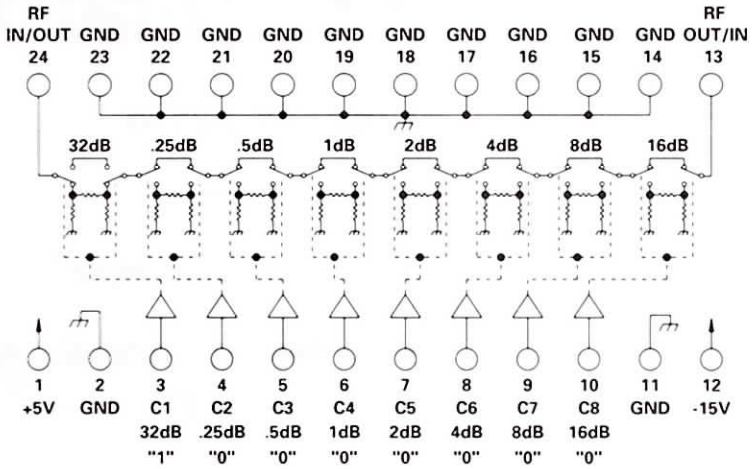

TYPICAL PERFORMANCE
at 25°C

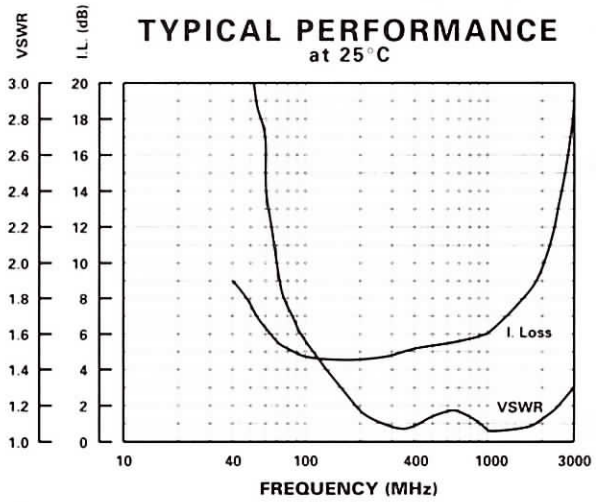

GUARANTEED PERFORMANCE

Parameter		Min	Typ	Max	Units	Conditions
Operating Frequency		440		480	MHz	
DC Current				200	mA	At +5 VDC Supply
				150	mA	At -15 VDC Supply
Control Type			TTL			8 Line
						Logic "1" = Attenuation
Control Current	*High*			±10	µA	VIH = +2.7 V
	Low			±10	µA	VIL = +0.5 V
Insertion Loss			5.2	5.9	dB	
Attenuation	*LSB*			0.25	dB	
	Range	0		63.75	dB	.25, 0.5, 1, 2, 4, 8, 16, 32 dB
	Accuracy				dB	0.25 dB ±20%
						0.5 dB ±10%
						1.0 dB ±5%
	Monotonicity					All Other ±3%
Phase Vs. Atten			±2		DEG	Each Bit
			±5		DEG	Total
VSWR			1.2/1	1.5/1		
Impedance			50		OHMS	
Switching Speed			70	100	nSec	50% TTL to 90% / 10% RF
Transition (Rise/Fall) Time			8		nSec	10% / 90% or 90% / 10% RF
Switching (Video) Transients			0.63	1.0	mVp-p	External BPF, 5 Section,
						BW = 460 ± 3 MHz, 0.43 mV
Intercept Points	*2nd*		+55		dBm	
	3rd		+34		dBm	
RF Power	*Operate*			+20	dBm	0.1 dB Comp. @ 460MHz
	No Damage			+23	dBm	
Operating Temperature		-30	+25	+75	C	TA

Voltage Control Attenuators

- Thin Film Hybrid
- Connectorized
- Linear & Non-Linear
- Full Military Screening Available
  (See Page 281)

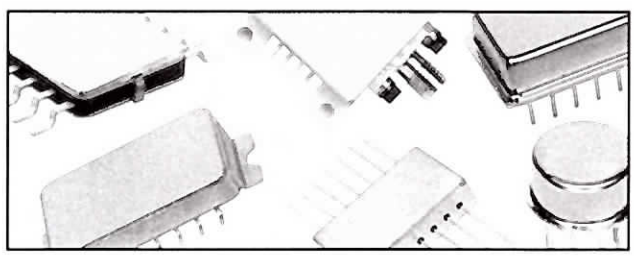

For additional products and information, please visit us at www.daico.com

Voltage Controlled Attenuators Specification Table

The Daico Voltage Controlled Attenuators are available both as MIC (Microwave Integrated Circuits) as well as in Solid State Connectorized form. Linearity of ±0.8 dB from the best straight line is achieved with frequency ranging from 10 to 1300 MHz constant impedance of 50 ohms is maintained at input and output ports over full attenuation range. VSWR over band is 1.25 typical.

Atten Range dB	Spec Freq MHz	Part Number	Control Voltage DC	Atten Slope dB/Volt	Slew Rate dB/µSec	Insertion Loss dB Max	RF Power dBm	VSWR Max	Linearity dB	DC Power Volts	DC Power mA	Package	Page
18	5-2000	DA0645	0 to +15V	-	-	3.0	+17	2.2	-	+15	15	5 Pin TO-8	228
18	20-300	DA0035	0 to +5V	6.5	6	1.5	+10	1.25	±0.8	+15	25	14 Pin DIP	230
										-15	25		
18	20-300	DA0735	0 to +15V	6.5	6	1.5	+10	1.25	±0.8	+15	60	14 Pin SMP	235
										-15	60		
40	20-300	DA0098	0 to +5V	15	6	2.0	+10	1.35	±2.0	+15	65	14 Pin DIP	232
										-15	110		
40	20-700	DA0998	0 to +5V	10	6	3.0	+10	1.5	±2.0	+15	65	14 Pin Flatpack	237
										-15	110		
25	50-1300	DA0243	0 to +5V	13	3	3.5	+10	1.5	±2.0	+15	65	13 Pin Flatpack	236
										-15	110		
18	100-600	DA0425	0 to +5V	6.5	6.5	1.5	+10	1.25	±1	+15	50	14 Pin DIP	231
										-15	40		
40	100-2000	DA0930	0 to +15V	-	6	3.75	+15	2.2	-	+15	10	5 Pin TO-8	229
38	450-950	CATV2225	0 to +15V	-	-	4.5/3	+20	2.0	±4.5	+15	12	6 Pin TO-8	233
										-15	14		
57	450-950	CATV2226	0 to +15V	-	-	5/3	+20	2.0	±6.5	+15	23	6 Pin TO-8	234
										-15	27		
16	10950-12750	CATV8068	0 to +5V	-	-	2/1.3	+15	2.0	-	+18	10	9 Pin Flatpack	238
										-10	10		
CONNECTORIZED VOLTAGE CONTROLLED ATTENUATORS													
18	20-300	100C0911	0 to +5V	6.5	6	1.5	+10	1.25	±1	+15	35	SMA	239
										-15	25		
40	20-300	100C0912	0 to +5V	15	6	2.0	+10	1.35	±2.0	+15	65	SMA	240
										-15	110		
40	30-150	100C1818	-	15	6	4.0	+10	1.35	±2.0	+15	70	SMA	243
										-15	70		
25	50-1300	100C1521	0 to +5V	13	3	3.5	+10	1.5	±2.0	+15	60	SMA	241
										-15	80		
40	150-250	100C1575	0 to +5V	15	6	4.0	+15	1.25	±2.0	+15	70	SMA	242
										-15	70		

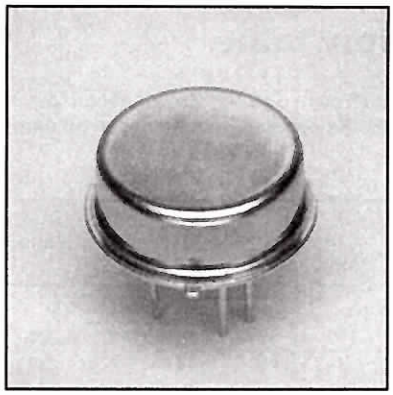

MODEL NUMBER DA0645

PIN Diode VCA

FEATURES

- 5-2000 MHz
- 34 dB Range
- TO-8 Package
- Low Cost

VCA

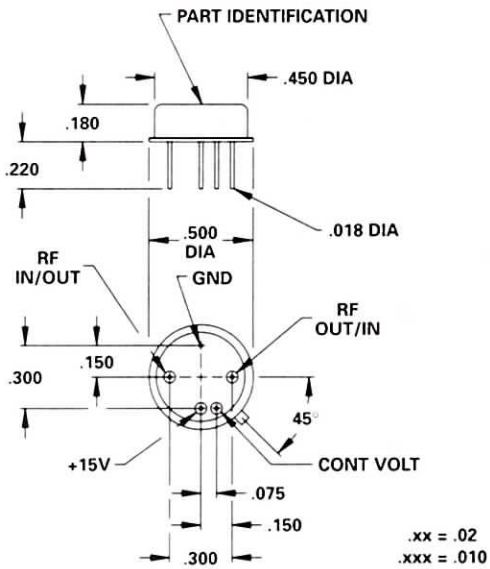

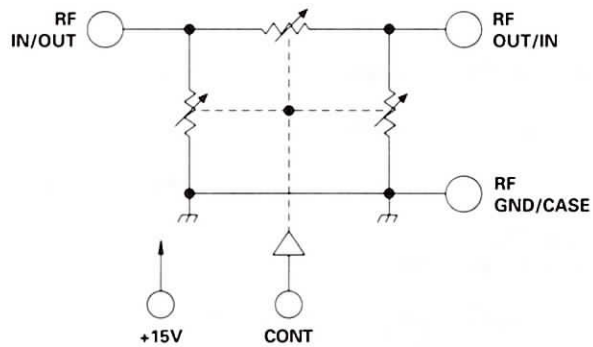

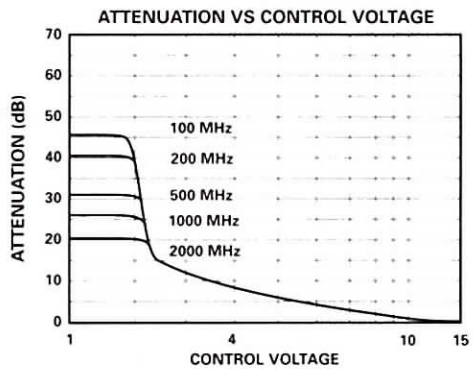

TYPICAL PERFORMANCE
at 25°C

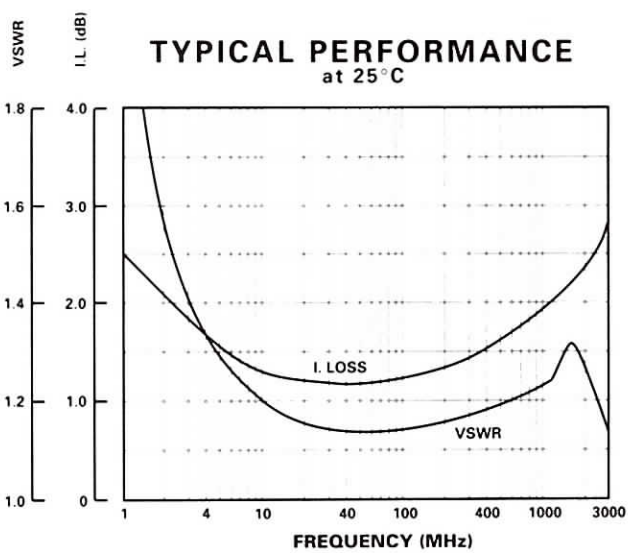

GUARANTEED PERFORMANCE

Parameter		Min	Typ	Max	Units	Conditions
Operating Frequency		5		2000	MHz	
DC Current	*Supply*		11	15	mA	At +15 V TYP, 18 V Max
	Control		4	7	mA	VC = 0 V to +15 V
Response Time			100	125	µSec	0% / 100%
			60		µSec	10% / 90%
Insertion Loss			1.7	2.5	dB	5 - 1000 MHz
			2.0	3.0	dB	1000 - 2000 MHz
Attenuation	*Range*	31	34		dB	5 - 500 MHz
		25	28		dB	500 - 1000 MHz
		18	21		dB	1000 - 2000 MHz
	Flatness		±0.5	±1.0	dB	5 - 1000 MHz, 0 - 15 dB Atten.
VSWR			1.20/1	2.0/1		5 - 1000 MHz
			1.30/1	2.2/1		1000 - 2000 MHz
Impedance			50		OHMS	
Intercept Points	*2nd*		+82		dBm	70 MHz / 50 MHz
	3rd		+46		dBm	35 MHz / 50 MHz
	2nd		+56		dBm	70 MHz / 50 MHz, 16 dB Atten.
	3rd		+36		dBm	35 MHz / 50 MHz, 16 dB Atten.
RF Power	*Operate*		+21	+17	dBm	0.1 dBm Compression (F = 5 MHz, Vc = +15 V)
	No Damage			+20	dBm	
Operating Temperature		-55	+25	+125	°C	TA

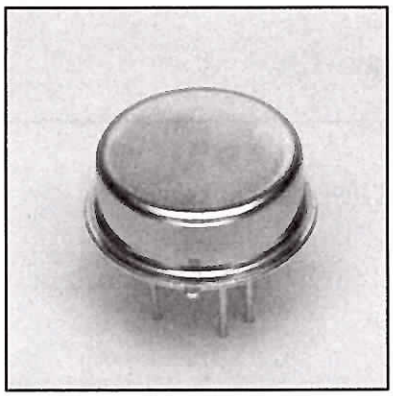

MODEL NUMBER DA0930

PIN Diode VCA

FEATURES

- 100-2000 MHz
- 48 dB Range
- TO-8 Package
- Low Cost

VCA

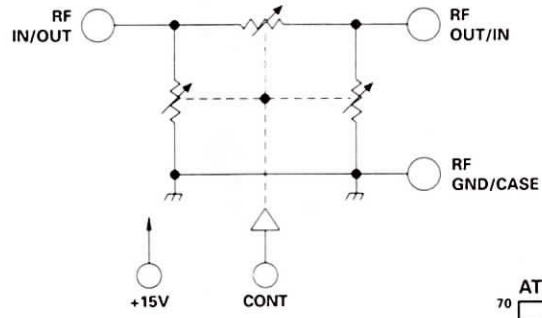

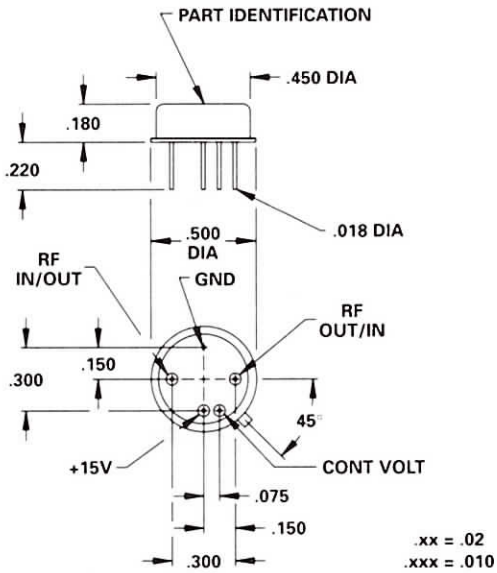

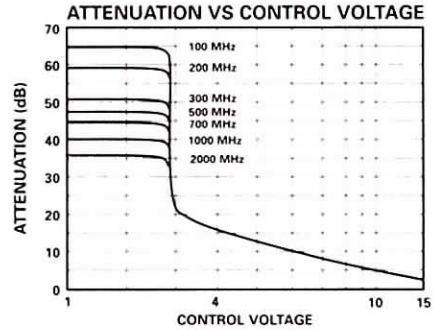

GUARANTEED PERFORMANCE

Parameter		Min	Typ	Max	Units	Conditions
Operating Frequency		100		2000	MHz	
DC Current	*Supply*		4	10	mA	At +15 V
	Control		8	10	mA	0 V Max. Atten., 15 V = I.L.
Control Type						0 to +15 VDC into a 2K OHM ±20% Input Impedance
Insertion Loss			2.3	3.0	dB	100 - 500 MHz
			2.4	3.25	dB	500 - 1000 MHz
			2.9	3.75	dB	1000 - 2000 MHz
Max Attenuation		40	48		dB	100 - 500 MHz
(VCont = 0VDC)		35	41		dB	500 - 1000 MHz
		25	36		dB	1000 - 2000 MHz
Flatness			±0.5	±1.0	dB	100 - 1000 MHz
(0 dB to 25 dB Atten.)			±1.0	±1.5	dB	1000 - 2000 MHz
VSWR			1.4/1	1.8/1		100 - 1000 MHz
	0 - 25 dB Atten.		1.4/1	2/1		1000 - 2000 MHz
	> 25 dB Atten.		1.5/1	2.2/1		1000 - 2000 MHz
Impedance			50		OHMS	
Slew Rate			1	2	µSec	10% / 90% RF
			4	6	µSec	50% Cont 0% / 100% RF
Intercept Points	*2nd*		+37		dB	300 MHz / 200 MHz
(Atten. = 6 dB)	*3rd*		+41		dB	150 MHz / 200 MHz
RF Power	*Operate*		+10	+6	dBm	100 - 200 MHz
			+13	+10	dBm	200 - 500 MHz
			+20	+15	dBm	500 - 2000 MHz
	No Damage			+23	dBm	
Operating Temperature		-55	+25	+125	°C	TA

TYPICAL PERFORMANCE
at 25°C

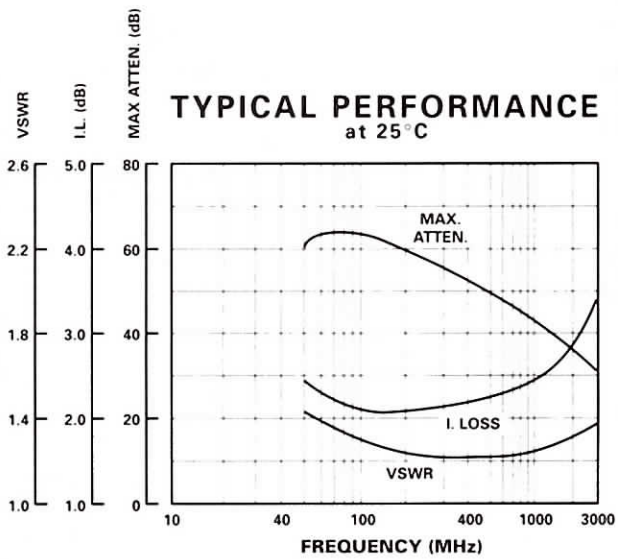

DAICO Industries

310.507.3242 • FAX 310.507.5701 • www.daico.com

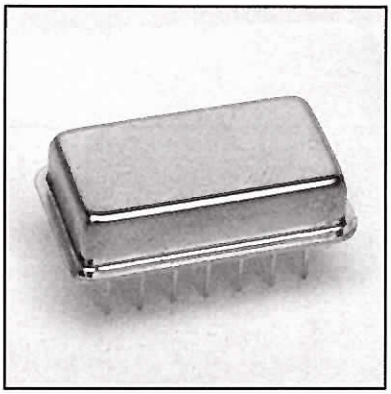

MODEL NUMBER DA0035

PIN Diode Linear VCA

FEATURES

- 20-300 MHz
- 20 dB Linear Range Typical
- ±0.8 dB Linearity
- +44 dBm 3rd Order Intercept
- 0.8 dB Insertion Loss
- 14 Pin DIP
- See 100C0911 For Connectorized Version

VCA

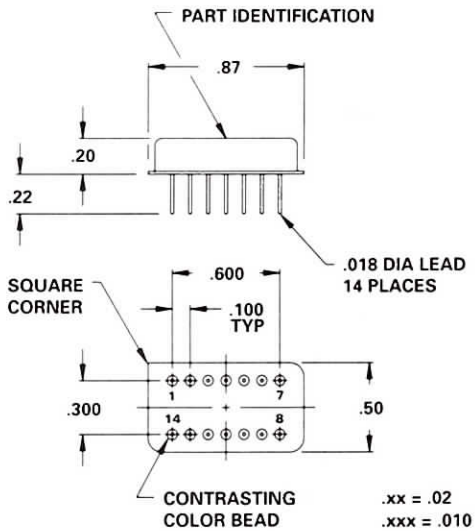

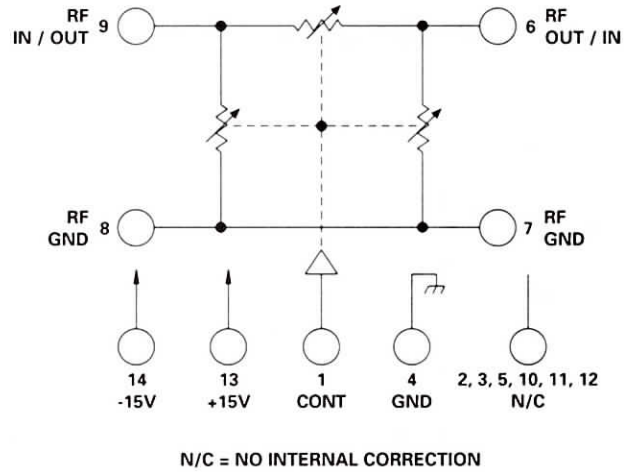

TYPICAL PERFORMANCE

Attenuation vs Control Voltage
At 100 MHz

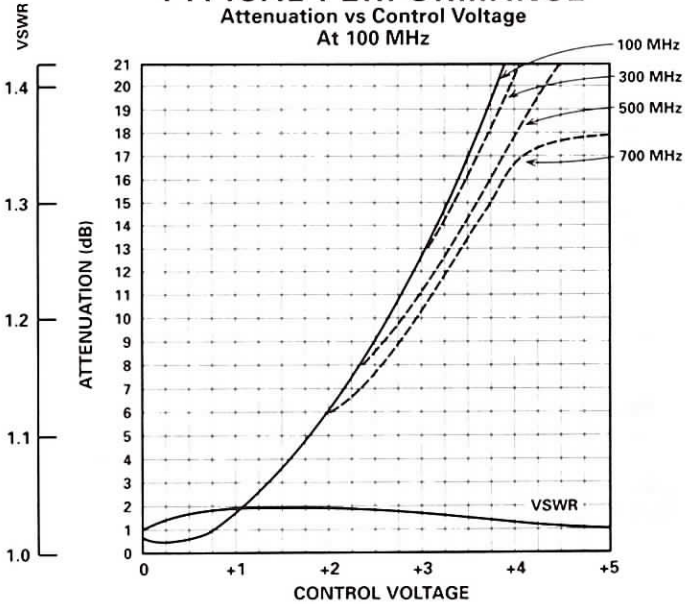

GUARANTEED PERFORMANCE

Parameter		Min	Typ	Max	Units	Conditions
Operating Frequency		20		300	MHz	
DC Current			25		mA	At +15 VDC Supply
			25		mA	At -15 VDC Supply
Control Current				1	mA	0 V to +5 V Control
Insertion Loss			0.8	1.5	dB	
Attenuation	*Range*	18	20		dB	
	Slope		6.5±1.5		dB/V	
	Linearity		±0.8		dB	Best Straight Line Fit From IL +1.5 dB to 18 dB
VSWR			1.15	1.25/1		
Impedance			50		OHMS	
Slew Rate			6		dB/µs	
Intercept Points	*2nd*		+77		dBm	
	3rd		+44		dBm	
RF Power	*Operate*			+10	dBm	
	No Damage			+20	dBm	
Operating Temperature		0	+25	+60	°C	TA

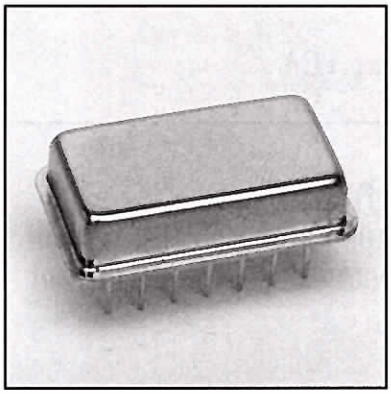

MODEL NUMBER DA0425

PIN Diode Linear VCA

FEATURES

- 100-600 MHz
- 20 dB Linear Range Typical
- ±0.5 dB Linearity
- 1.5 dB Insertion Loss
- +42 dBm 3rd Order Intercept
- 14 Pin DIP

VCA

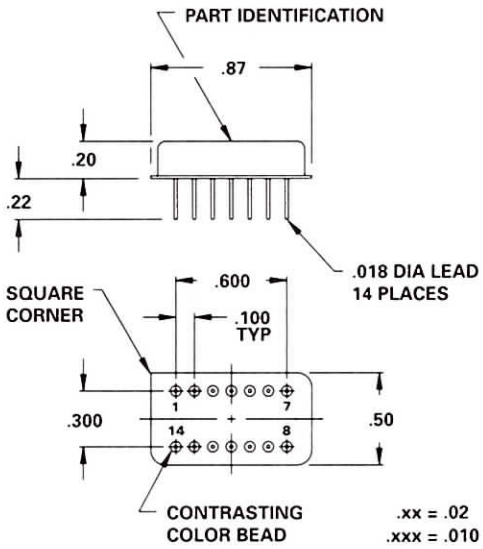

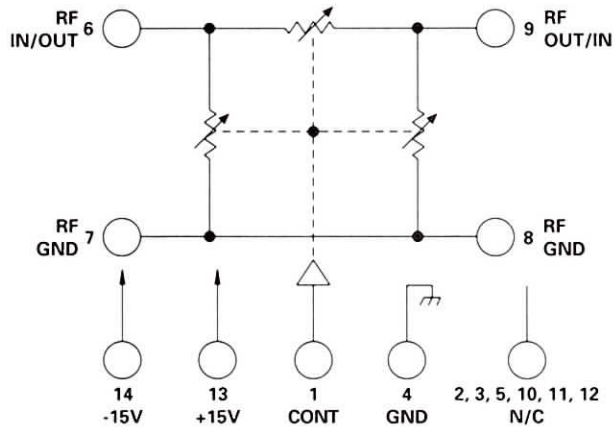

N/C = NO INTERNAL CORRECTION

TYPICAL PERFORMANCE

Attenuation vs Control Voltage
at 500 MHz

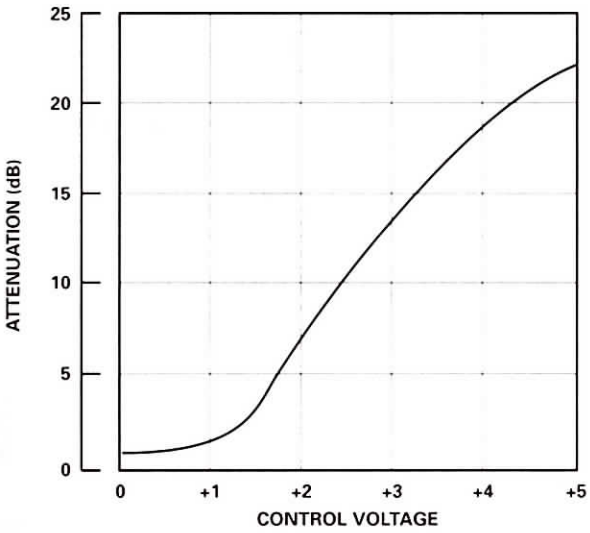

GUARANTEED PERFORMANCE

Parameter		Min	Typ	Max	Units	Conditions
Operating Frequency		100		600	MHz	
DC Current			33	50	mA	At +15 VDC Supply
			22	40	mA	At -15 VDC Supply
Control Type						0 to 5V (Analog Input)
Control Current			0.5	1	mA	0 V = I.L
						+5 V = Max. Atten.
Insertion Loss				1.5	dB	At 0 V Control
Attenuation	*Range*	18			dB	0 V to 5 V Control
	Slope	5.0	6.5	8.0	dB/V	Ref. to Best Straight Line Fit
	Linearity		±0.5	±1.0	dB	Best Straight Line Fit From
						IL +1.5 dB to 15 dB
VSWR			1.1/1	1.25/1		
Impedance			50		OHMS	
Slew Rate			6.5		dB/µs	
Intercept Points	*2nd*		+75		dBm	127 MHz / 214 MHz
	3rd		+42		dBm	107 MHz / 127 MHz
RF Power	*Operate*			+10	dBm	
	No Damage			+20	dBm	
Operating Temperature		-55	+25	+85	°C	TA

DAICO Industries

310.507.3242 • FAX 310.507.5701 • www.daico.com

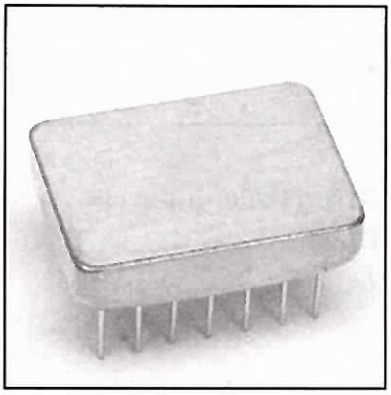

MODEL NUMBER DA0098

PIN Diode Linear VCA

FEATURES

- 20-300 MHz
- 40 dB Linear Range Typical
- ±2 dB Linearity
- 2 dB Insertion Loss
- 14 Pin DIP
- See DA0998 For Flat Pack Version
- See 100C0912 For Connectorized Version

VCA

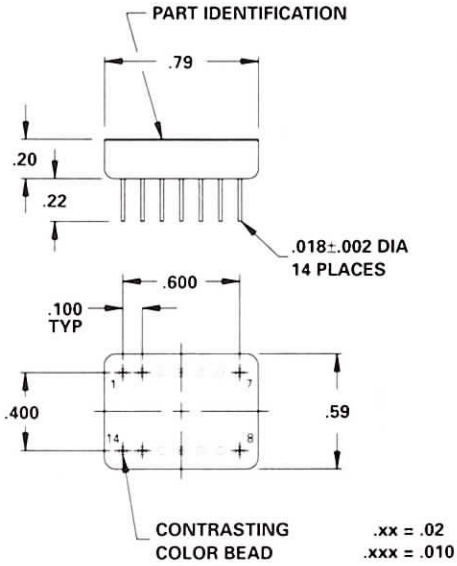

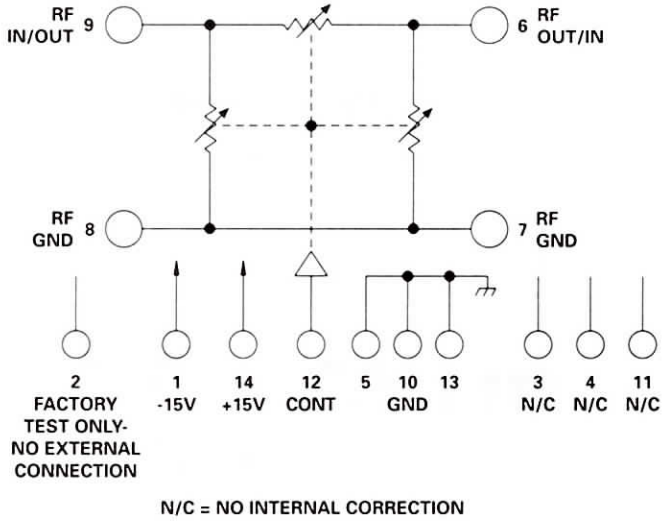

TYPICAL PERFORMANCE

Attenuation vs Control Voltage

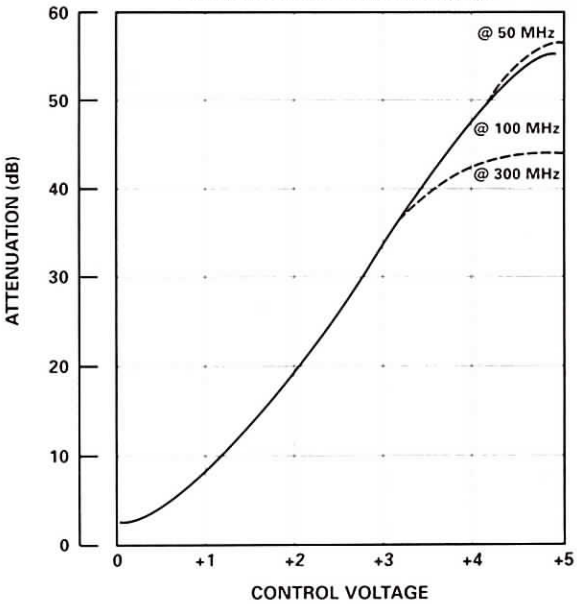

GUARANTEED PERFORMANCE

Parameter		Min	Typ	Max	Units	Conditions
Operating Frequency		20		300	MHz	
DC Current			42	65	mA	At +15 VDC Supply
(10k ohm Input Impedance)			80	110	mA	At -15 VDC Supply
Control Current				0.5	mA	0 V = Insertion Loss +5 V = Max. Atten.
Insertion Loss			1.3	2.0	dB	At 0 V Control
Attenuation	*Range*	40	50		dB	At 100 MHz
	Slope		15±3		dB/V	
	Linearity		±2		dB	Best Straight Line Fit From IL +2 dB to 40 dB
VSWR				1.4/1		
Impedance			50		OHMS	
Slew Rate			6		dB/µs	
RF Power	*Operate*			+10	dBm	
	No Damage			+20	dBm	
Operating Temperature		-55	+25	+85	°C	TA

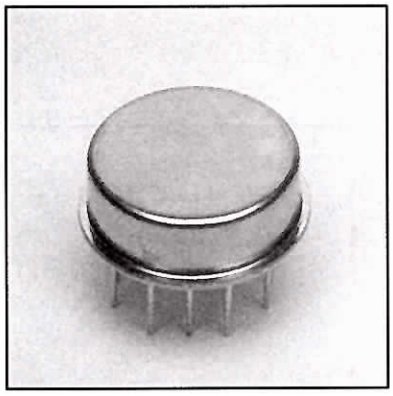

MODEL NUMBER CATV2225

VCA

FEATURES

- 450 - 950 MHz
- Linear
- 38 dB Range

VCA

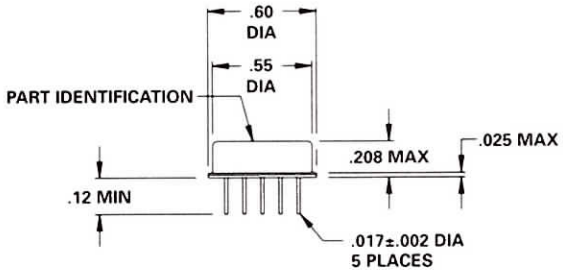

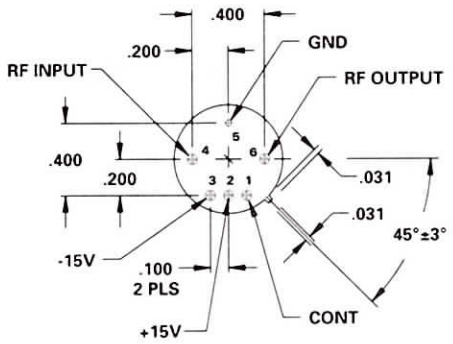

.xx =.02
.xxx = .010

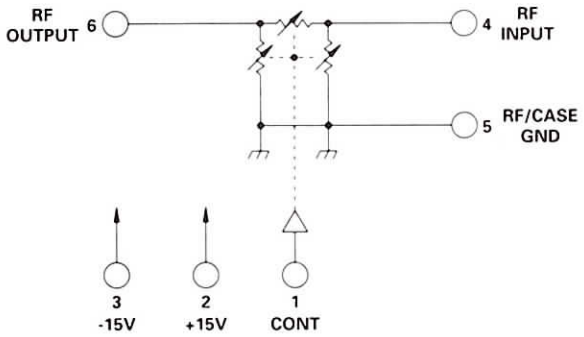

TYPICAL PERFORMANCE
at 25°C

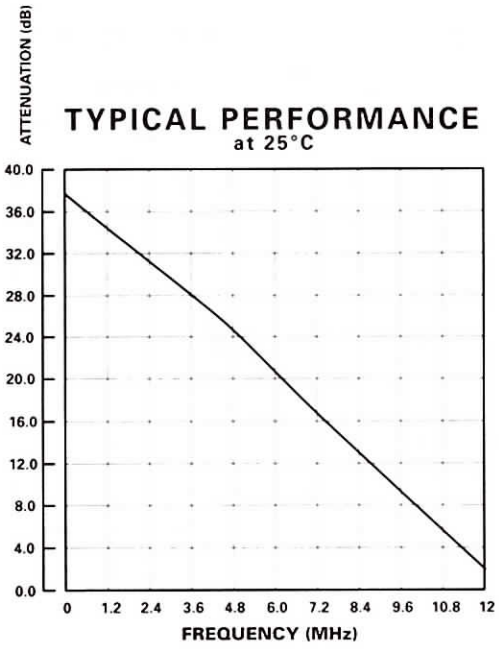

GUARANTEED PERFORMANCE

Parameter	Min	Typ	Max	Units	Conditions
Operating Frequency	450		950	MHz	
DC Current		12	40	mA	At +15 VDC Supply
		14	40	mA	At -15 VDC Supply
Control Current		2.4	14	mA	
Control Voltage Range	-12		0	V	
Insertion Loss		3	4.5	dB	At -12 VDC Supply
Attenuation Range	33.5	38		dB	0 VDC
Variation Over Frequency		0.5	±1	dB	0 - 25 dB Attenuation
		0.5	±1.2	dB	26 - 30 dB Attenuation
Linearity (Note)	-4.5		+4.5	dB	4.5 - 33.5 dB Attenuation
Response Time			4	µSec	50% Input V to 90% RF
VSWR		1.25/1	2.0/1		
Impedance		50		OHMS	
Third Order IMD Products	-25			dBc	0 - 25 dB Attenuation
RF Power *Operate*			+15	dBm	
No Damage			+20	dBm	
Operating Temperature	-55	+25	+105	°C	TA

Note: Straight Line Attenuation in dB = [(-3 dB / Volt) x Cont.Volt] -38 dB

DAICO *Industries*

310.507.3242 • FAX 310.507.5701 • www.daico.com

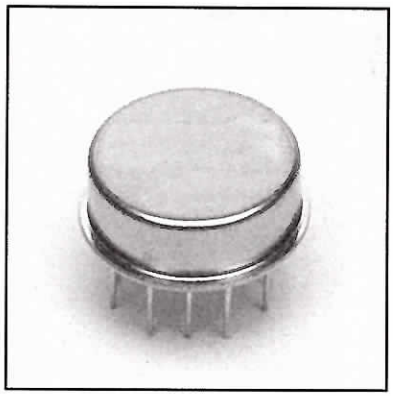

MODEL NUMBER CATV2226	VCA

FEATURES

- 450 - 950 MHz
- Linear
- 57 dB Range

VCA

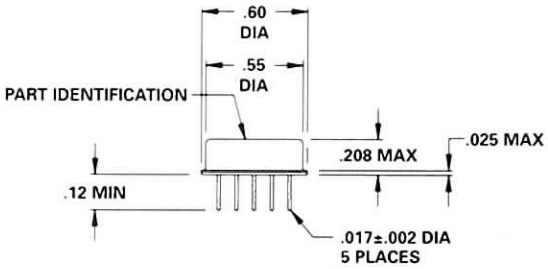

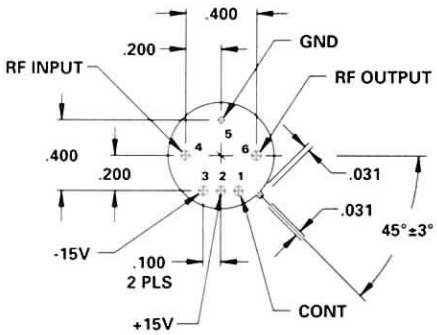

.xx =.02
.xxx = .010

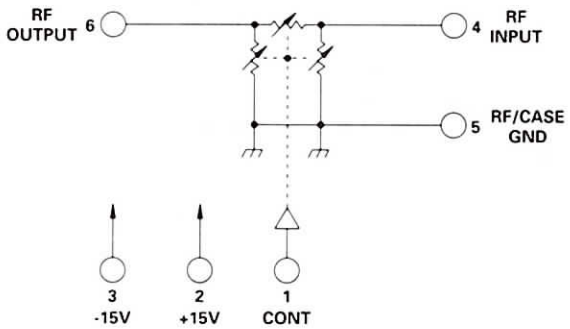

TYPICAL PERFORMANCE

at 25°C

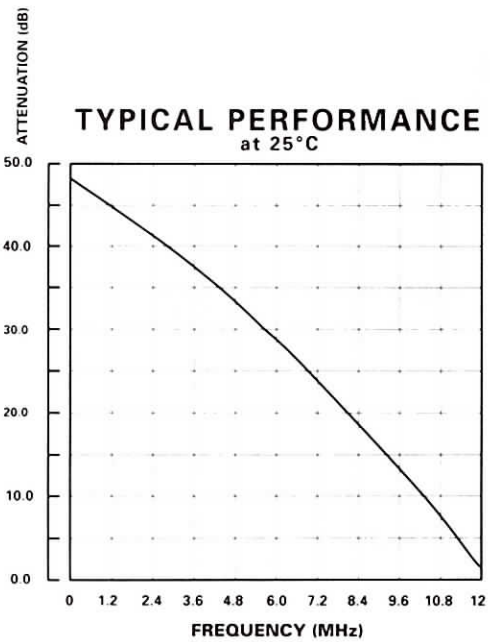

GUARANTEED PERFORMANCE

Parameter	Min	Typ	Max	Units	Conditions
Operating Frequency	450		950	MHz	
DC Current		23	40	mA	At +15 VDC Supply
		27	40	mA	At -15 VDC Supply
Control Current		1.3	14	mA	0 V = Max Attenuation
Control Voltage Range	-12		0	V	
Insertion Loss		3	5	dB	At -12 VDC Supply
Attenuation Range	53.5	57		dB	0 VDC
Variation Over Frequency		0.3	±1	dB	0 - 25 dB Attenuation
			±1.2	dB	26 - 30 dB Attenuation
		1.5	±2.0	dB	31 - 54 dB Attenuation
Linearity (note)	-6.5		+6.5	dB	3 - 53.5 dB Attenuation
Response Time			4	µSec	50% Input V to 90% RF
VSWR		1.25/1	2.0/1		
Impedance		50		OHMS	
Third Order IMD Products	-25			dBc	0 - 25 dB Attenuation
RF Power *Operate*			+15	dBm	
No Damage			+20	dBm	
Operating Temperature	-55	+25	+105	°C	TA

Note: Straight Line Attenuation in dB = [(-4.75 dB / Volt) x Cont.Volt] -60 dB

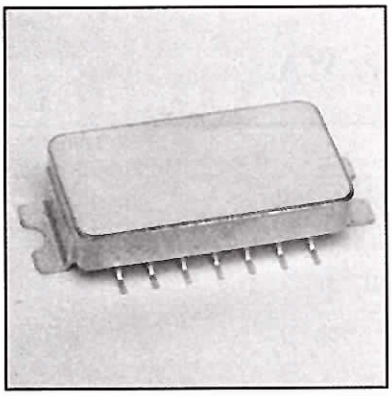

MODEL NUMBER DA0735

PIN Diode Linear VCA

FEATURES

- 20-300 MHz
- 20 dB Linear Range Typical
- ±0.8 dB Linearity
- +47 dBm 3rd Order Intercept
- 0.8 dB Insertion Loss
- See DA0035 For 14 Pin DIP Version
- See 100C0911 For Connectorized Version

VCA

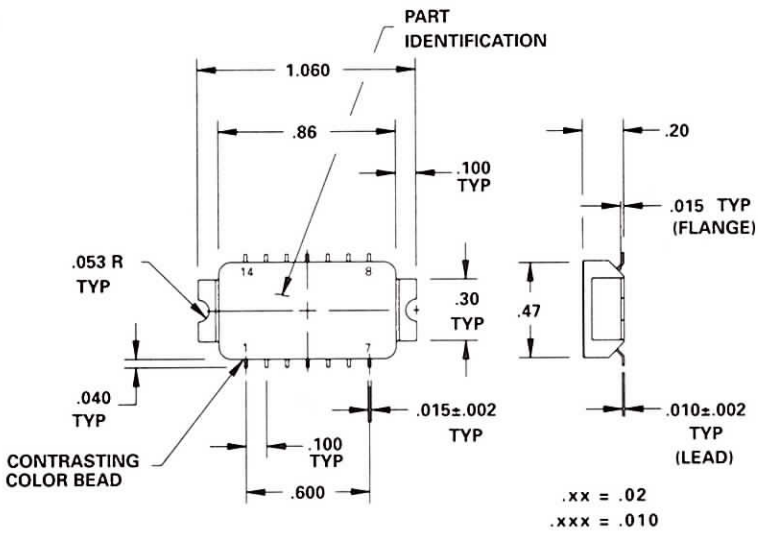

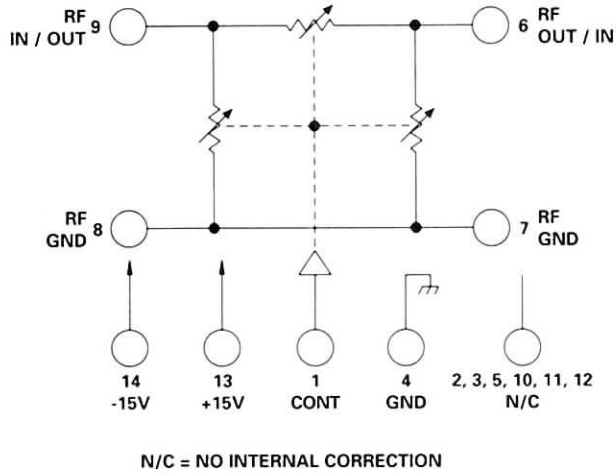

TYPICAL PERFORMANCE

ATTENUATION VS CONTROL VOLTAGE AT 160 MHZ

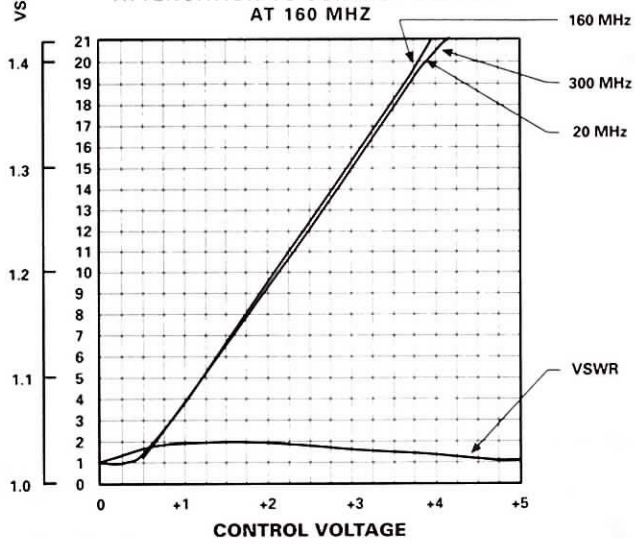

GUARANTEED PERFORMANCE

Parameter		Min	Typ	Max	Units	Conditions
Operating Frequency		20		300	MHz	
DC Current			30	60	mA	At +15 VDC Supply
			40	60	mA	At -15 VDC Supply
Control Current				1	mA	0 V to +5 V Control
Insertion Loss			0.8	1.5	dB	
Attenuation	*Range*	18	20		dB	
	Slope	5	6.5	8	dB/V	
	Linearity			±0.8	dB	Best Straight Line Fit From IL +1.5 dB to 18 dB
VSWR			1.1/1	1.4/1		
Impedance			50		OHMS	
Slew Rate			6		dB/µs	
Intercept Points	*2nd*		+97		dBm	70 MHz / 50 MHz
	3rd		+47		dBm	35 MHz / 50 MHz
RF Power	*Operate*			+10	dBm	
	No Damage			+20	dBm	
Operating Temperature		-55	+25	+85	°C	TA

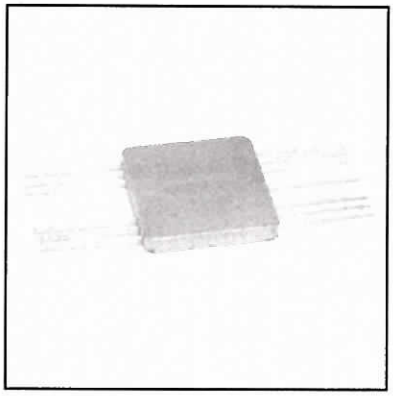

MODEL NUMBER DA0243

PIN Diode Linear VCA

FEATURES

- 50-1300 MHz
- 40 dB Range
- 1.3 dB Insertion Loss
- ±2 dB Linearity
- See 100C1521 For Connectorized Version

VCA

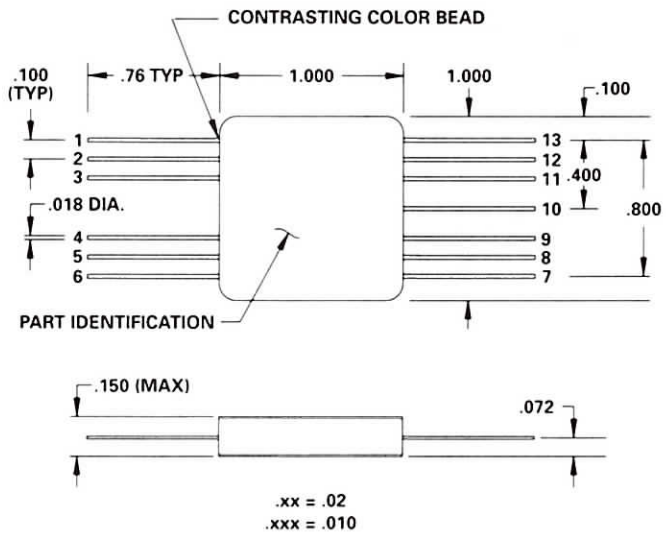

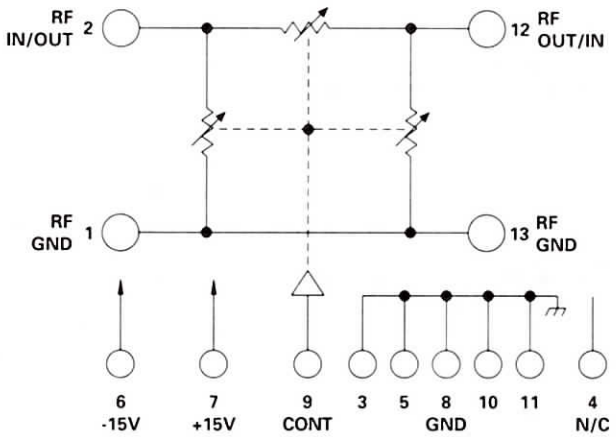

N/C = NO INTERNAL CORRECTION

TYPICAL PERFORMANCE

Attenuation vs Control Voltage at 500 MHz

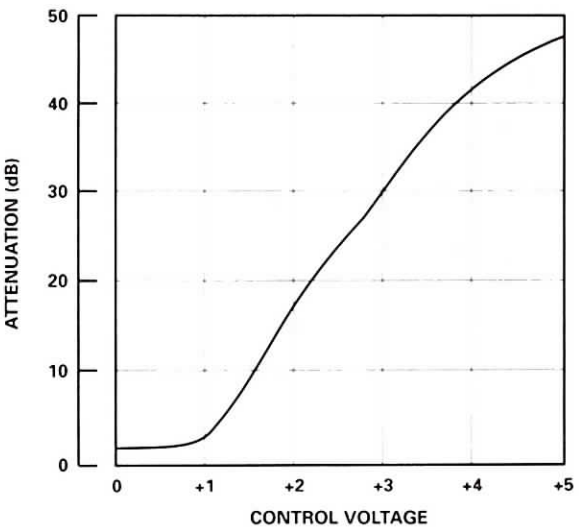

GUARANTEED PERFORMANCE

Parameter		Min	Typ	Max	Units	Conditions
Operating Frequency		50		1300	MHz	
DC Current			60	65	mA	At +15 VDC Supply
			80	110	mA	At -15 VDC Supply
Control Current				1	mA	0 V = I.L
						+5 V = Max. Atten.
Insertion Loss				2.0	dB	50 - 500 MHz
				3.0	dB	500 - 1100 MHz
				3.5	dB	1100 - 1300 MHz
Attenuation	*Range*	40			dB	50 - 500 MHz
		30			dB	500 - 1100 MHz
		25			dB	1100 - 1300 MHz
	Slope		13±3		dB/V	
	Linearity		±2		dB	Best Straight Line Fit From:
						IL +2 dB to 35 dB at 50 - 500 MHz
						IL +2 dB to 25 dB at 500 - 1100 MHz
						IL +2 dB to 20 dB at 1100 - 1300 MHz
VSWR				1.25/1		50 - 500 MHz
				1.50/1		500 - 1300 MHz
Impedance			50		OHMS	
Slew Rate			3		dB/µs	
Intercept Points	*2nd*		+80		dBm	
	3rd		+35		dBm	
RF Power	*Operate*			+10	dBm	
Operating Temperature		-55	+25	+85	°C	TA

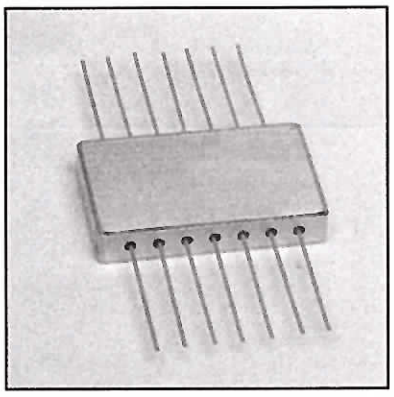

MODEL NUMBER DA0998

PIN Diode VCA

FEATURES

- 20-700 MHz
- 52 dB Linear Range
- ±2 dB Linearity
- 3 dB Insertion Loss
- 14 Pin Flat Pack
- See DA0098 For 14 Pin DIP Version

VCA

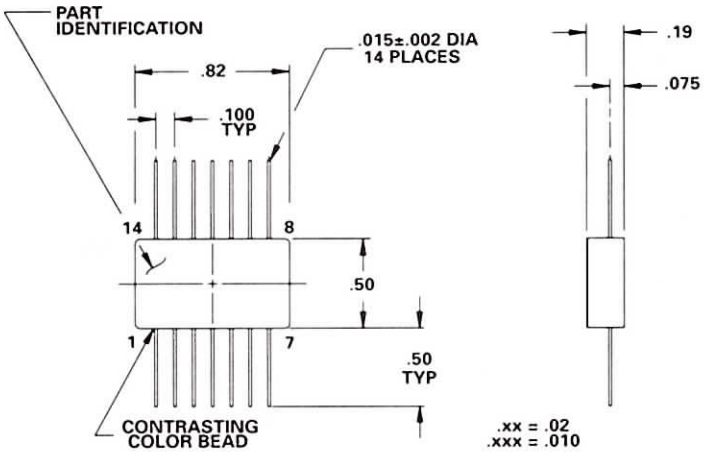

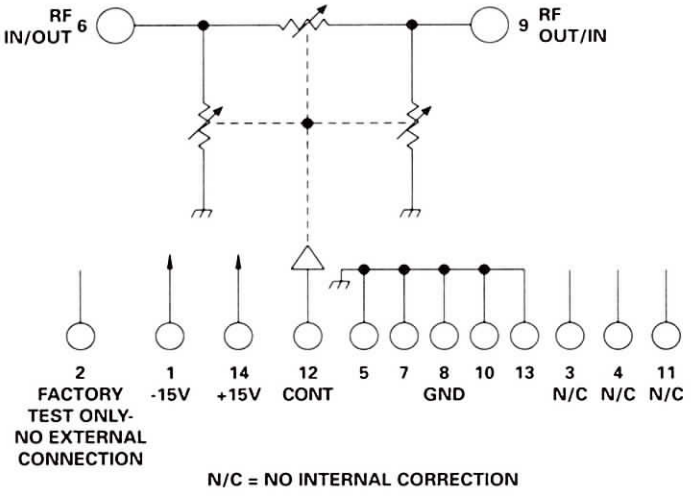

TYPICAL PERFORMANCE

Attenuation vs Control Voltage at 25°C

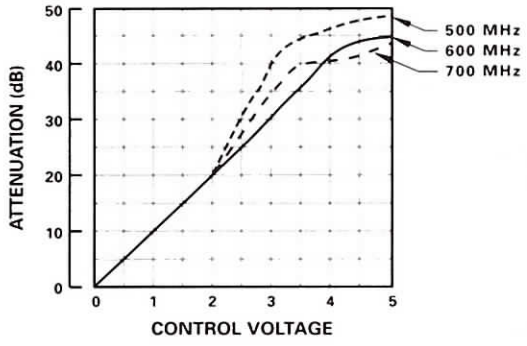

TYPICAL PERFORMANCE

at 25°C

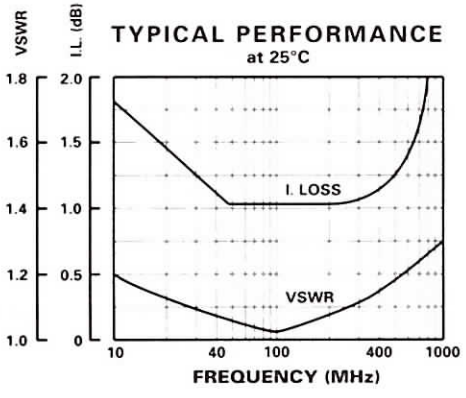

GUARANTEED PERFORMANCE

Parameter		Min	Typ	Max	Units	Conditions
Operating Frequency		20		700	MHz	
DC Current			42	65	mA	At +15 VDC Supply
			80	110	mA	At -15 VDC Supply
Control Current				1.0	mA	0 V Input is Thru +5 V Input is Max. Atten.
Insertion Loss			1.8	3.0	dB	
Attenuation	*Range*	40	52		dB	20 - 300 MHz
		28	42		dB	300 - 700 MHz
	Slope	10		14	dB/V	
	Linearity			±2	dB	Best Straight Line Fit From IL +28 dB
VSWR			1.3/1	1.5/1		
Impedance			50		OHMS	
Slew Rate			6		dB/µs	
Intercept Points	*2nd*		+70		dBm	260 MHz / 140 MHz
	3rd		+45		dBm	130 MHz / 140 MHz
RF Power	*Operate*			+10	dBm	
	No Damage			+20	dBm	
Operating Temperature		-55	+25	+85	°C	TA

DAICO Industries

310.507.3242 • FAX 310.507.5701 • www.daico.com

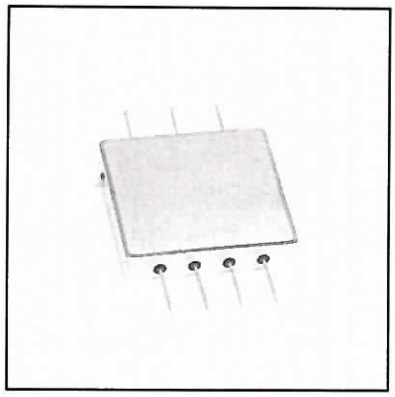

MODEL NUMBER CATV8068

PIN Diode VCA

FEATURES

- 10.95-12.75 GHz
- Space Application
- Hermetic Package
- Radiation Tolerant, 100 K Rad
- Surface Mount

VCA

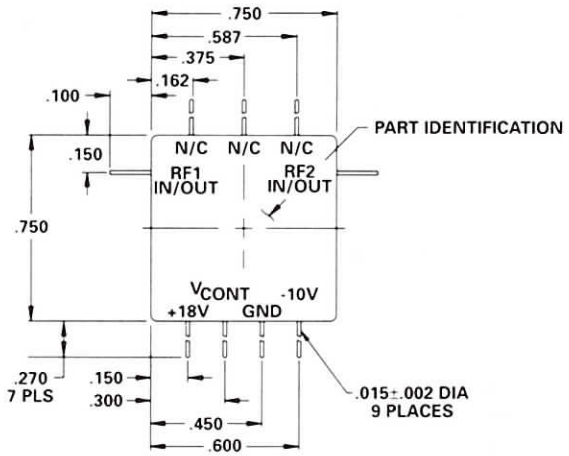

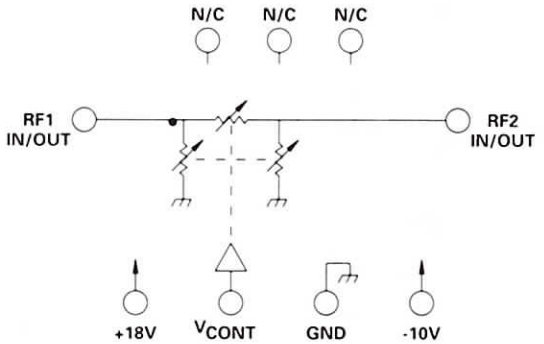

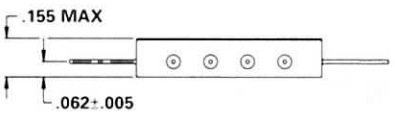

XX = .02
XXX = .010

TYPICAL PERFORMANCE
at 25°C

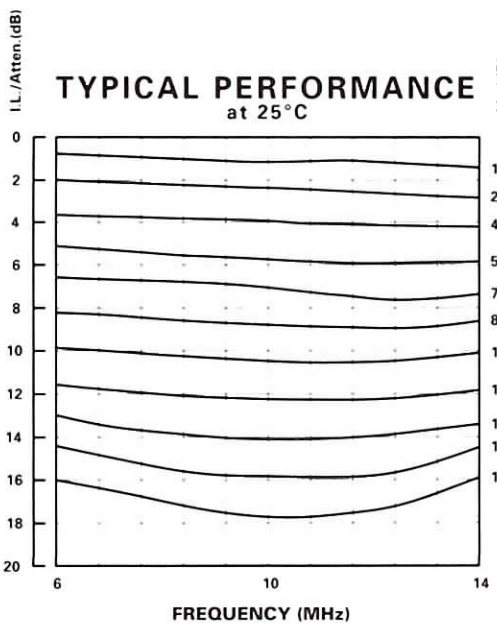

I.L. (dB)	ATTENUATION (dB)	CONTROL VOLTAGE
1.28	0	0.0
2.72	1.44	0.5
4.24	1.52	1.0
5.85	1.61	1.5
7.41	1.56	2.0
8.97	1.56	2.5
10.60	1.63	3.0
12.15	1.55	3.5
13.70	1.55	4.0
15.27	1.57	4.5
16.75	1.48	5.0

GUARANTEED PERFORMANCE

Parameter	Min	Typ	Max	Units	Conditions
Operating Frequency	10.95		12.75	GHz	
DC Current			10	mA	At +18 VDC Supply
			10	mA	At - 10 VDC Supply
Control Type		TTL			Load Factor 1
					Logic "0" = Isolation
					Logic "1" = Thru
Control	0		5	V	Of Turn
Insertion Loss		1.3	2.0	dB	
VSWR *Input / Output*		1.3/1	2.0/1		
Impedance		50		OHMS	
Attenuation Range	14.5	16		dB	
Flatness					
Amplitude Stability					
Attenuation Linearity					
Switching Speed				µSec	
Transition (Rise/Fall) Time					
Switching (Video) Transients					
Intercept Points *3rd*	+14.5			dBm	
RF Power *Operate*				dBm	
No Damage			+15	dBm	
Operating Temperature	-35	+25	+75	C	TA

MODEL NUMBER 100C0911	PIN Diode Linear VCA

FEATURES

- 20-300 MHz
- 20 dB Linear Range
- ±0.8 dB Linearity
- +44 dBm IP3
- 0.8 dB Insertion Loss
- SMA Connectors
- See DA0035 For DIP Version

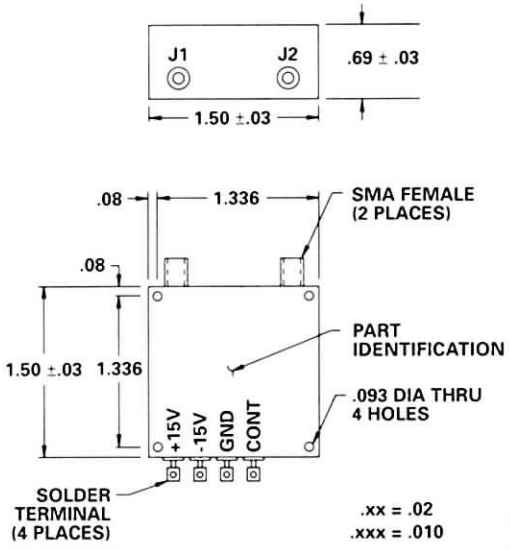

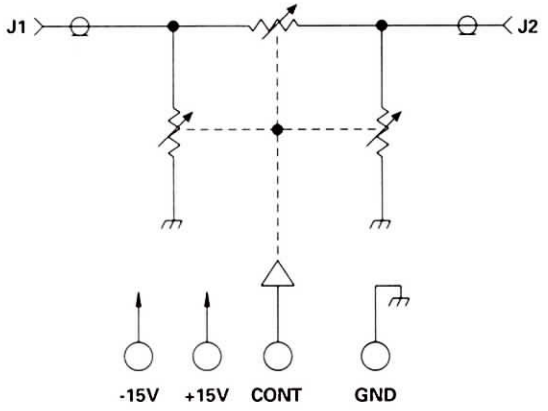

GUARANTEED PERFORMANCE

Parameter		Min	Typ	Max	Units	Conditions
Operating Frequency		20		300	MHz	
DC Current			25		mA	At +15 VDC Supply
			25		mA	At -15 VDC Supply
Control Current				1.0	mA	0 V = Insertion Loss
(10k ohm input impedance)						+5 V = Max. Atten.
Insertion Loss			0.8	1.5	dB	At 0 V
Attenuation	*Range*	18			dB	
	Slope	5	6.5	8	dB/V	
	Linearity		±1		dB	Best Straight Line Fit From IL +1.5 dB to 18 dB
	VS Temperature		±0.5		dB	At 35°C
VSWR			1.1/1	1.25/1		
Impedance			50		OHMS	
Slew Rate			6		dB/µs	
RF Power	*Operate*			+10	dBm	
	No Damage			+20	dBm	
Operating Temperature		0	+25	+60	°C	TA

TYPICAL PERFORMANCE

Attenuation vs Control Voltage at 25° C

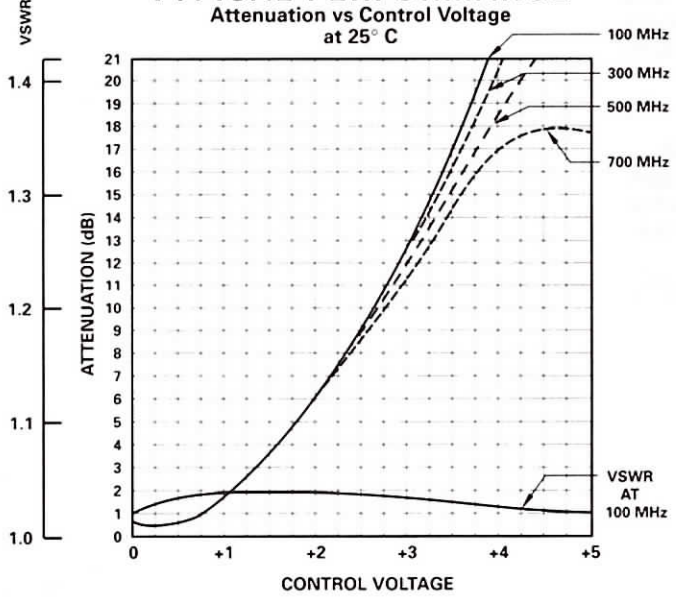

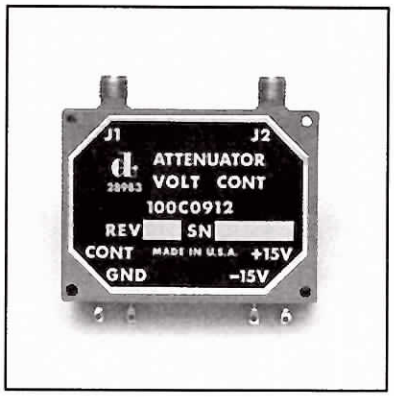

MODEL NUMBER 100C0912

PIN Diode Linear VCA

FEATURES

- 20-300 MHz
- 53 dB Linear Range
- SMA Connectors
- See DA0098 For DIP Version

VCA

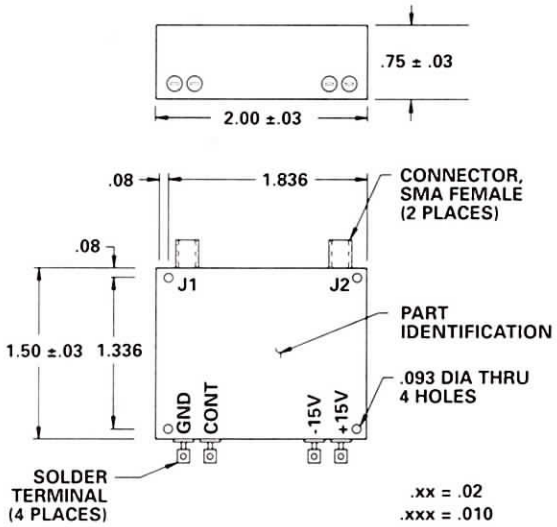

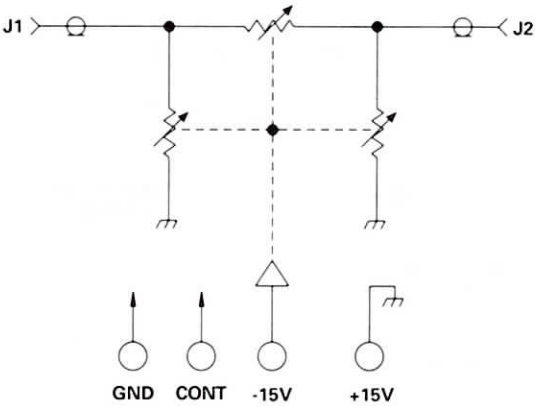

TYPICAL PERFORMANCE

Attenuation vs Control Voltage at 25° C

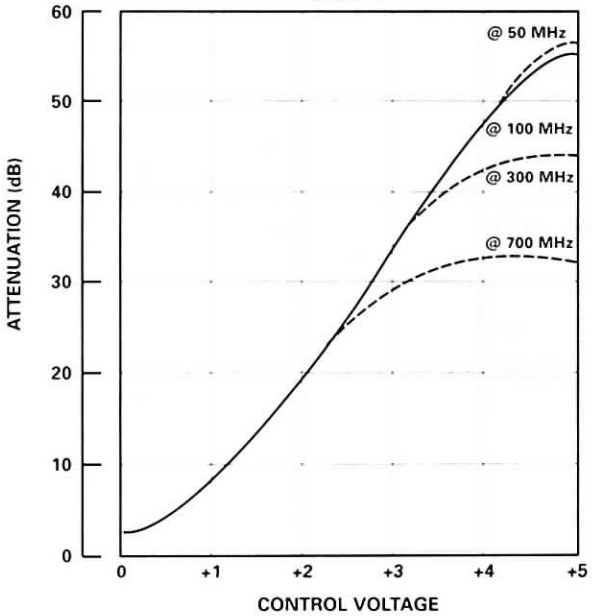

GUARANTEED PERFORMANCE

Parameter		Min	Typ	Max	Units	Conditions
Operating Frequency		20		300	MHz	
DC Current			42	65	mA	At +15 VDC Supply
			80	110	mA	At -15 VDC Supply
Control Current				0.5	mA	0 V = Insertion Loss
(10k ohm input impedance)						+5 V = Max. Atten.
Insertion Loss				2	dB	At 0 V
Attenuation	*Range*	40	52		dB	At 100 MHz
	Slope		15 ± 3		dB/V	
	Linearity		±2		dB	Best Straight Line Fit From IL +2 dB to 40 dB
VSWR				1.4/1		
Impedance			50		OHMS	
Slew Rate			6		dB/µs	
RF Power	*Operate*			+10	dBm	
	No Damage			+20	dBm	
Operating Temperature		-55	+25	+85	°C	TA

MODEL NUMBER 100C1521	PIN Diode Linear VCA

FEATURES

- 50-1300 MHz
- 40 dB Linear Range
- 1.3 dB Insertion Loss
- ±2 dB Linearity
- SMA Connectors
- See DA0243 For Flatpack Version

VCA

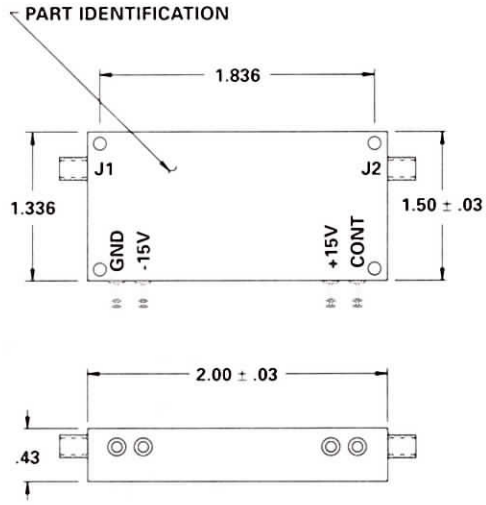

.xx = .02
.xxx = .010

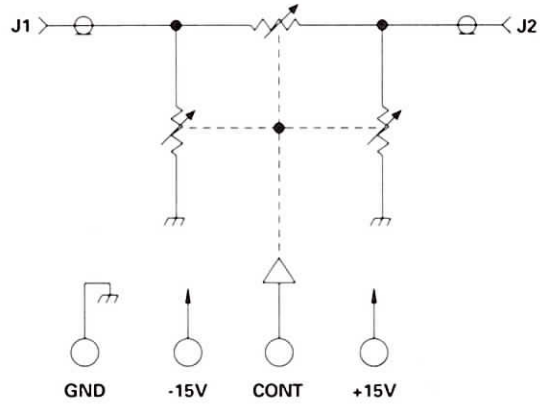

TYPICAL PERFORMANCE

Attenuation vs Control Voltage
at 500 MHz

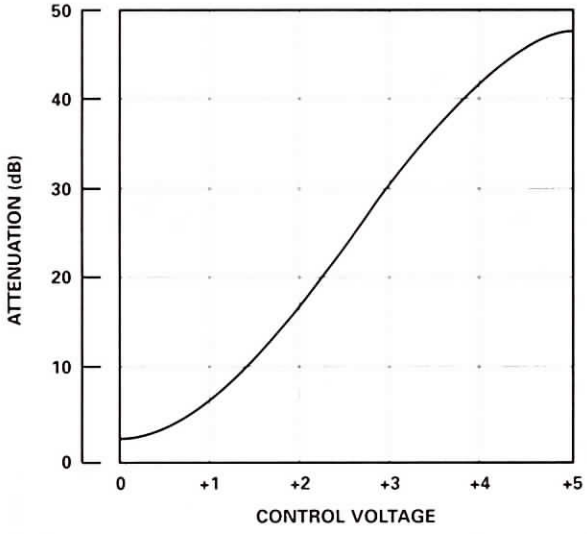

GUARANTEED PERFORMANCE

Parameter		Min	Typ	Max	Units	Conditions
Operating Frequency		50		1300	MHz	
DC Current			60		mA	At +15 VDC Supply
			80		mA	At -15 VDC Supply
Control Current				1.0	mA	0 V = I.L
						+5 V = Max. Atten.
Insertion Loss			1.3	2.0	dB	50 - 500 MHz
			1.4	3.0	dB	500 - 1100 MHz
			2.0	3.5	dB	1100 - 1300 MHz
Attenuation	*Range*	40			dB	50 - 500 MHz
		30			dB	500 - 1100 MHz
		25			dB	1100 - 1300 MHz
	Slope		13±3		dB/V	
	Linearity		±2		dB	Best Straight Line Fit From:
						IL +2 dB to:
			35			50 - 500 MHz
			25			500 - 1100 MHz
			20			1100 - 1300 MHz
VSWR				1.25/1		50 - 500 MHz
				1.50/1		500 - 1300 MHz
Impedance			50		OHMS	
Slew Rate			3		dB/µs	
Intercept Points	*2nd*		+80		dBm	
	3rd		+35		dBm	
RF Power	*Operate*			+10	dBm	
Operating Temperature		-55	+25	+85	°C	TA

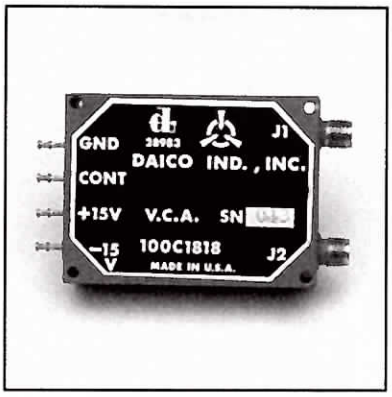

MODEL NUMBER 100C1575

Phase Compensated Linear PIN Diode VCA

FEATURES

- 150-250 MHz
- 48 dB Linear Range
- Constant Phase vs. Attenuation
- SMA Connectors

VCA

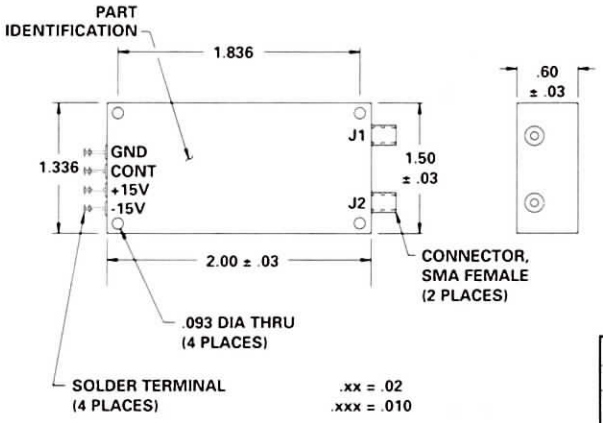

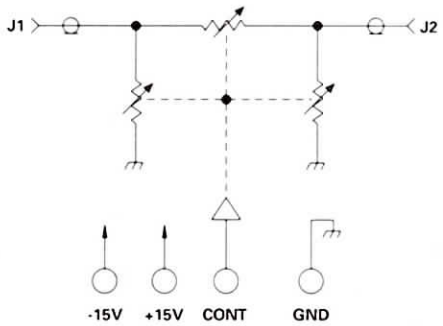

GUARANTEED PERFORMANCE

Parameter		Min	Typ	Max	Units	Conditions
Operating Frequency		150		250	MHz	
DC Current			40	70	mA	At +15 VDC Supply
			40	70	mA	At -15 VDC Supply
Control Current					mA	0 V = I.L +5 V = Max. Atten.
Insertion Loss			3	4	dB	
Attenuation	*Range*	40	48		dB	
	Slope	12	15	18	dB/V	
	Linearity			±2	dB	Best Straight Line Fit From IL +2 dB to 40 dB
Phase Stability				10	DEG	Over Specified Range
VSWR			1.1/1	1.25/1		
Impedance			50		OHMS	
Slew Rate			6		dB/µs	
RF Power	*Operate*			+15	dBm	
	No Damage			+20	dBm	
Operating Temperature		-55	+25	+85	°C	TA

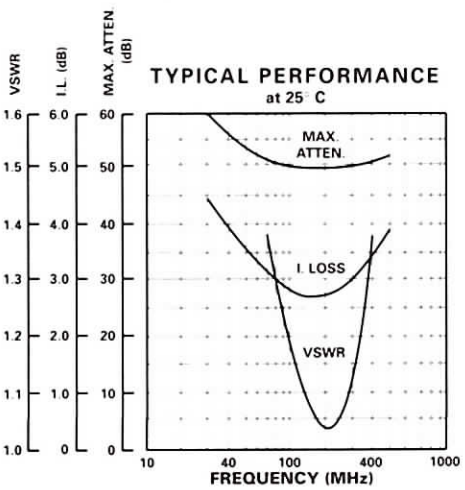

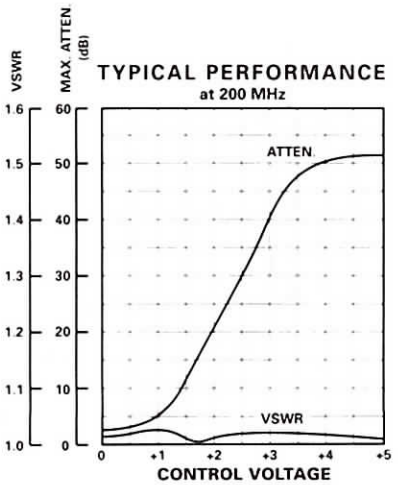

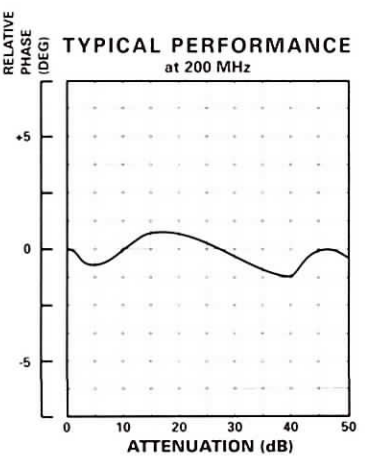

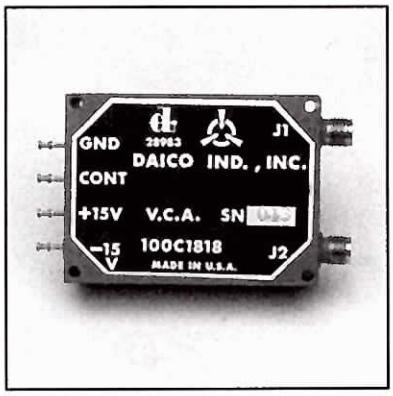

MODEL NUMBER 100C1818

Phase Compensated Linear PIN Diode VCA

FEATURES

- 30-150 MHz
- 40 dB Linear Range
- Constant Phase vs. Attenuation
- SMA Connectors

VCA

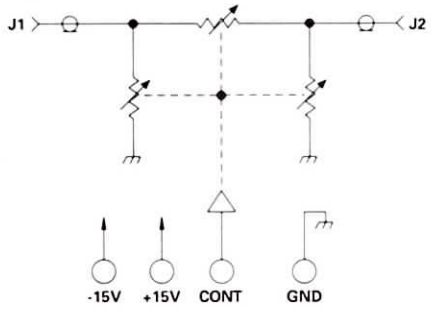

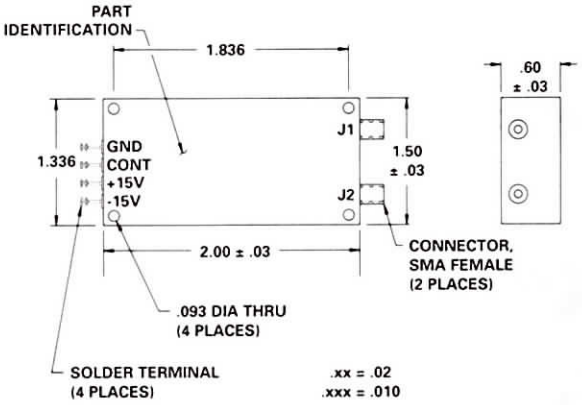

GUARANTEED PERFORMANCE

Parameter		Min	Typ	Max	Units	Conditions
Operating Frequency		30		150	MHz	
DC Current			47	70	mA	At +15 VDC Supply
			43	70	mA	At -15 VDC Supply
Insertion Loss			3	4	dB	
Attenuation	*Range*	40	50		dB	
	Slope	12	15	18	dB/V	
	Linearity			±2	dB	Best Straight Line Fit From IL +2 dB to 40 dB
Attenuation vs. Phase			±2.4	±5	DEG	Broadband
			±.23	±1	DEG	At 60±5 MHz
						25±5° C From 0 to 30 dB Atten.
VSWR			1.25/1	1.35/1		
Impedance			50		OHMS	
Slew Rate			6		dB/µs	
Intercept Points	*2nd*		+45		dBm	60 MHz / 87 MHz
	3rd		+28		dBm	60 MHz / 43.5 MHz
RF Power	*Operate*			+10	dBm	0.1 dB Compression
	No Damage			+20	dBm	
Operating Temperature		-55	+25	+85	°C	TA

Note- Control Configuration: 0 to +5 Volts (at 5K Nominal Input Impedance)

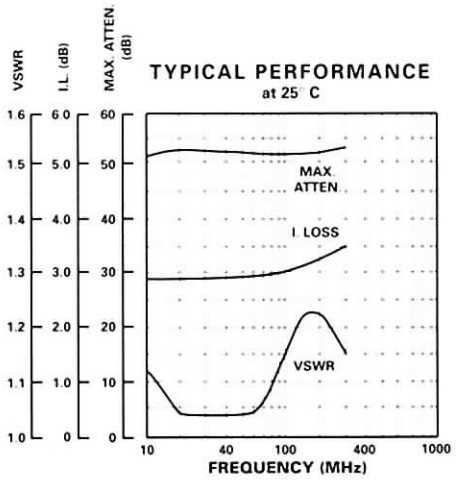

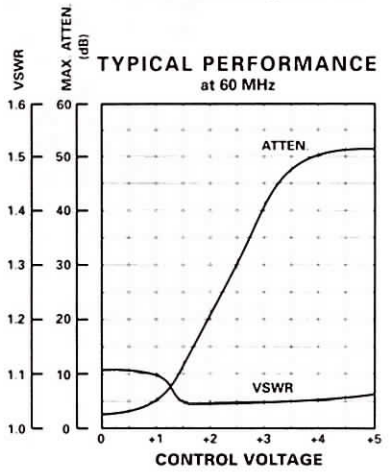

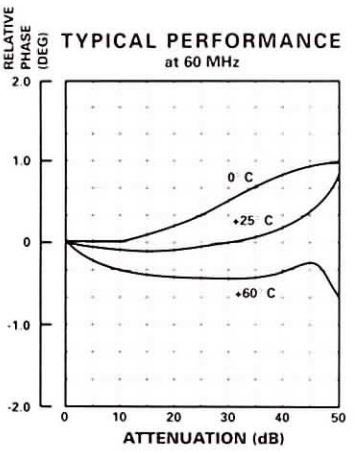

Bi-Phase Modulaors

- +17 d B m
- Broadband
- Low Insertion Loss
- Low Current
- Full Military Screening Available
  (See Page 281)

Phase Shifters

- GaAs MMIC, PIN Diode, Relay Types
- MIC & Connectorized
- Full Military Screening Available
  (See Page 281)

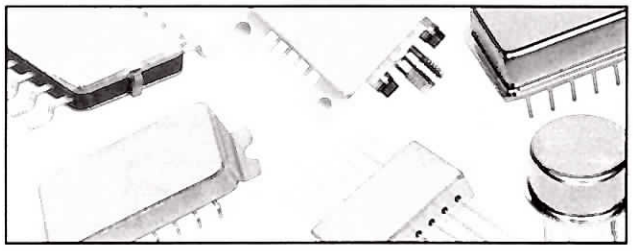

For additional products and information, please visit us at www.daico.com

Bi-Phase Modulator / Phase Shifter Specification Table

	Number of Sect.	Available LSB/Range Degrees	Spec Freq MHz	Part Number	Switching Speed nSec/Max	Insertion Loss dB Max/Typ	RF Power dBm	VSWR MAX	DC Power Volts	DC Power mA	Package	Page
BI-PHASE MODULATORS												
GaAs	-	0-180	10-500	DBP0938	70	2.5/1.8	+17	1.4	+5	2	12 Pin TO-8	246
GaAs	-	0-180	10-500	DBP0738	70	2.5/1.6	+17	1.4	+5	2	12 Pin SMP	247
GaAs	-	0-180	10-500	DPMB9058	70	2.5/1.8	+17	1.4	+5	2	SMA	248
PHASE SHIFTERS												
GaAs	1	0-180	1030-1110	DP0881	100	1.6/1.4	+18	1.35	+5	5	24 Pin DIP	249
	4	1.4-21	70	DPS45081	20000	3.5/2.4	+30	1.5	+5	50	38 Pin SM	254
	4	-	70	DPS45085	20000	4.5/3.61	+30	1.5	+5	50	38 Pin SM	*see website*
	4	1.4-189.8	500-1000	DPS42029	500	3.0/2.3	+13	1.22	+5	75	38 Pin DIP	251
	4	11.25-168.75	500-1000	DPS42028	500	3.0/2.1	+13	1.35	+5	100	38 Pin DIP	250
	4	22.5-337.5	1215-1400	CDP0827	500	2.5/2.18	+22	1.5	+5 -5	250 250	SMA	255
	4	22.5-337.5	1215-1400	CPS42126	350	3/2.4	+34 -15	1.5	+5 200	200	32 Pin DIP	252
	4	22.5/337.5	1215-1400	CPS42127	350	2.8/1.0	+10	1.5	+5 -15	250 200	32 Pin DIP	253
	4	22.5/337.5	1215-1400	CPS49092	350	2.8/1.0	+10	1.5	+5 -15	250 200	SMA	256
	4	22.5/337.5	1215-1400	CPS49093	350	3.25/1.75	+34	1.5	+5 -15	250 200	SMA	257
	5	1.41-43.6	100-300	DPS52005	530	3.0/2.5	+22	1.3	+5	100	38 Pin DIP	259
	5	11.25-348.75	2300-2410	DPS52181	100	8.0/6.5	+21	1.5	+5 -5	5 5	38 Pin DIP	260
GaAs	5	11.25-348.8	1010-1110	DP0891	100	7.5/5.4	+26	1.3	+5	10	38 Pin DIP	258
	6	5.7-354.4	30-300	100D0896	4000	4.0/2.6	+10	1.5	+5	170	SMA	263
	6	5.6-354.4	400-450	DP0921	150	7.0/6.2	+8	1.5	+5	30	38 Pin DIP	261
	6	5.6-354.4	1200-1600	CPS62036	30	7.5/7	+20 -5	1.6	+5 10	10	38 Pin DIP	262
	8	1.4-358.6	30-300	100D0898	4000	5.0/3.0	+10	1.5	+5	375	SMA	265
	8	1.4-358.6	100-300	DPS89032	800	4.0/3.75	+10	1.3	+5	200	SMA	266
	8	1.4-358.6	500-1000	DPS89082	500	5.0/4.4	+13	1.35	+15	200	SMA	267
	8	1.4-358.6	1665-1685	DPS86315	180	8/5.9	+10	1.6	+5	18	SMA	264

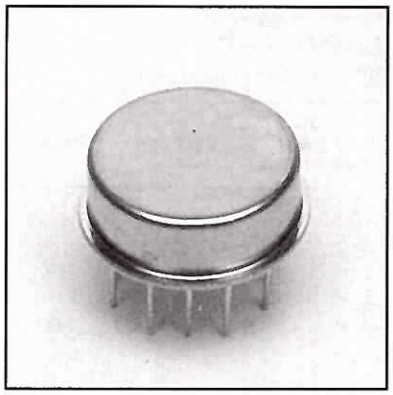

MODEL NUMBER
DPB0938

GaAs Bi-Phase Modulator

FEATURES

- 10-500 MHz
- ±1 Deg. Phase Accuracy
- 0.3 mA, +5 VDC
- 1.0 dB Insertion Loss
- 35 nSec Transition Time
- 50 nSec Switching Time
- 22 mV Transients
- TTL Control
- TO-8 Package

BPM

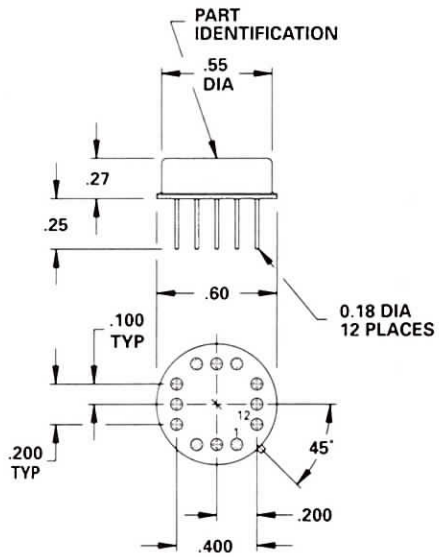

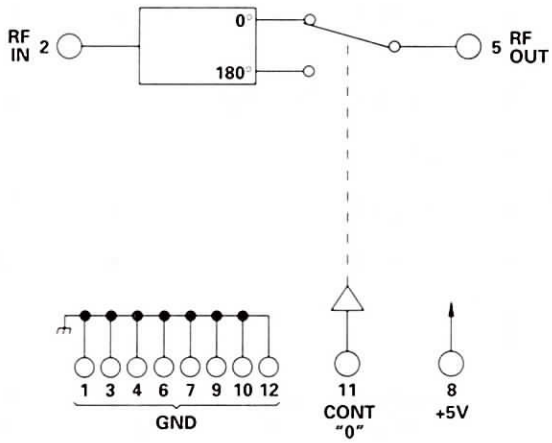

GUARANTEED PERFORMANCE

Parameter		Min	Typ	Max	Units	Conditions
Operating Frequency		10		500	MHz	
DC Current			0.3	2	mA	At +5 VDC Supply
Control Type			TTL			1 Line Logic "1" = Phase Reversal
Control Current	*High*		0	±20	µA	VIH = +3.0 V
	Low		0	±20	µA	VIL = +0.6 V
Insertion Loss			1.0	1.5	dB	10 - 100 MHz
			1.8	2.5	dB	100 - 500 MHz
Phase	*Step*		180		DEG	
	Accuracy		±1.0	±3.0	DEG	
VSWR			1.25/1	1.4/1		
Impedance			50		OHMS	
Switching Speed			50	70	nSec	50% TTL to 90% / 10% RF
Transition (Rise/Fall) Time			35	50	nSec	90% / 10% or 10% / 90% RF
Switching (Video) Transients			22	50	mV	Peak Value
Intercept Points	*2nd*		+80		dBm	70 MHz / 50 MHz
	3rd		+51		dBm	35 MHz / 50 MHz
RF Power	*Operate*		+17	+13	dBm	0.1 dB Compression
	No Damage			+23	dBm	
Operating Temperature		-55	+25	+85	°C	TA

TYPICAL PERFORMANCE
at 25°C

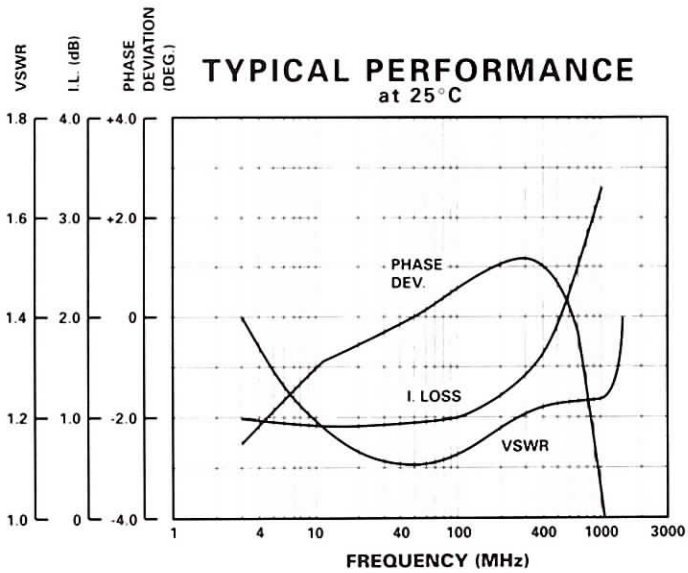

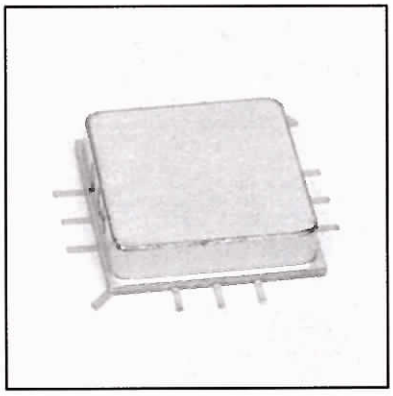

MODEL NUMBER DBP0738

GaAs Bi-Phase Modulator

FEATURES

- 10-500 MHz
- ±1 Deg. Phase Accuracy
- 0.3 mA, +5 VDC
- 1.0 dB Insertion Loss
- 35 nSec Transition Time
- 50 nSec Switching Speed
- 22 mV Transients
- TTL Control
- .530 Sq. Surface Mount Package

BPM

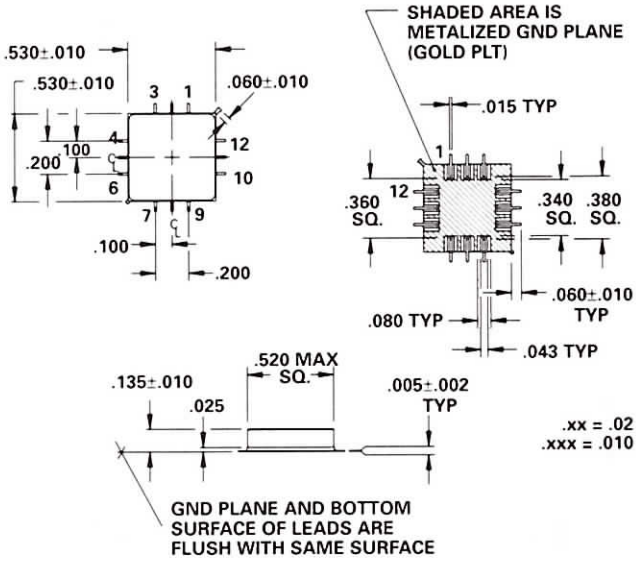

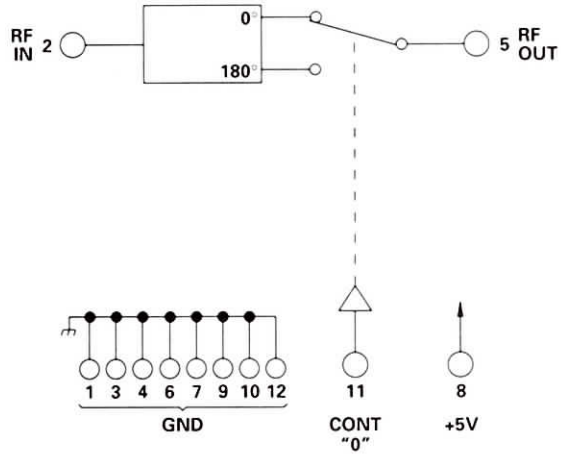

GUARANTEED PERFORMANCE

Parameter		Min	Typ	Max	Units	Conditions
Operating Frequency		10		500	MHz	
DC Current			0.3	2.0	mA	At +5 VDC Supply
Control Type			TTL			1 Line Logic "1" = Phase Reversal
Control Current	*High*		0	±20	µA	VIH = +3.0 V
	Low		0	+20	µA	VIL = +0.6 V
Insertion Loss			1.0	1.5	dB	10 - 100 MHz
			1.6	2.5	dB	100 - 500 MHz
Phase	*Step*		180		DEG	
	Accuracy		±1.0	±3.0	DEG	
VSWR			1.28/1	1.4/1		
Impedance			50		OHMS	
Switching Speed			50	70	nSec	50% TTL to 90% / 10% RF
Transition (Rise/Fall) Time			35	50	nSec	90% / 10% or 10% / 90% RF
Switching (Video) Transients			22	50	mV	Peak Value
Intercept Points	*2nd*		+80		dBm	70 MHz / 50 MHz
	3rd		+51		dBm	35 MHz / 50 MHz
RF Power	*Operate*		+17	+13	dBm	0.1 dB Compression
	No Damage			+23	dBm	
Operating Temperature		-55	+25	+85	°C	TA

TYPICAL PERFORMANCE
at 25°C

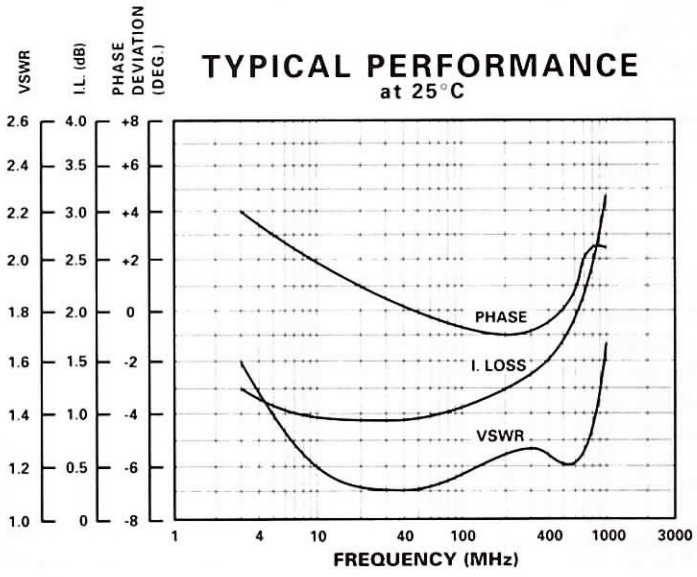

MODEL NUMBER DPMB9058	GaAs Bi-Phase Modulator

FEATURES

- 10-500 MHz
- ±1 Deg. Phase Accuracy
- 0.3 mA, +5 VDC
- 1.0 dB Insertion Loss
- +17 dBm 0.1 dB Compression
- 35 nSec Transition Time
- 50 nSec Switching Time
- TTL Control
- See DBP0938 For TO-8 Version

BPM

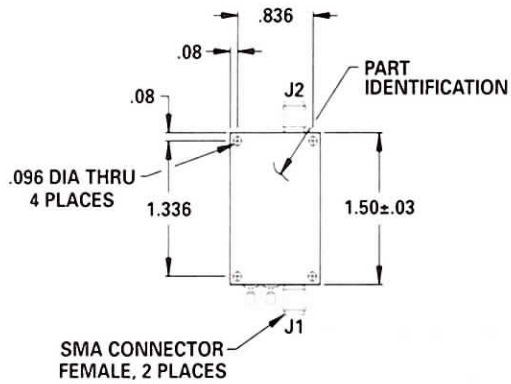

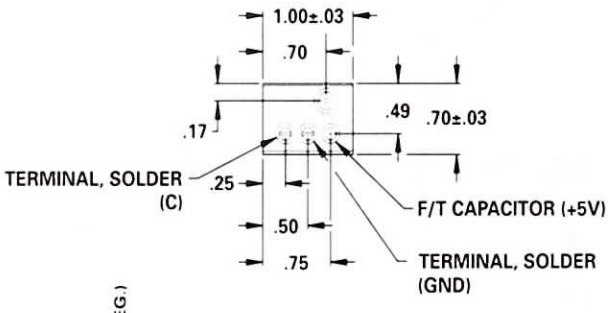

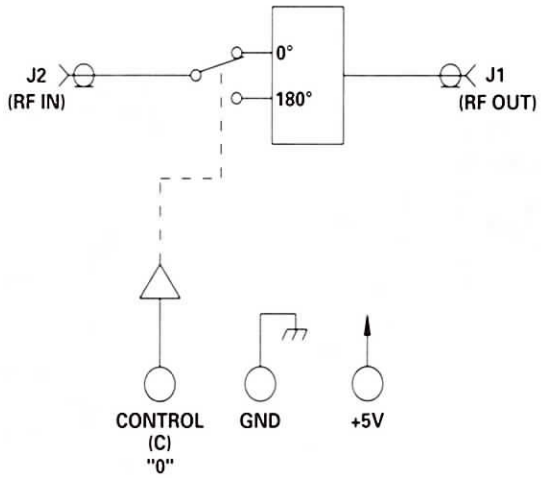

TYPICAL PERFORMANCE
at 25°C

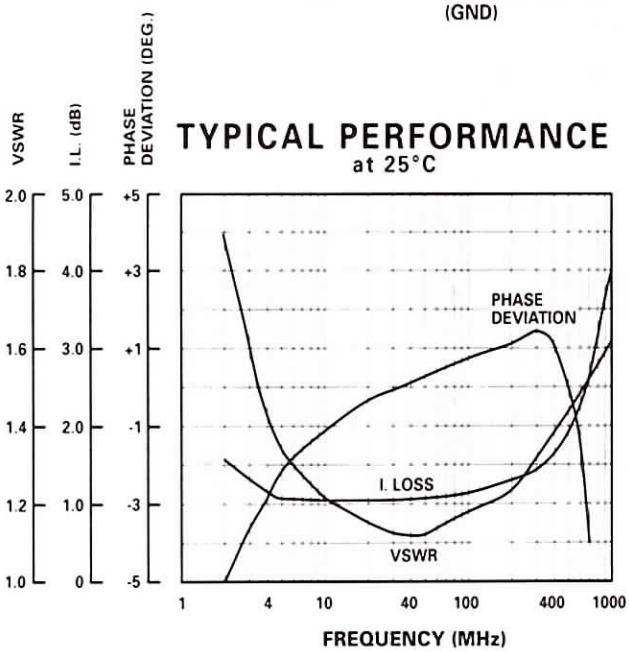

GUARANTEED PERFORMANCE

Parameter		Min	Typ	Max	Units	Conditions
Operating Frequency		10		500	MHz	
DC Current			0.3	2.0	mA	At +5 VDC Supply
Control Type			TTL			1 Line
						Logic "1" = Phase Reversal
Control Current	*High*		0	±20	µA	VIH = +3.0 V
	Low		0	±20	µA	VIL = +0.6 V
Insertion Loss			1.0	1.5	dB	10 - 100 MHz
			1.8	2.5	dB	100 - 500 MHz
Phase	*Step*		180		DEG	
	Accuracy		±1.0	±3.0	DEG	
VSWR			1.25/1	1.5/1		
Impedance			50		OHMS	
Switching Speed			50	70	nSec	50% TTL to 90% / 10% RF
Transition (Rise/Fall) Time			35	50	nSec	10% / 90% or 90% / 10% RF
Switching (Video) Transients			22	50	mV	Peak Value
Intercept Points	*2nd*		+80		dBm	70 MHz / 50 MHz
	3rd		+47		dBm	35 MHz / 50 MHz
RF Power	*Operate*		+15	+13	dBm	0.1 dB Compression
	No Damage			+23	dBm	
Operating Temperature		-55	+25	+85	°C	TA

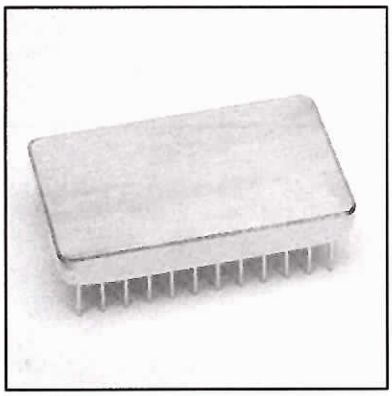

MODEL NUMBER DP0881

GaAs 1 Section Phase Shifter

FEATURES

- 1030-1110 MHz
- ±3.0 Deg. Phase Accuracy
- 0.2 mA @ +5 VDC
- Constant Insertion Loss
- 26 nSec Switching Speed
- TTL Control
- 24 Pin DIP

1 BIT

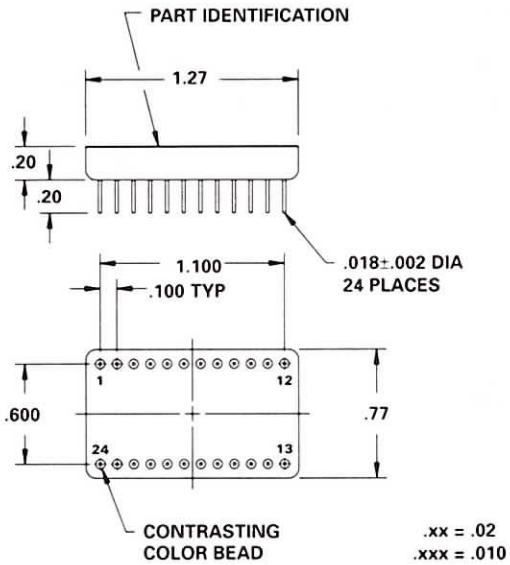

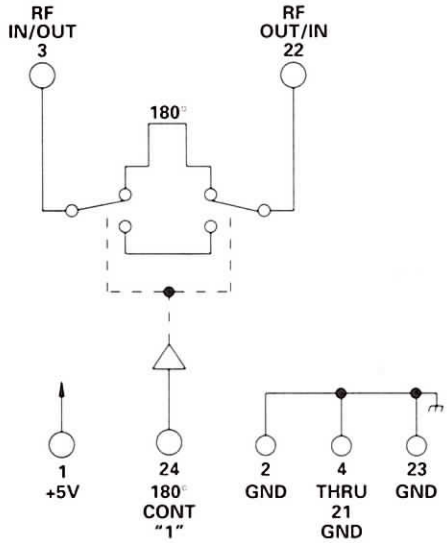

TYPICAL PERFORMANCE
at 25°C

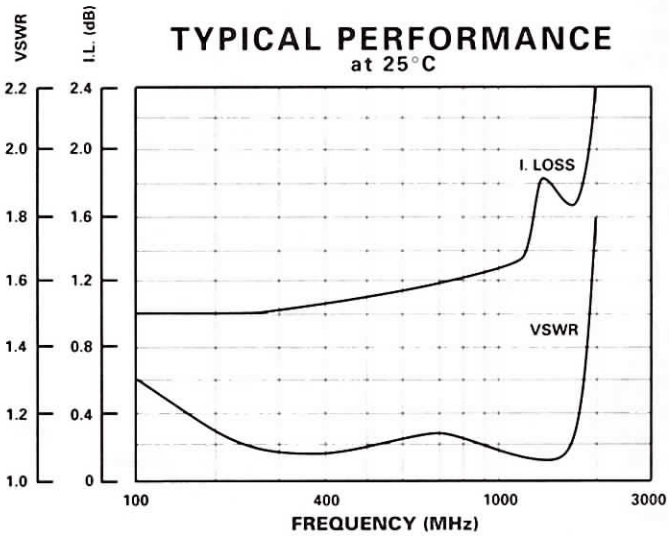

GUARANTEED PERFORMANCE

Parameter		Min	Typ	Max	Units	Conditions
Operating Frequency		1030		1110	MHz	
DC Current			0.2	5	mA	At +5 VDC ±10% Supply
Control Type			TTL			1 Line Logic "0" = Thru Logic "1" = Phase Shift
Control Current	*High*		0	±20	µA	VIH = +2.7 V
	Low		0	±20	µA	VIL = +0.5 V
Insertion Loss			1.4	1.6	dB	
	Stability		-0.2	±0.5	dB	
Insertion Phase in Thru Cond.		-148	-151	-154	DEG	In T/F 200C2437
Phase Shift	*LSB*		0		DEG	At Fc
	Range	0		180	DEG	180
	Accuracy		+0.5	±3	DEG	
VSWR			1.1/1	1.3/1		
Impedance			50		OHMS	
Switching Speed			26	100	nSec	50% TTL to 90% / 10% RF
Transition (Rise/Fall) Time			18		nSec	90% / 10% or 10% / 90% RF
Switching (Video) Transients			40		mV	Peak Value
Intercept Points	*2nd*		+88		dBm	214 MHz / 127 MHz
	3rd		+46		dBm	107 MHz / 127 MHz
RF Power	*Operate*		+18	+15	dBm	0.1 dB Compression
	No Damage			+27	dBm	
Operating Temperature		-55	+25	+70	°C	TA

DAICO *Industries*

310.507.3242 • FAX 310.507.5701 • www.daico.com

MODEL NUMBER DPS42028

Phase Shifter 4 Section

FEATURES

- 500-1000 MHz
- Multiple Bit Phase Shifter in Small Package
- 38 Pin DIP

4 BIT

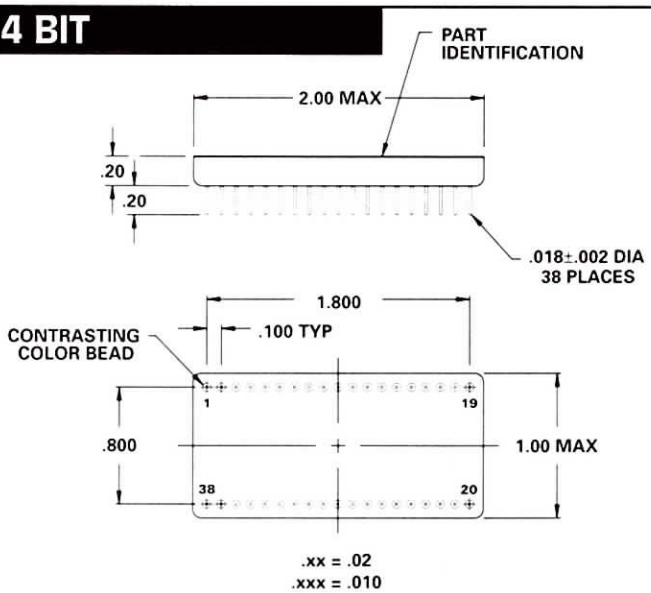

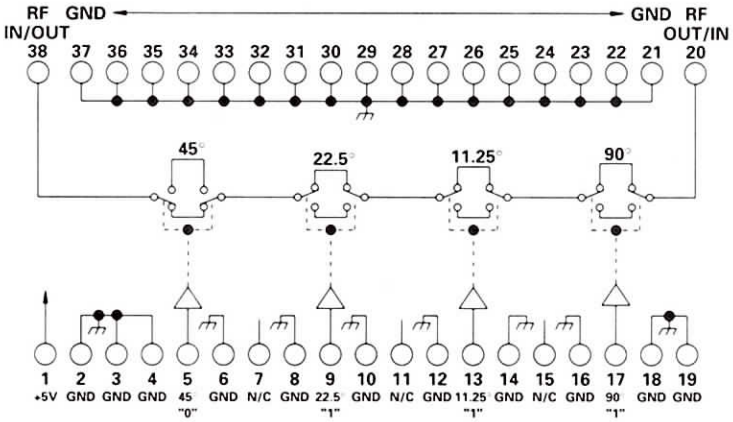

TYPICAL PERFORMANCE

at 25°C

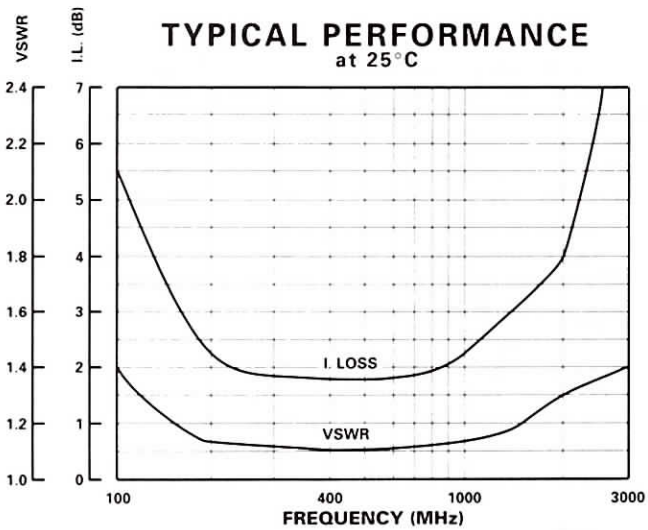

GUARANTEED PERFORMANCE

Parameter		Min	Typ	Max	Units	Conditions
Operating Frequency		500	700	1000	MHz	
DC Current			47	100	mA	At +5 VDC Supply
Control Type			TTL			4 Line Logic "0" = Thru Logic "1" = Phase
Control Current	*High*		±10		µA	VIH = +2.7 V
	Low		±10		µA	VIL = +0.5 V
Insertion Loss			2.1	3.0	dB	
Phase	*LSB*		11.25		DEG	
	Range	0		168.75	DEG	11.25, 22.5, 45, 90 DEG At 700 MHz
	Accuracy			±5	DEG	Any One Bit
				±10	DEG	Any Combination
VSWR			1.10/1	1.35/1		
Impedance			50		OHMS	
Switching Speed			140	500	nSec	50% TTL to 90% / 10% RF
Transition (Rise/Fall) Time			70		nSec	90% / 10% or 10% / 90% RF
Switching (Video) Transients			300		mV	Peak Value
Intercept Points	*2nd*		+71		dBm	300 MHz / 200 MHz
	3rd		+32		dBm	350 MHz / 200 MHz
RF Power	*Operate*		+13	+10	dBm	0.1 dB Compression
	No Damage			+23	dBm	
Operating Temperature		-55	+25	+85	°C	TA

DAICO *Industries*

310.507.3242 • FAX 310.507.5701 • www.daico.com

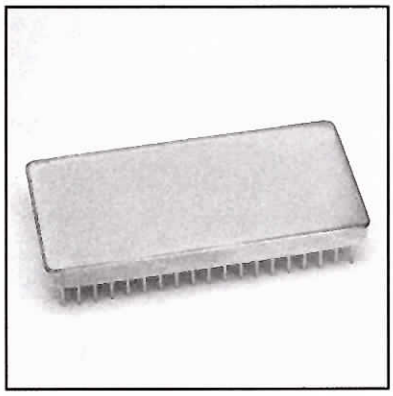

MODEL NUMBER DPS42029

Phase Shifter 4 Section

FEATURES

- 500-1000 MHz
- Multiple Bit Phase Shifter in Small Package
- 38 Pin DIP

4 BIT

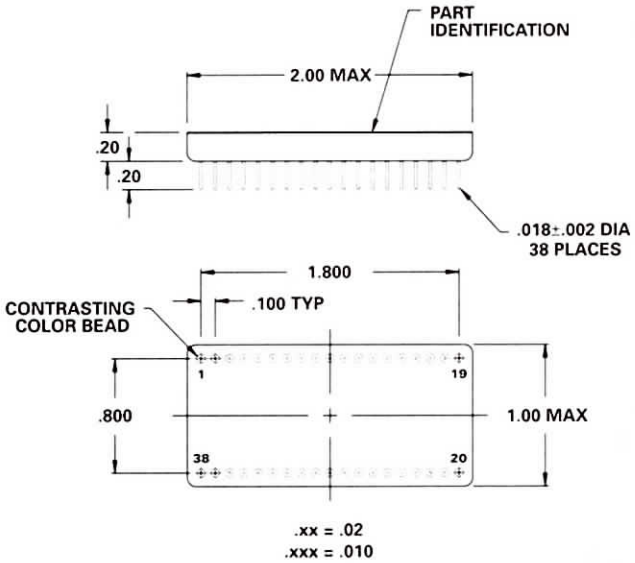

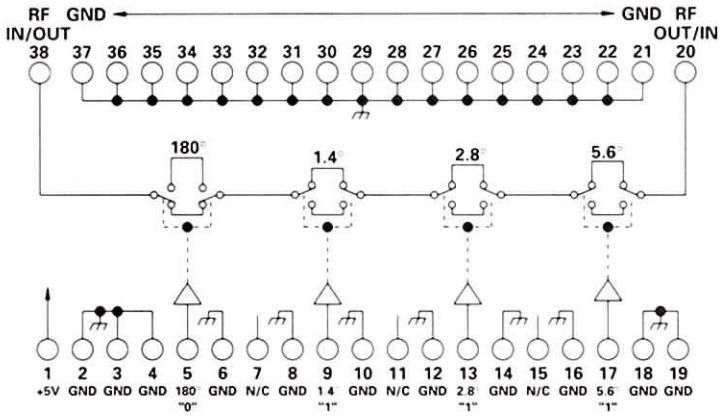

TYPICAL PERFORMANCE
at 25°C

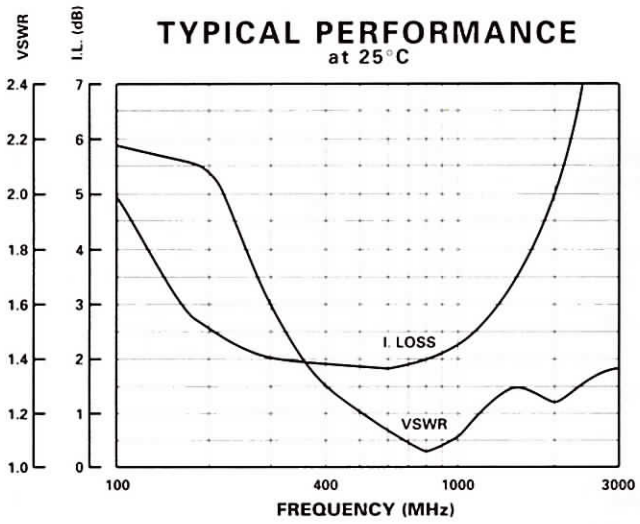

GUARANTEED PERFORMANCE

Parameter		Min	Typ	Max	Units	Conditions
Operating Frequency		500	700	1000	MHz	
DC Current			47	75	mA	At +5 VDC Supply
Control Type			TTL			4 Line
						Logic "0" = Thru
						Logic "1" = Phase
Control Current	*High*		±10		µA	VIH = +2.7 V
	Low		±10		µA	VIL = +0.5 V
Insertion Loss			2.3	3.0	dB	
Phase	*LSB*		1.4		DEG	
	Range	0		189.8	DEG	1.4, 2.8, 5.6, 180 DEG
						At 700 MHz
	Accuracy			±0.7	DEG	Any One Bit } +25 C
				±0.7	DEG	Any Combination } +25 C
				±2.0	DEG	Any One Bit } Over Temp
				±2.5	DEG	Any Combination } Over Temp
VSWR				1.2/1		
Impedance			50		OHMS	
Switching Speed			130	500	nSec	50% TTL to 90% / 10% RF
Transition (Rise/Fall) Time			60		nSec	90% / 10% or 10% / 90% RF
Switching (Video) Transients			235		mV	Peak Value
Intercept Points	*2nd*		+67		dBm	300 MHz / 200 MHz
	3rd		+32		dBm	350 MHz / 200 MHz
RF Power	*Operate*		+13	+10	dBm	0.1 dB Compression
	No Damage			+23	dBm	
Operating Temperature		-55	+25	+85	C	TA

DAICO *Industries*

310.507.3242 • FAX 310.507.5701 • www.daico.com

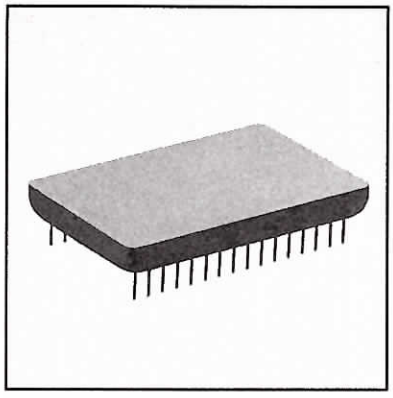

MODEL NUMBER
CPS42126

Phase Shifter 4 Section

FEATURES

- 1215 - 1400 MHz
- 22.5° LSB, 337.5° Range
- TTL Driver
- +42 dBm 3rd Order IP

4 BIT

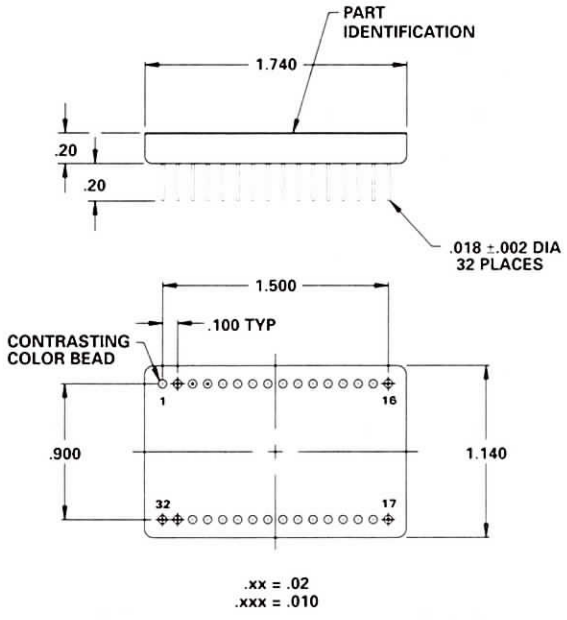

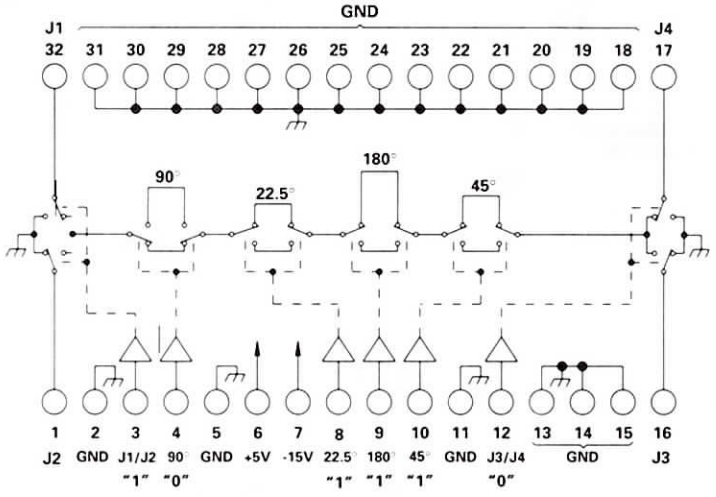

TYPICAL PERFORMANCE
at 25°C

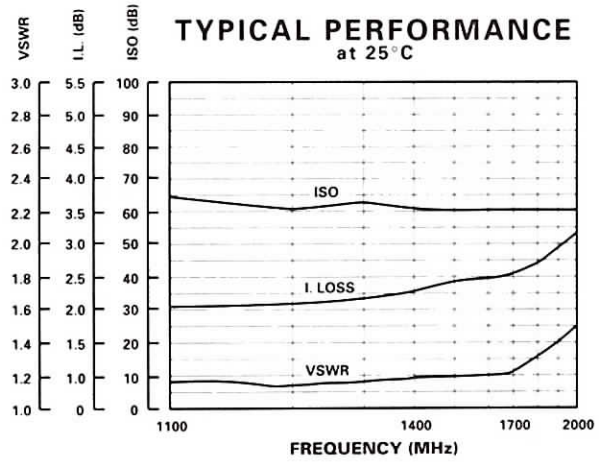

GUARANTEED PERFORMANCE

Parameter		Min	Typ	Max	Units	Conditions
Operating Frequency		1215		1400	MHz	
DC Current			34	200	mA	At +5 VDC Supply
			108	200	mA	At -15 VCD Supply
Control Type			TTL			6 Line
						Logic "0" = Refer Phase
						Logic "1" = Phase Shift
Control Current	*High*		0	±20	µA	VIH = +2.7V
	Low		0	±20	µA	VIL = +0.8 V
Insertion Loss			2.4	3.0	dB	At 25° C
Phase:	*LSB*		22.5		DEG	At 1215 MHz
	Range		337.5		DEG	
	Accuracy			±6	DEG	
	Linearity		1.5	3.0	DEG	
Isolation		40	60		dB	J1-J4
VSWR			1.15/1	1.5/1	DEG	1215 - 1400 MHz
Impedance			50		OHMS	
Time Delay		.8	1.0	1.2	nSEC	
Switching Speed			.6	3.5	µSEC	50% TTL to 90% / 10% RF
Transition (Rise/Fall) Time			.05		µSEC	10% / 90% or 90% / 10% RF
Switching (Video) Transients			36		mV	Peak Value
Intercept Points	*2nd*		+63		dBm	2000 / 785 MHz
	3rd		+42		dBm	1000 / 785 MHz
RF Power	*Operate*		+36	+34	dBm	0.1 dB Compression
	No Damage			+30	dBm	
Operating Temperature		-54	+25	+80	°C	TA

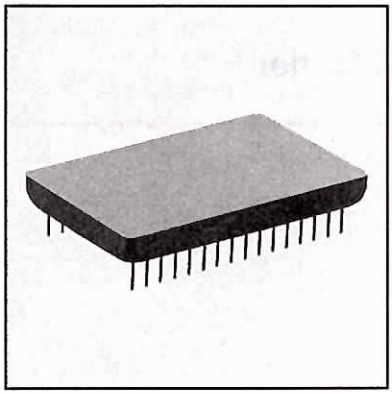

MODEL NUMBER
CPS42127

Phase Shifter 4 Section

FEATURES

- 1215 - 1400 MHz
- 22.5° LSB, 337.5° Range
- TTL Driver

4 BIT

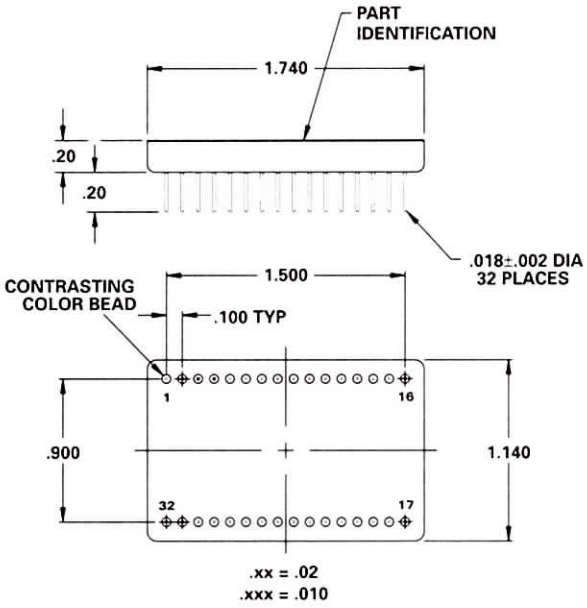

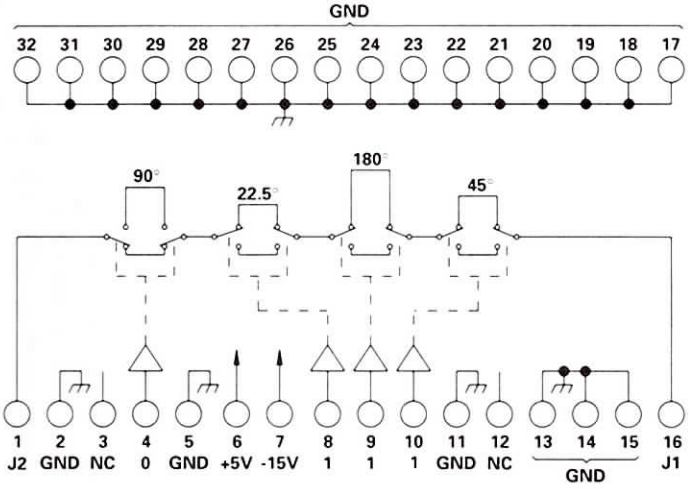

NC = NO CONNECTION

TYPICAL PERFORMANCE
at 25°C

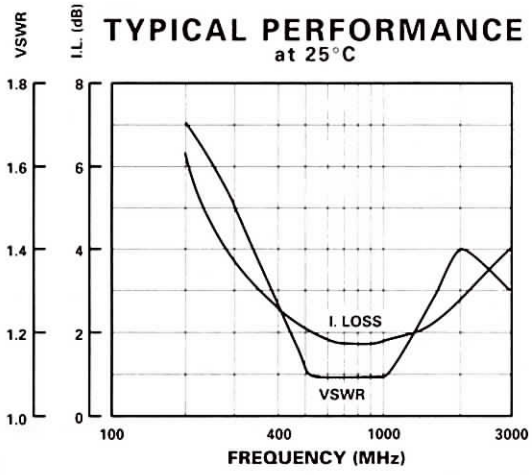

GUARANTEED PERFORMANCE

Parameter		Min	Typ	Max	Units	Conditions
Operating Frequency		1215		1400	MHz	
DC Current			8	250	mA	At +5 VDC Supply
			75	200	mA	At -15 VCD Supply
Control Type			TTL			4 Lines
						Logic "0" = Refer Phase
						Logic "1" = Phase Shift
Control Current	*High*		0	±20	µA	VIH = +5.0V
	Low		0	±20	µA	VIL = +0.8 V
Insertion Loss		1.05	1.9	2.55	dB	At 20° C
		0.80		2.80	dB	At Temperature Extremes
Phase:	*Steps*		22.5		DEG	22.5, 45, 90, 180
	Range		337.5		DEG	At 1215 MHz
	Accuracy			±6	DEG	
	Linearity		1.5	3.0	DEG	
VSWR			1.25/1	1.5/1		1215 - 1400 MHz
Impedance			50		OHMS	
Time Delay		650	850	1.050	SEC	
Switching Speed			.660	3.5	µSEC	50% TTL to 90% / 10% RF
Transition (Rise/Fall) Time			.043		µSEC	10% / 90% or 90% / 10% RF
Switching (Video) Transients			36		mV	Peak Value
Intercept Points	*2nd*		+64		dBm	575 / 400 MHz
	3rd		+42		dBm	287.5 / 400 MHz
RF Power	*Operate*		+28	+10	dBm	0.1 dB Compression
	No Damage			+30	dBm	
Operating Temperature		-54	+25	+80	°C	TA

MODEL NUMBER DPS45081

Phase Shifter 4 Section

FEATURES

- 70 MHz
- 1.4° LSB
- Surface Mount
- 2.4 dB Insertion Loss

4 BIT

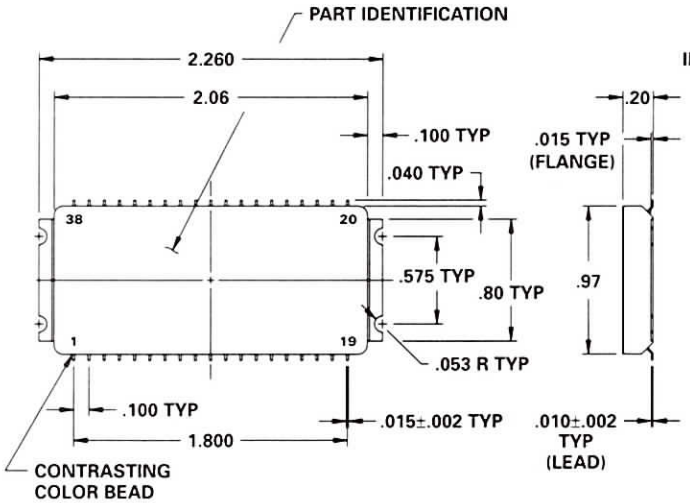

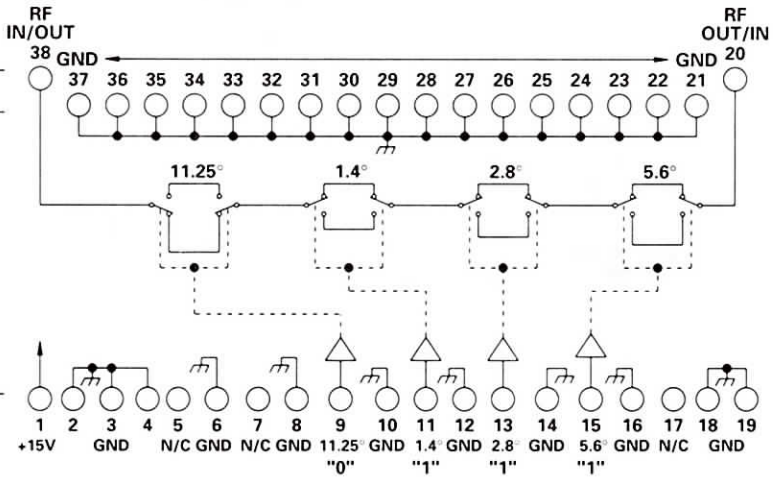

TYPICAL PERFORMANCE at 25°C

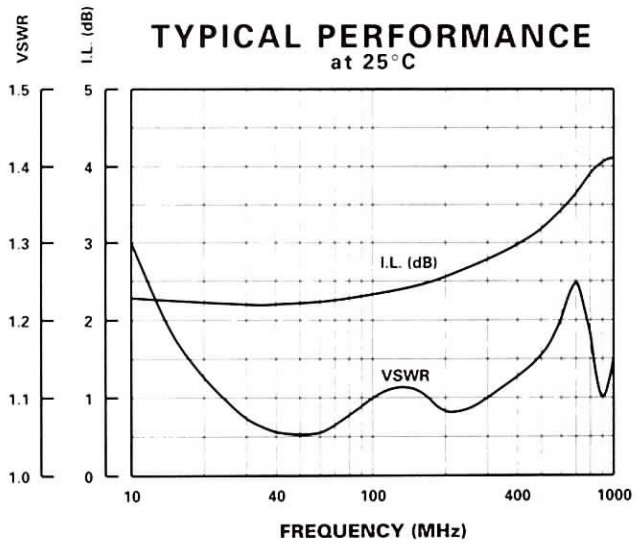

GUARANTEED PERFORMANCE

Parameter		Min	Typ	Max	Units	Conditions
Operating Frequency			70		MHz	
DC Current			14	50	mA	At +15 VDC Supply
Control Type			TTL			4 Line Logic "0" = Thru Logic "1" = Phase
Control Current	*High*		0.03	±10	µA	VIH = +2.7 V
	Low		0.03	±10	µA	VIL = +0.5 V
Insertion Loss			2.4	3.5	dB	
Phase	*LSB*		1.4		DEG	
	Range	0		21.0	DEG	1.4, 2.8, 5.6, 11.25 DEG
	Accuracy			±1	DEG	
VSWR			1.1/1	1.5/1		
Impedance			50		OHMS	
Switching Speed			8.0	20	µSec	50% TTL to 90% / 10% RF
Transition (Rise/Fall) Time			1.0		µSec	10% / 90% or 90% / 10% RF
Switching (Video) Transients			26		mV	Peak Value
Intercept Points	*2nd*		+53		dBm	
	3rd		+25		dBm	
RF Power	*Operate*		+22	+10	dBm	0.1 dB Compression
	No Damage			+30	dBm	
Operating Temperature		+14	+25	+36	°C	TA

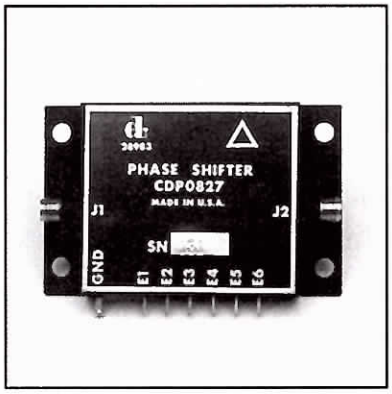

MODEL NUMBER CPS0827

Phase Shifter 4 Section

FEATURES

- 1215-1400 MHz
- 22.5° LSB, 337.5° Range
- +35 dBm 3rd Order Intercept
- TTL Driver
- Replaceable SMA Connectors

4 BIT

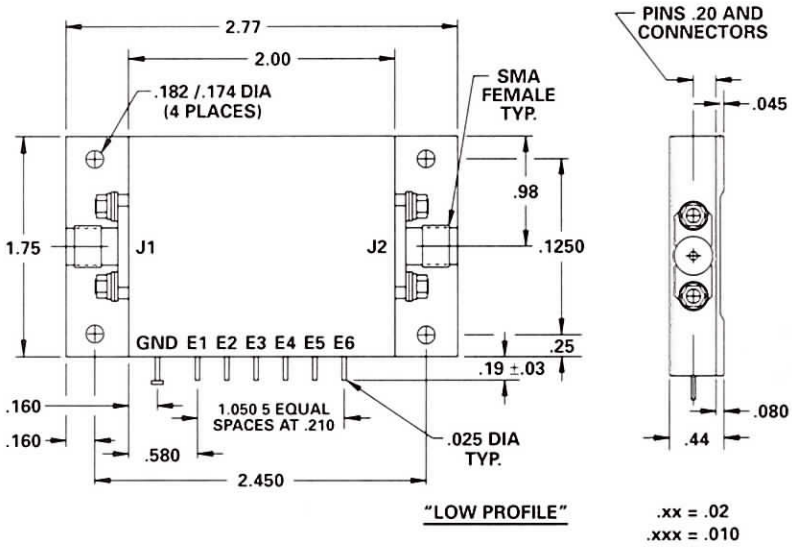

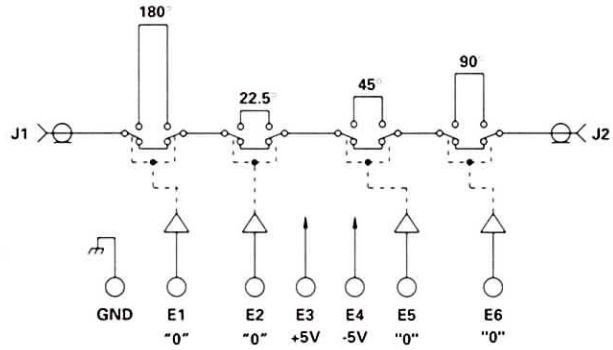

TYPICAL PERFORMANCE
at 25°C

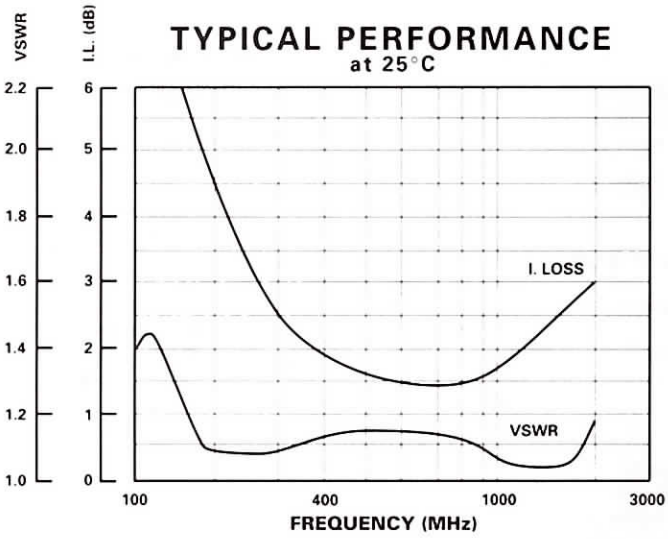

GUARANTEED PERFORMANCE

Parameter		Min	Typ	Max	Units	Conditions
Operating Frequency		1215		1400	MHz	
DC Current			83	250	mA	At +5 VDC Supply
			40	250	mA	At -5 VDC Supply
Control Type			TTL			4 Line
						Logic "0" = Reference
						Logic "1" = Phase Shift
Control Current	*High*		0	±20	µA	VIH = +2.7 V
	Low		0	±20	µA	VIL = +0.5 V
Insertion Loss		1.0	2.18	2.50	dB	At +25° C
		0.75	2.47	2.75	dB	At Temperature Extremes
Amplitude Stability			0.35	0.60	dB	Vs. Phase Shift
Time Delay		500	850	900	pSec	
Phase	*LSB*		22.5		DEG	
	Range	0		337.5	DEG	22.5, 45, 90, 180 At 1215 MHz
	Accuracy			±10	DEG	
	Linearity		1.5	3.0	DEG	
VSWR			1.2/1	1.5/1		
Impedance			50		OHMS	
Switching Speed			145	500	nSec	50% TTL to 90% / 10% RF
Transition (Rise/Fall) Time			105		nSec	90% / 10% or 10% / 90% RF
Switching (Video) Transients			135		mV	Peak Value
Intercept Points	*2nd*		+60		dBm	575 MHz / 400 MHz
	3rd		+35		dBm	287.5 MHz / 400 MHz
RF Power	*Operate*		+22	+20	dBm	0.2 dB Compression
	No Damage			+30	dBm	
Operating Temperature		-54	+25	+80	°C	TA

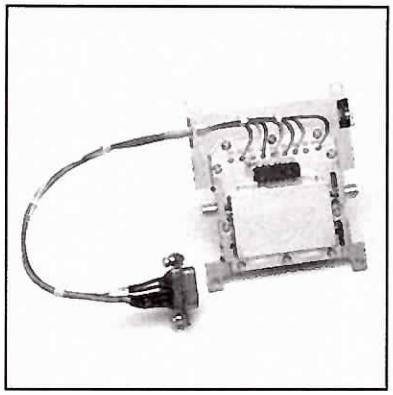

MODEL NUMBER CPS49092

Phase Shifter 4 Section

FEATURES

- 1215-1400 MHz
- 22.5° LSB, 337.5° Range
- +43 dBm 3rd Order Intercept
- TTL Driver
- +28 dBm, 0.1 dB Compression

4 BIT

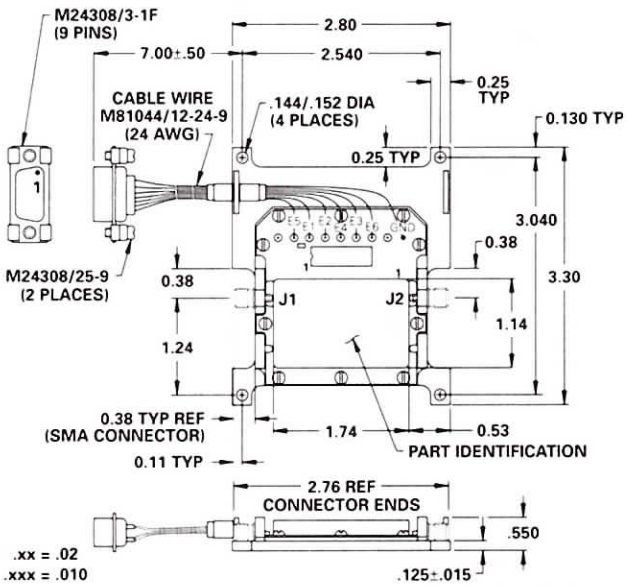

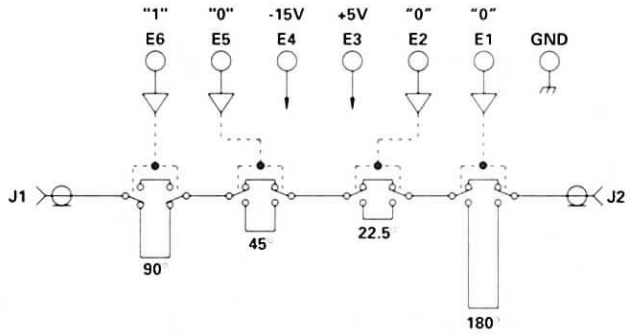

P1 PIN NO.	BD PIN NO.	FUNCTION
1	GND	GROUND
2	E3	+5V
3	E4	-15V
4	E1	180
5	E6	90
6	E5	45
7	E2	22.5
8	-	N/C
9	-	N/C

TYPICAL PERFORMANCE
at 25°C

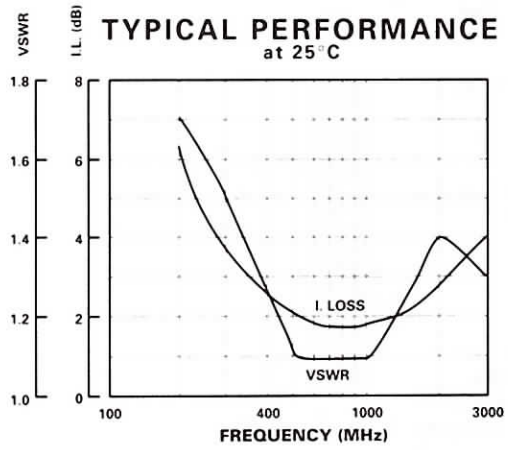

GUARANTEED PERFORMANCE

Parameter		Min	Typ	Max	Units	Conditions
Operating Frequency		1215		1400	MHz	
DC Current			12	250	mA	At +5 VDC Supply
			75	200	mA	At -15 VCD Supply
Control Type			TTL			4 Line
						Logic "0" = Refer Phase
						Logic "1" = Phase Shift
Control Current	*High*		.1	±20	µA	VIH = +5.0V
	Low		.1	±20	µA	VIL = +0.8 V
Insertion Loss		1.05	1.9	2.55	dB	At 25° C
		0.80		2.80	dB	At Temperature Extremes
Phase:	*Steps*		22.5		DEG	22.5, 45, 90, 180
	Range		337.5		DEG	At 1215 MHz
	Accuracy			±6	DEG	
	Linearity		1.5	3.0	DEG	
VSWR			1.25/1	1.5/1		1215 - 1400 MHz
Impedance			50		OHMS	
Time Delay		650	850	1.050	µSEC	
Switching Speed			.660	3.5	µSEC	50% TTL to 90% / 10% RF
Transition (Rise/Fall) Time			.043		µSEC	10% / 90% or 90% / 10% RF
Switching (Video) Transients			36		mV	Peak Value
Intercept Points	*2nd*		+64		dBm	575 / 400 MHz
	3rd		+42		dBm	287.5 / 400 MHz
RF Power	*Operate*		+28	+10	dBm	0.1 dB Compression
	No Damage			+30	dBm	
Operating Temperature		-54	+25	+80	C	TA

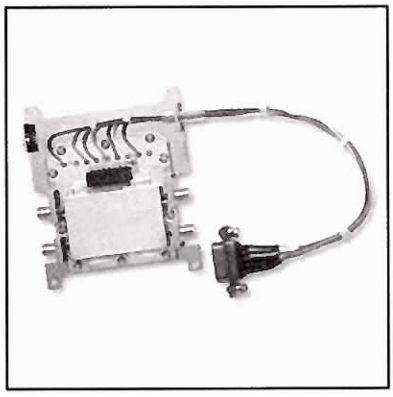

MODEL NUMBER CPS49093

Phase Shifter, 4 Section

FEATURES

- 1215-1400 MHz
- 22.5° LSB
- 337.5°
- +42 dBm 3rd Order Intercept
- TTL Driver
- SMA Connector

4 BIT

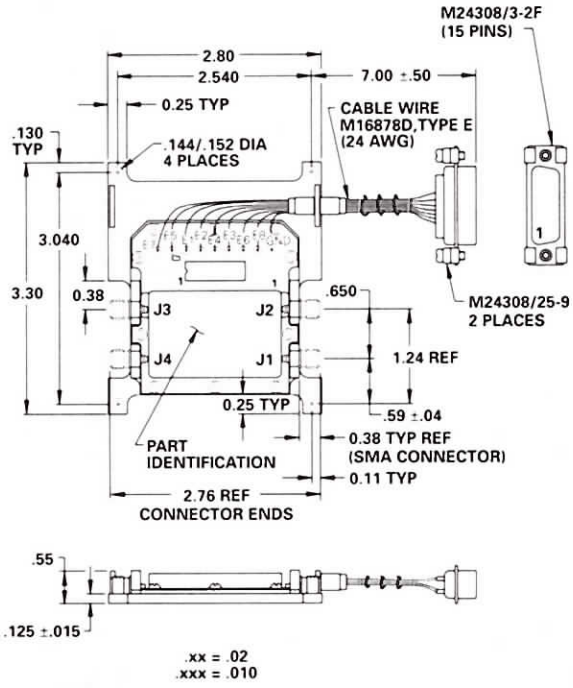

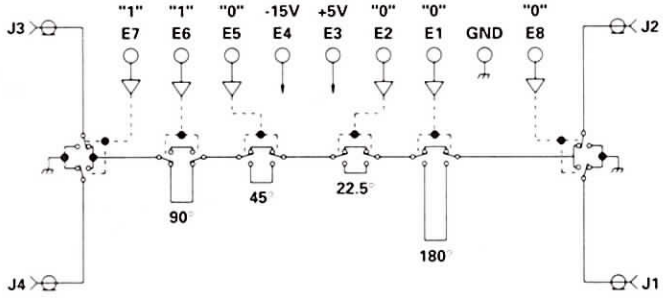

P1 PIN NO.	BD PIN NO.	FUNCTION
1	GND	GROUND
2	E3	+5V
3	E4	-15V
4	E1	180°
5	E6	90°
6	E5	45°
7	E2	22.5°
8	-	N/C
9	-	N/C
10	E8	J1/J2
11	E7	J3/J4
12	-	N/C
13	-	GND
14	-	GND
15	-	N/C

TYPICAL PERFORMANCE
at 25°C

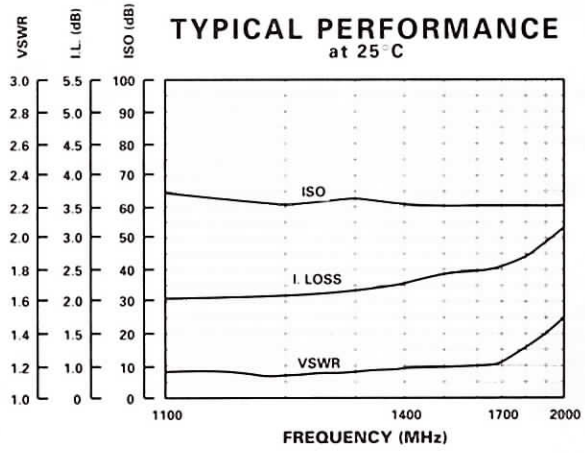

GUARANTEED PERFORMANCE

Parameter		Min	Typ	Max	Units	Conditions
Operating Frequency		1215		1400	MHz	
DC Current			34	250	mA	At +5 VDC Supply
			108	200	mA	At -15 VCD Supply
Control Type			TTL			6 Line Logic "0" = Refer Phase Logic "1" = Phase Shift
Control Current	*High*		.1	±20	µA	VIH = +5.0V
	Low		.1	±20	µA	VIL = +0.8 V
Insertion Loss		1.75	2.4	2.75	dB	At 25 C
		1.25		3.25	dB	At Temperature Extremes
Phase:	*LSB*		22.5		DEG	22.5, 45, 90, 180
	Range		337.5		DEG	At 1215 MHz
	Accuracy			±6	DEG	
	Linearity		1.5	3.0	DEG	
Isolation		40	60		dB	30 dBM Min With +5V Removed
VSWR			1.15/1	1.5/1		1215 - 1400 MHz
Impedance			50		OHMS	
Time Delay		.8	1.0	1.2	nSec	
Switching Speed			.6	3.5	µSec	50% TTL to 90% / 10% RF
Transition (Rise/Fall) Time			.05		µSec	10% / 90% or 90% / 10% RF
Switching (Video) Transients			36		mV	Peak Value
Intercept Points	*2nd*		+63		dBm	2000 / 785 MHz
	3rd		+42		dBm	1000 / 785 MHz
RF Power	*Operate*		+36	+34	dBm	0.2 dB Compression
	No Damage			+37	dBm	
Operating Temperature		-54	+25	+80	C	TA

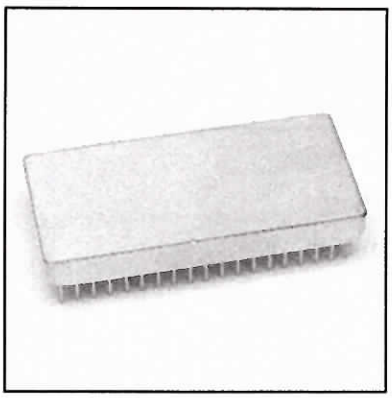

MODEL NUMBER DP0891

GaAs 5 Section Phase Shifter

FEATURES

- 1010-1110 MHz
- Constant Insertion Loss
- 48 nSec Switching Speed
- TTL Control
- 38 Pin DIP

5 BIT

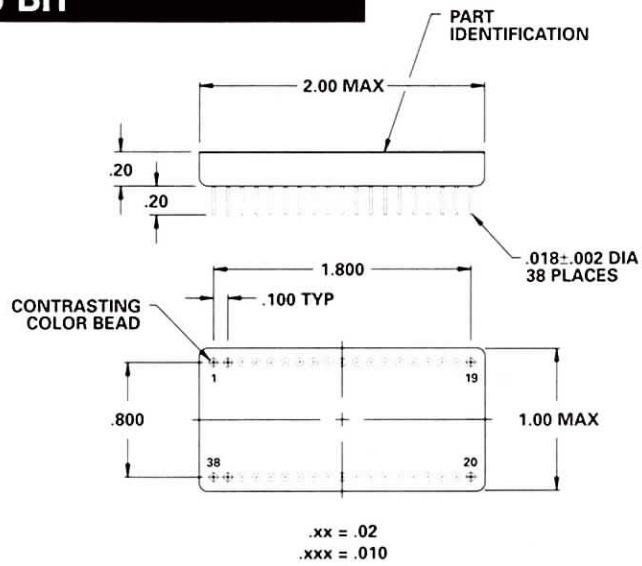

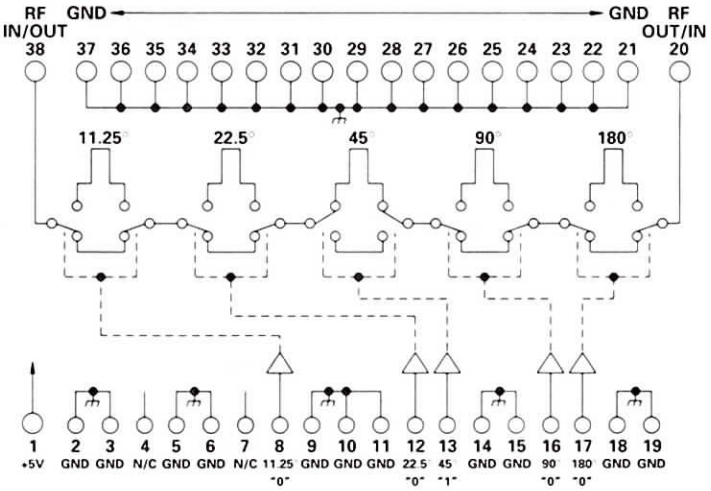

N/C = No Internal Connection

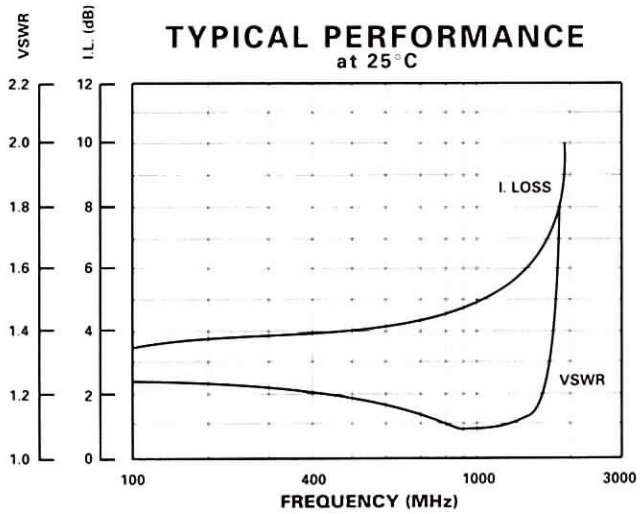

GUARANTEED PERFORMANCE

Parameter		Min	Typ	Max	Units	Conditions
Operating Frequency		1010		1110	MHz	
DC Current			1.2	10	mA	At +5 VDC Supply
Control Type			TTL			5 Line
						Logic "0" = Thru
						Logic "1" = Phase Shift
Control Current	*High*		1	±20	µA	VIH = +3.0 V
	Low		1	±20	µA	VIL = +0.5 V
Insertion Loss			5.3	7.5	dB	
	Stability		±0.2	±0.5	dB	For All Phase Shifters
Phase Shift	*LSB*		11.25		DEG	
	Range	0		348.75	DEG	11.25, 22.5, 45, 90, 180
	Accuracy			±5	DEG	Any 1 Bit
				±10	DEG	Any Combination
VSWR			1.15/1	1.3/1		
Impedance			50		OHMS	
Switching Speed			48	100	nSec	50% TTL to 90% / 10% RF
Transition (Rise/Fall) Time			25		nSec	90% / 10% or 10% / 90% RF
Switching (Video) Transients			180		mV	Peak Value
Intercept Points	*2nd*		+80		dBm	
	3rd		+50		dBm	
RF Power	*Operate*		+26	+24	dBm	0.1 dB Compression
	No Damage			+27	dBm	
Operating Temperature		-40	+25	+70	°C	TA

DAICO Industries

310.507.3242 • FAX 310.507.5701 • www.daico.com

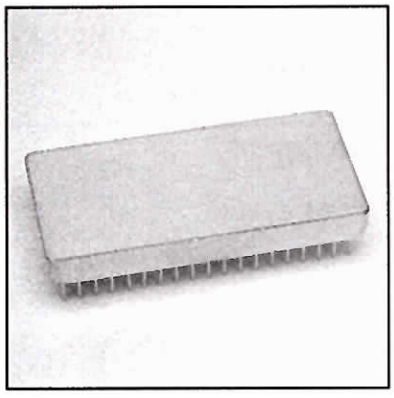

MODEL NUMBER DPS52005

Phase Shifter 5 Section

FEATURES

- 100-300 MHz
- Large Phase Shift, Small Package
- 38 Pin DIP

5 BIT

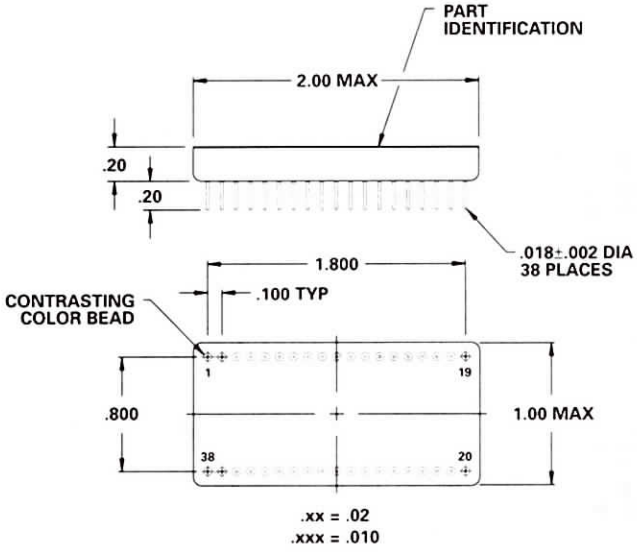

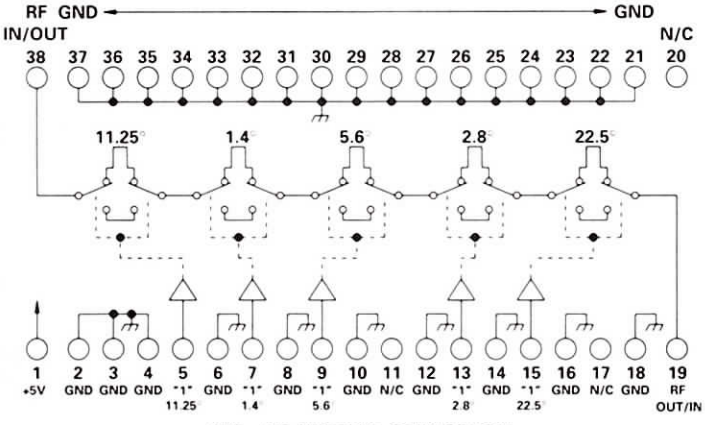

N/C = NO INTERNAL CONNECTION

TYPICAL PERFORMANCE

at 25°C

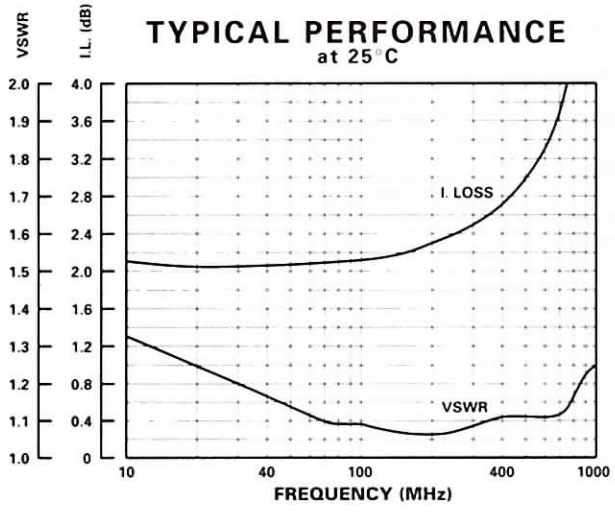

GUARANTEED PERFORMANCE

Parameter		Min	Typ	Max	Units	Conditions
Operating Frequency		100		300	MHz	Phase Tuned at Fc = 160 MHz
DC Current			57	100	mA	At +5 VDC Supply
Control Type			TTL			5 Line Logic "1" = Phase Shift
Control Current	*High*		-45		µA	VIH = +2.7 V
	Low		-90		µA	VIL = +0.5 V
Insertion Loss			2.5	3.0	dB	
Amplitude vs. Phase Variation			±0.05	±0.5	dB	At 160 MHz
Phase	*Steps*				DEG	1.4, 2.8, 5.6, 11.25, 22.5
	Range			43.6	DEG	
	Accuracy		±0.2	±0.7	DEG	At Fc = 160 MHz
VSWR			1.1/1	1.3/1		
Impedance			50		OHMS	
Switching Speed			530		nSec	50% TTL to 90% / 10% RF
Transition (Rise/Fall) Time			330		nSec	90% / 10% or 10% / 90% RF
Switching (Video) Transients			1.15		V	Peak Value
Intercept Points	*2nd*		+75		dBm	70 MHz / 50 MHz
	3rd		+35		dBm	35 MHz / 50 MHz
RF Power	*Operate*		+22	+10	dBm	1.0 dB Compression
	No Damage			+20	dBm	
Operating Temperature		-55	+25	+125	°C	TA

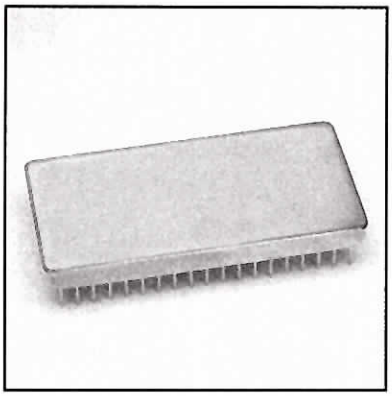

MODEL NUMBER DPS52181

Phase Shifter 5 Section

FEATURES

- 2300-2410 MHz
- High Frequency
- Low Transient
- 38 Pin DIP

5 BIT

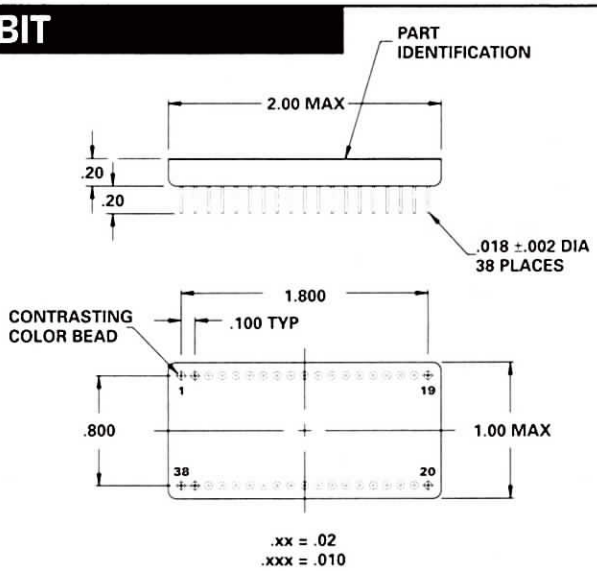

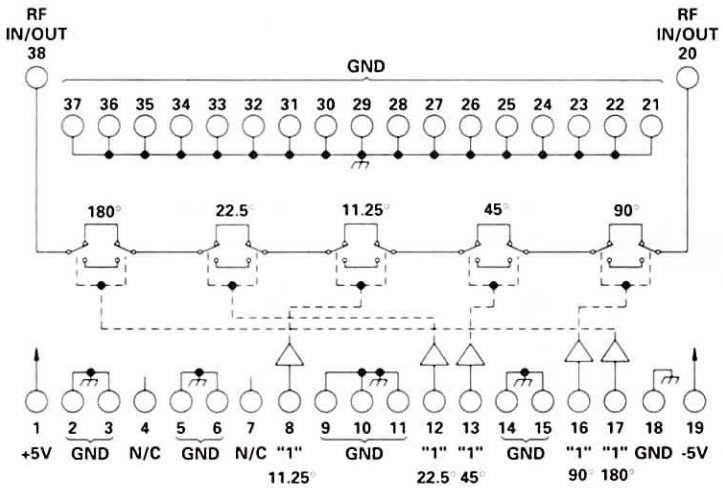

TYPICAL PERFORMANCE

at 25°C

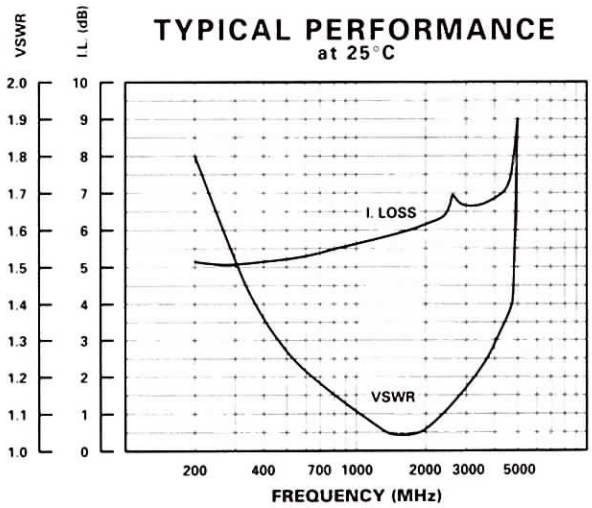

LOGIC TABLE						
CONT	STATE	PIN 8	PIN 12	PIN 13	PIN 16	PIN 17
H	Phase Shift	11.25°	22.5°	45°	90°	180°
L	Thru	"0"	"0"	"0"	"0"	"0"

GUARANTEED PERFORMANCE

Parameter		Min	Typ	Max	Units	Conditions
Operating Frequency		2300		2410	MHz	Fc = 2355
DC Current			2.20	5	mA	At +5 VDC Supply
			0.05	5	mA	At -5 VDC Supply
Control Type			TTL			5 Line
						See Logic Table
Control Current	*High*		±20		µA	At +5 VDC Supply
	Low		±20		µA	
Insertion Loss			6.5	8.0	dB	
Insertion Loss	*Stability-1*		±0.3	±0.5	dB	For All Phase Shifting
Insertion Loss	*Stability-2*		±0.3	±0.5	dB	Same Temp. Freq. & Phase State
						Unit To Unit for Same Lot/Date Code
Insertion Phase Stability			±5	±10	DEG	Same Temp. Freq. & Phase State
						Unit To Unit for Same Lot/Date Code
Phase	*LSB*		11.25		DEG	
	Range	0		348.75	DEG	11.25, 22.5, 45, 90, 180
	Slope					Linear Phase Vs. Frequency
	Accuracy			±5	DEG	Any One Bit
				±10	DEG	Any Combination
VSWR			1.2/1	1.5/1		
Impedance			50		OHMS	
Switching Speed			22	100	nSec	50% TTL to 90% RF or 10% RF
Transition (Rise/Fall) Time			6		nSec	90% / 10% or 10% / 90% RF
Switching (Video) Transients			160		mV	Peak Value
Intercept Points	*2nd*		+69		dBm	2202 MHz / 702 MHz
	3rd		+38		dBm	1101 MHz / 702 MHz
RF Power	*Operate*		+21	+18	dBm	0.1 dB Compression
	No Damage			+27	dBm	
Operating Temperature		-40	+25	+70	°C	TA

DAICO Industries

310.507.3242 • FAX 310.507.5701 • www.daico.com

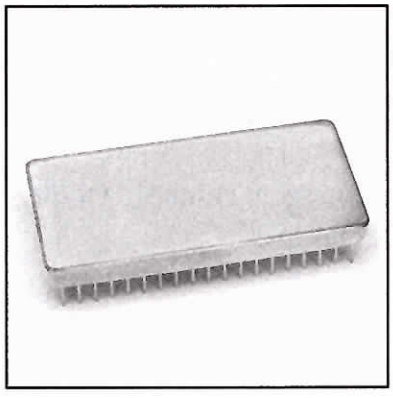

MODEL NUMBER DP0921

Phase Shifter 6 Section

FEATURES

- 400-450 MHz
- ±2.8 Deg. Phase Accuracy
- 2 mA, +5 VDC
- 40 nSec Switching Speed
- TTL Control
- 38 Pin DIP

6 BIT

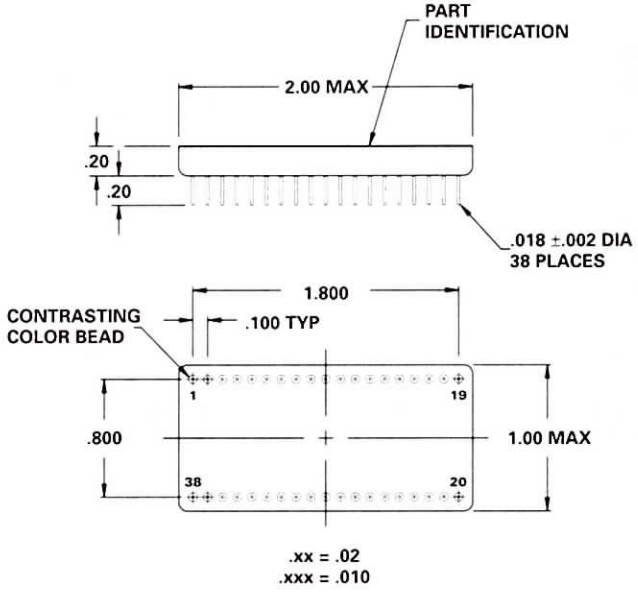

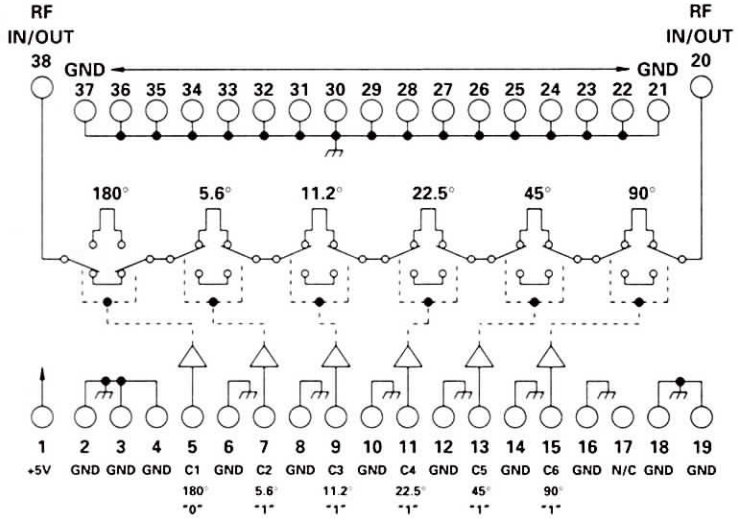

N/C = NO INTERNAL CONNECTION

TYPICAL PERFORMANCE

at 25°C

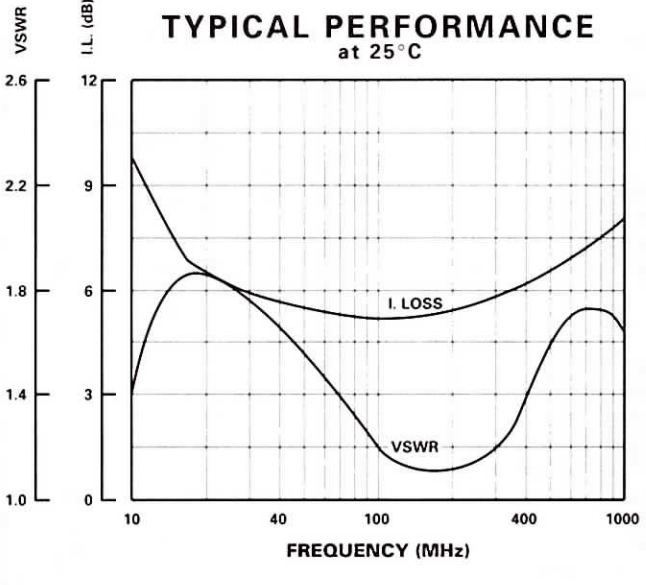

GUARANTEED PERFORMANCE

Parameter		Min	Typ	Max	Units	Conditions
Operating Frequency		400		450	MHz	
DC Current			2	30	mA	At +5 VDC Supply
Control Type			TTL			6 Line Logic "0" = Thru Logic "1" = Phase Shift
Control Current	*High*		0	±2	µA	VIH = +2.7 V
	Low		0	±2	µA	VIL = +0.5 V
Insertion Loss			6.2	6.7	dB	
Phase	*LSB*		5.6		DEG	
	Range	0		354.3	DEG	5.6, 11.2, 22.5, 45, 90, 180
	Accuracy			±2.8	DEG	
VSWR			1.36/1	1.5/1		
Impedance			50		OHMS	
Switching Speed			44	150	nSec	50% TTL to 90% / 10% RF
Transition (Rise/Fall) Time			11	40	nSec	90% / 10% or 10% / 90% RF
Switching (Video) Transients			140		mV	Peak Value
Intercept Points	*2nd*		+52.0		dBm	250 MHz / 150 MHz
	3rd		+27.5		dBm	125 MHz / 150 MHz
RF Power	*Operate*		+8.5	+6	dBm	0.1 dB Compression
	No Damage			+27	dBm	
Operating Temperature		-55	+25	+125	°C	TA

DAICO Industries

310.507.3242 • FAX 310.507.5701 • www.daico.com

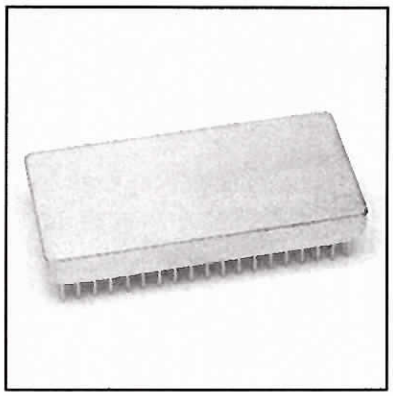

MODEL NUMBER CPS62036

Phase Shifter 6 Section

FEATURES

- 1200-1600 MHz
- Small DIP Package
- Amp/Phase Variation
- 30 nSec Switching Speed
- +41 dB Intercept Point 3rd Order
- 5.6 Degrees LSB

6 BIT

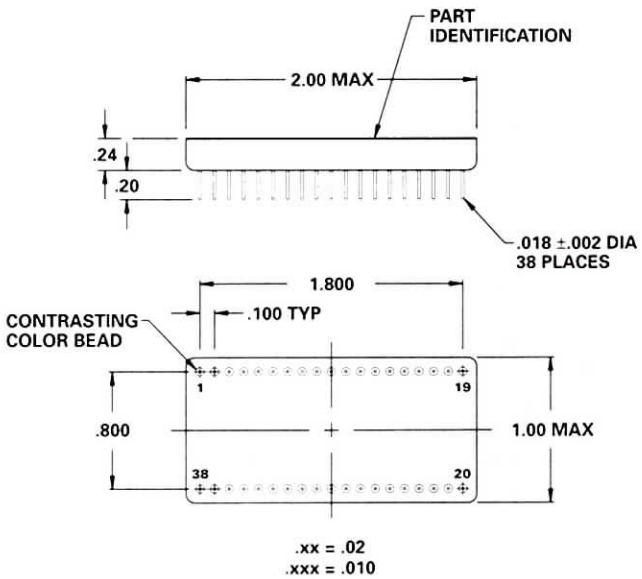

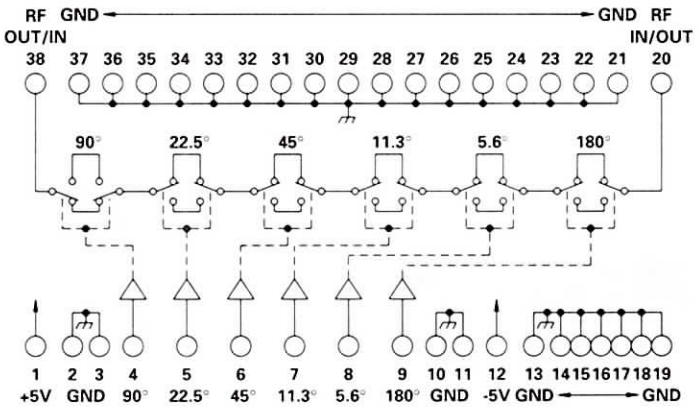

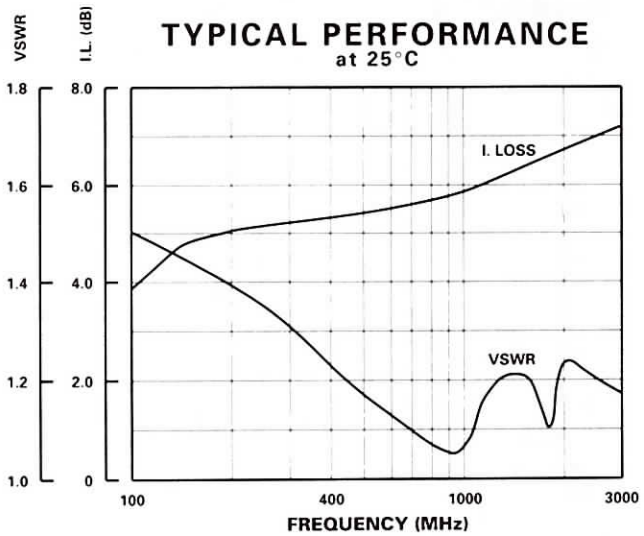

GUARANTEED PERFORMANCE

Parameter		Min	Typ	Max	Units	Conditions
Operating Frequency		1200		1600	MHz	Phase Tuned At Fr = 1575 42 MHz
DC Current				10	mA	At +5 VDC Supply
				10	mA	At -5 VDC Supply
Control Type			TTL			6 Line Logic "1" = Phase Shift
Control Current	*High*		-47		µA	VIH = +2.7 V
	Low		-89		µA	VIL = +0.5 V
Insertion Loss			7	7.5	dB	
Amplitude Vs. Phase Variation				±0.25	dB	
Phase Shift	*Steps*				DEG	90, 22.5, 45, 11.3, 5.6, 180
	LSB				DEG	5.6°
	Range				DEG	354, 375
	Accuracy			±3	DEG	
VSWR				1.6/1		
Impedance			50		OHMS	
Switching Speed				30	nSec	50% TTL to 90% / 10% RF
Transition (Rise/Fall) Time					nSec	10% / 90% or 90% / 10% RF
Switching (Video) Transients					mV	Peak Value
Intercept Points	*2nd*		+68		dBm	MHz
	3rd		+41		dBm	MHz
RF Power	*Operate*		+20		dBm	0.1 dB Compression
	No Damage		+30		dBm	
Operating Temperature		-55	+25	+85	°C	TA

DAICO Industries
310.507.3242 • FAX 310.507.5701 • www.daico.com

MODEL NUMBER 100D0896

Phase Shifter 6 Section

FEATURES

- 30-300 MHz
- 5.625° LSB, 354.375° Range
- TTL Driver
- SMA, BNC, or TNC Connectors

6 BIT

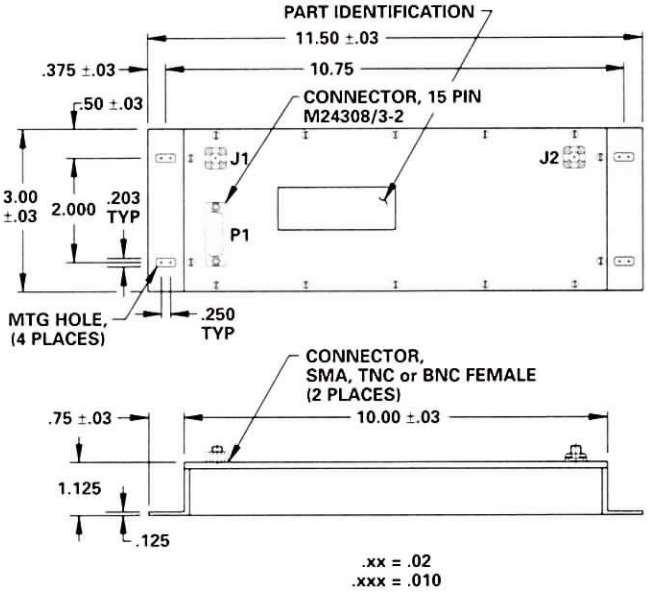

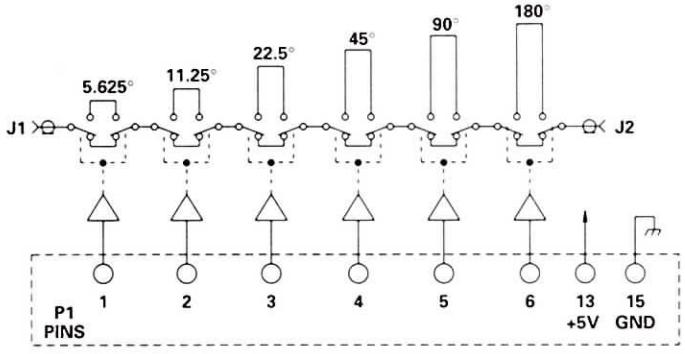

GUARANTEED PERFORMANCE

Parameter		Min	Typ	Max	Units	Conditions
Operating Frequency		30		300	MHz	Specify Center Frequency Fo
DC Current			115	170	mA	At +5 VDC Supply
Control Type			TTL			6 Line Logic "0" = Phase Shift Logic "1" = Reference Phase
Control Current	*High*			1	µA	VIH = +2.7 V
	Low			-1	µA	VIL = +0.5 V
Insertion Loss			2.6	4.0	dB	
			±0.1	±0.25	dB	Vs. Phase Shift
Phase Shift	*LSB*		5.625		DEG	
	Range	0		354.375	DEG	5.625, 11.25, 22.5, 45, 90, 180
	Accuracy			±2.0	DEG	
VSWR			1.3/1	1.5/1		
Impedance			50		OHMS	
Switching Speed				4	µSec	50% TTL to 90% / 10% RF
RF Power	*Operate*			+10	dBm	0.1 dB Compression
	No Damage			+20	dBm	
Operating Temperature		-40	+25	+71	°C	TA

Bandwidth: ±10%, Phase Specified at Fo Only

TYPICAL PERFORMANCE
at 25°C

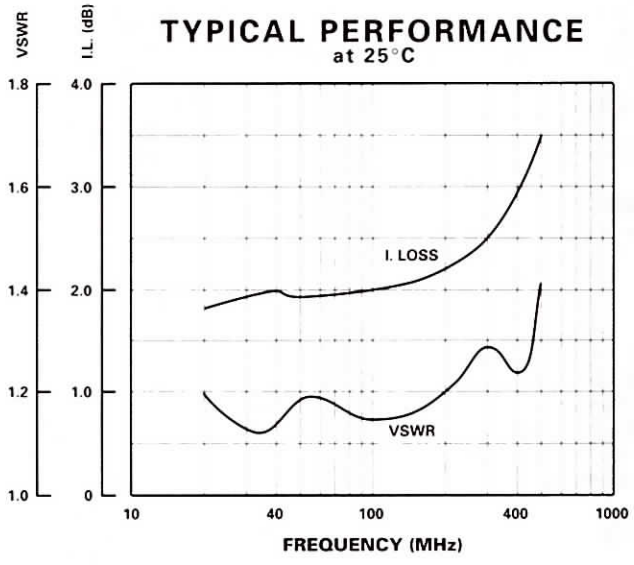

PART NUMBER EXAMPLE

100D0896 - 60 MHz - SMA

- SMA — Specify Connector Type SMA, TNC, BNC
- 60 MHz — Specify Center Frequency
- 100D0896 — Basic Part Number

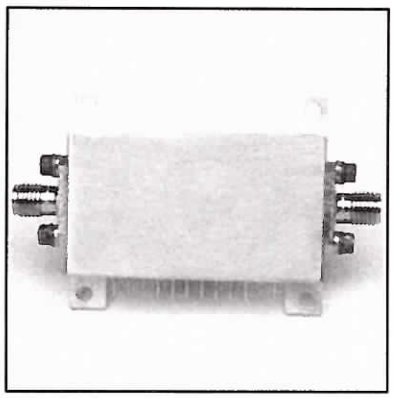

MODEL NUMBER DPS86315

Phase Shifter 8 Section

FEATURES

- 1665-1685 MHz
- SMA Female Connectors
- 1.4 Degrees LSB
- 358.6 Degrees Range
- 180 nSec Switching Speed

8 BIT

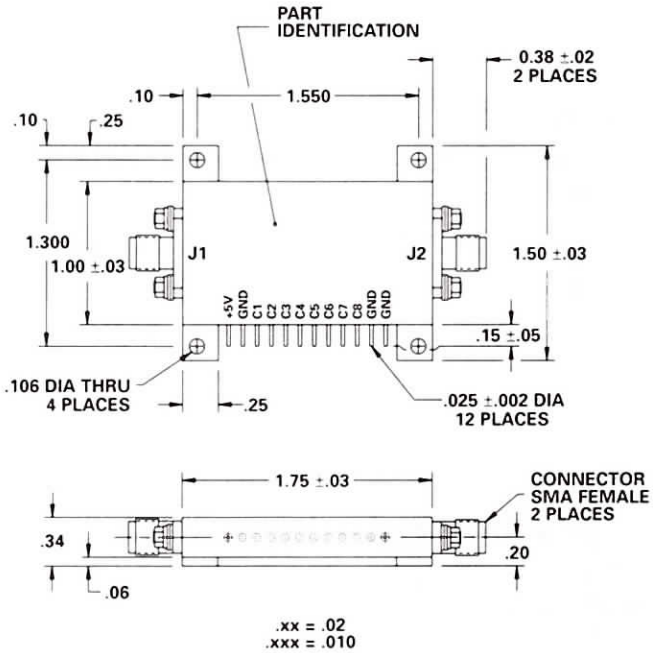

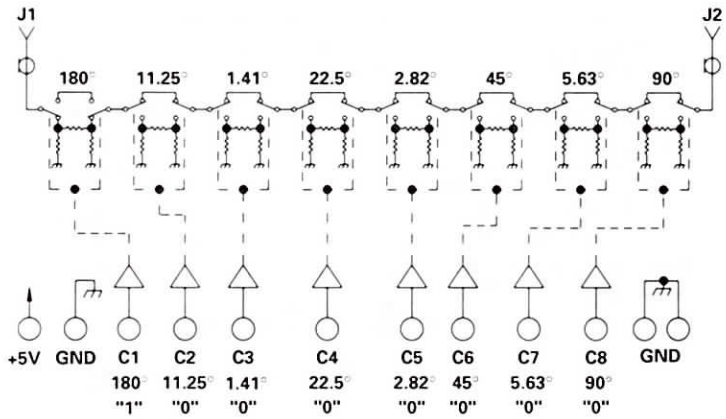

TYPICAL PERFORMANCE

at 25°C

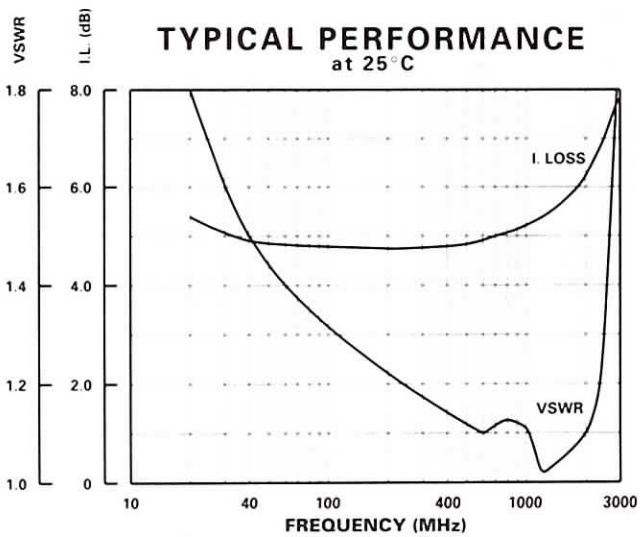

GUARANTEED PERFORMANCE

Parameter		Min	Typ	Max	Units	Conditions
Operating Frequency		1665	1675	1685	MHz	
DC Current			8.3	18	mA	At +5 VDC Supply
Control Type			TTL			8 Line
						Logic "1" = Phase
Control Current	*High*			±10	µA	VIH = +2.7 V
	Low			±10	µA	VIL = +0.5 V
Insertion Loss			5.9	8	dB	
Phase	*LSB*	1.4			DEG	
	Range			358.61	DEG	1.41, 2.82, 5.63, 11.25
						22.5, 45, 90, 180
	Accuracy			±5	DEG	Any One Bit
				±10	DEG	Any Combination of Bits
VSWR			1.2/1	1.6/1		
Impedance			50		OHMS	
Switching Speed			180		nSec	50% TTL to 90% / 10% RF
Transition (Rise/Fall) Time			30		nSec	10% / 90% or 90% / 10% RF
Switching (Video) Transients			300		mV	Peak Value
Intercept Points	*2nd*	+60	+45		dBm	1700 MHz / 900 MHz
	3rd	+25	+35		dBm	850 MHz / 900 MHz
RF Power	*Operate*		+15	+10	dBm	0.1 dB Compression
	No Damage			+20	dBm	
Operating Temperature		0	+25	+71	°C	TA

MODEL NUMBER 100D0898

Phase Shifter 8 Section

FEATURES

- 30-300 MHz
- 1.4° LSB, 358.6° Range
- TTL Driver
- SMA, BNC, or TNC Connectors

8 BIT

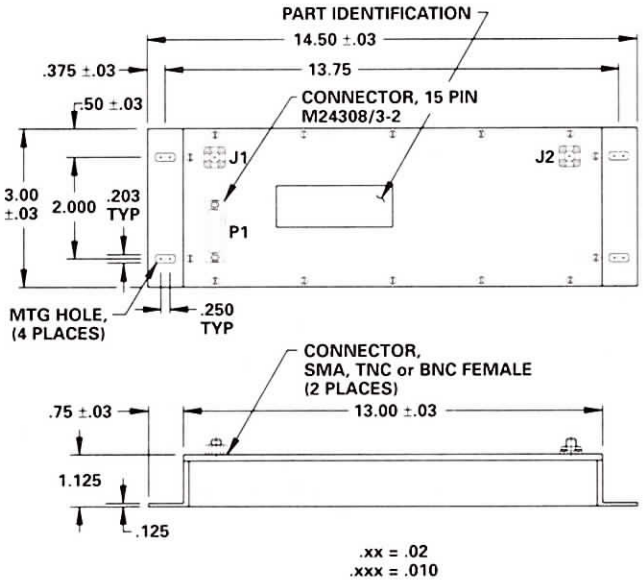

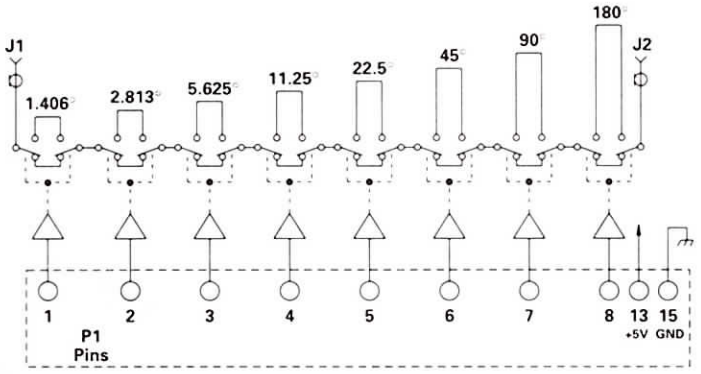

GUARANTEED PERFORMANCE

Parameter		Min	Typ	Max	Units	Conditions
Operating Frequency		30		300	MHz	Specify Center Frequency Fo
DC Current			375	500	mA	At +5 VDC Supply
Control Type			TTL			8 Line Logic "0" = Phase Shift Logic "1" = Reference Phase
Control Current	*High*			1	µA	VIH = +2.7 V
	Low			-1	µA	VIL = +0.5 V
Insertion Loss			3	5	dB	
			±0.2	±0.35	dB	Vs. Phase Shift
Phase Shift	*LSB*		1.406		DEG	
	Range	0		358.6	DEG	1.406, 2.813, 5.625, 11.25, 22.5, 45, 90, 180
	Accuracy			±2.0	DEG	
VSWR			1.3/1	1.5/1		
Impedance			50		OHMS	
Switching Speed				4	µSec	50% TTL to 90% / 10% RF
RF Power	*Operate*			+10	dBm	0.1 dB Compression
	No Damage			+20	dBm	
Operating Temperature		-40	+25	+71	C	TA

Bandwidth: ±10%, Phase Specified at Fo Only

TYPICAL PERFORMANCE
at 25°C

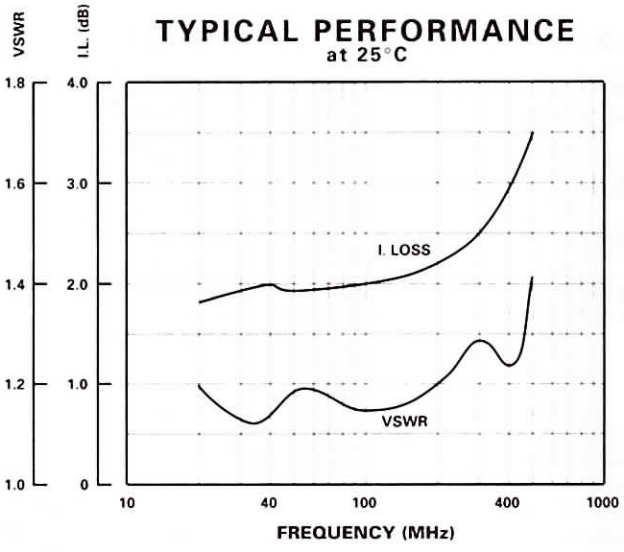

PART NUMBER EXAMPLE

100D0898 - 60 MHz - SMA

- SMA — Specify Connector Type SMA, TNC, BNC
- 60 MHz — Specify Center Frequency
- 100D0898 — Basic Part Number

MODEL NUMBER DPS89032	Phase Shifter 8 Section

FEATURES

- 100-300 MHz
- 90 mA, +5 VDC
- Field Replaceable SMA Connectors

8 BIT

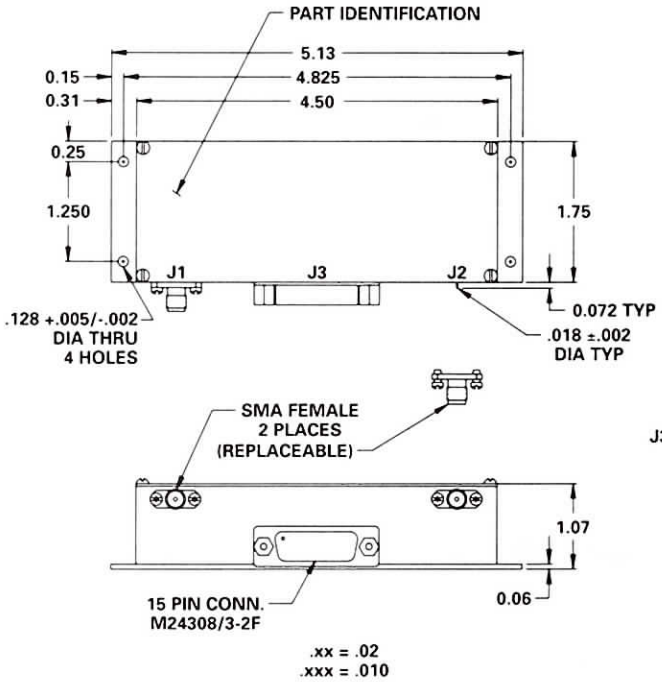

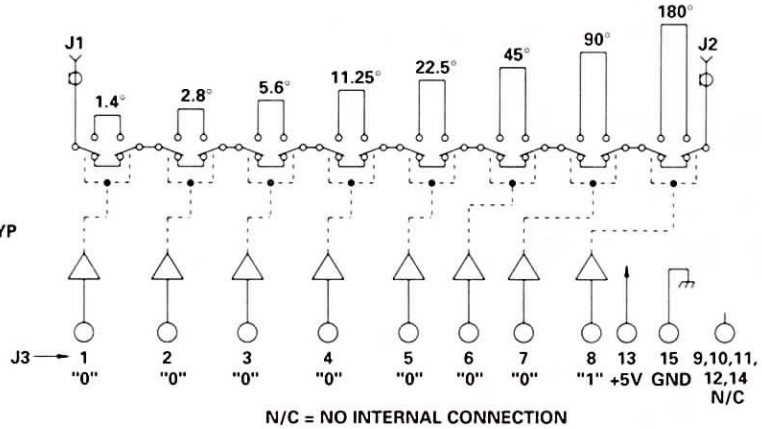

TYPICAL PERFORMANCE
at 25°C

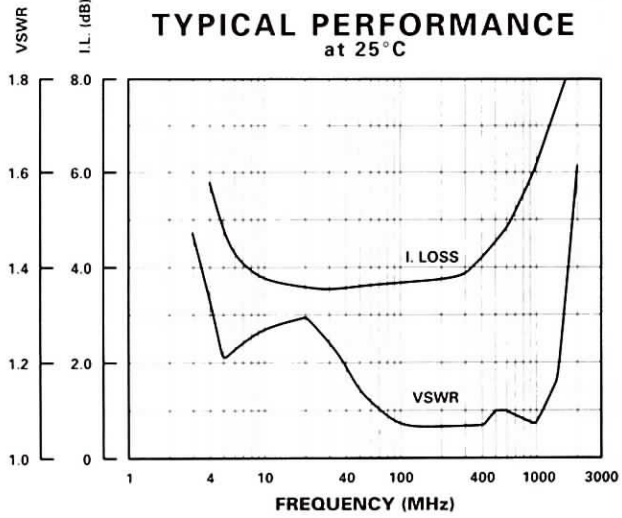

GUARANTEED PERFORMANCE

Parameter		Min	Typ	Max	Units	Conditions
Operating Frequency		100		300	MHz	Phase Tuned at Fc = 160 MHz
DC Current			90	200	mA	At +5 VDC Supply
Control Type			TTL			8 Line Logic "1" = Phase Shift
Control Current	*High*		43		µA	VIH = +2.7 V
	Low		89		µA	VIL = +0.5 V
Insertion Loss			3.75	4.0	dB	
Amplitude Vs. Phase Variation			0.03	±0.5	dB	At 160 MHz
Phase	*Steps*				DEG	1.4, 2.8, 5.6, 11.25, 22.5 45, 90, 180
	Range	0		358.6	DEG	
	Accuracy			±0.7	DEG	At Fc = 160 MHz
VSWR			1.15/1	1.3/1		
Impedance			50		OHMS	
Switching Speed			0.8		µSec	50% TTL to 90% / 10% RF
Transition (Rise/Fall) Time			310		nSec	90% / 10% or 10% / 90% RF
Switching (Video) Transients			970		mV	Peak Value
Intercept Points	*2nd*		+82		dBm	475 MHz / 175 MHz
	3rd		+36		dBm	237.5 MHz / 175 MHz
RF Power	*Operate*		+16	+10	dBm	1.0 dB Compression
	No Damage				dBm	
Operating Temperature		-55	+25	+85	°C	TA

MODEL NUMBER DPS89082	Phase Shifter 8 Section

FEATURES

- 500-1000 MHz
- 100 mA, +15 VDC
- Field Replaceable SMA Connectors
- Also Available in Dual 38 Pin DIPs as DPS42028 and DPS42029

8 BIT

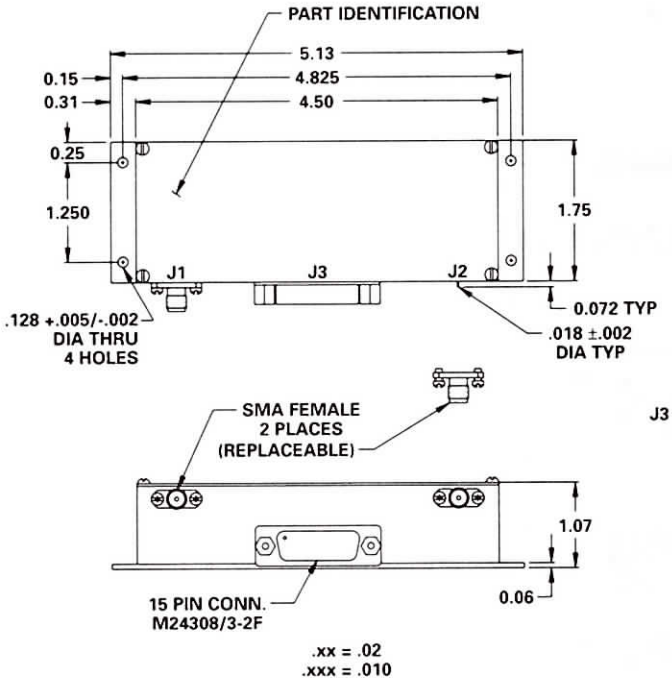

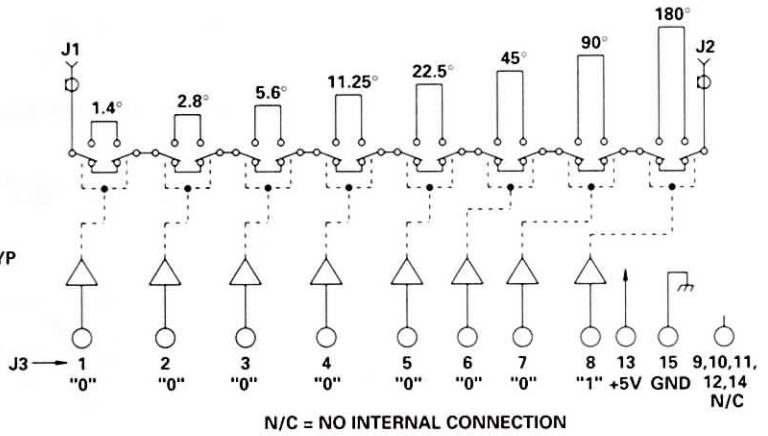

TYPICAL PERFORMANCE
at 25°C

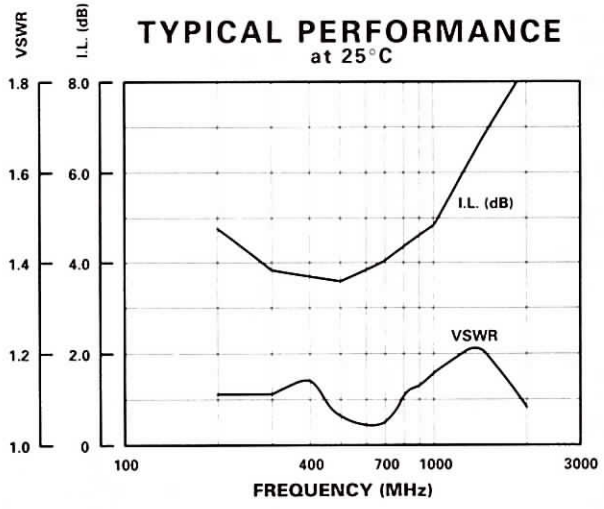

GUARANTEED PERFORMANCE

Parameter		Min	Typ	Max	Units	Conditions
Operating Frequency		500		1000	MHz	Phase Tuned at Fc = 700 ±5 MHz
DC Current			100	200	mA	At +15 VDC Supply
Control Type			TTL			8 Line Logic "1" = Phase Shift
Control Current	*High*			±10	µA	VIH = +2.7 V
	Low			±10	µA	VIL = +0.5 V
Insertion Loss			4.9	6.0	dB	
Amplitude Vs. Phase Variation			0.1	±0.5	dB	
Phase	*Steps*				DEG	1.4, 2.8, 5.6, 11.25, 22.5 45, 90, 180
	Range	0		358.6	DEG	
	Accuracy				DEG	At ±(.2 DEG +2% of Phase Value) = 700 MHz
VSWR			1.16/1	1.35/1		
Impedance			50		OHMS	
Switching Speed			160	500	nSec	50% TTL to 90% / 10% RF
Transition (Rise/Fall) Time			50		nSec	90% / 10% or 10% / 90% RF
Switching (Video) Transients			230		mV	Peak Value
Intercept Points	*2nd*		+71		dBm	
	3rd		+30		dBm	
RF Power	*Operate*		+14	+10	dBm	1.0 dB Compression
	No Damage			+23	dBm	
Operating Temperature		-55	+25	+85	°C	TA

Bit/Threshold Detectors

- High Sensitivity
- TTL or Voltage Output
- Temperature Compensated
- Full Military Screening Available (See Page 281)

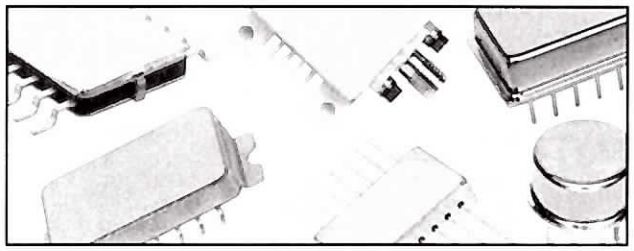

For additional products and information, please visit us at www.daico.com

Threshold Detector Specification Table

Spec Freq MHz	Dynamic Range dBm	Part Number	Responce Time µSec	Temp Stability dB	DC Voltage Volts	Package	Page
2-1000	-25 to -10	DTD01999	6.7	±0.8	+5, ±15	TO-8	271
5-50	-15 to -10	DHD05071	8	±1.5	+5	14 Pin SMP	276
10-1500	-25 to -10	DTD08035	300	±1.5	+5	14 Pin Flatpack	274
10-2000	-30 to -10	DTD01904	150	±0.5	+5	TO-8	269
10-2000	-30 to -10	DTD08052	125	±1.1	+5	6 Pin Flatpack	275
10-2000	-25 to -10	DTD05026	3600	±0.8	+5	12 Pin SMP	278
20-500	-20 to 0	DHD01988	3	±0.6	+5, ±15	14 Pin DIP	270
20-2000	-25 to +10	DAD05079	2	±1.0	±15	4 Pin SMP	279
100-6000	-10 to +10	CTD05076	1.5	±1.0	+15	SM Package	280
200-2100	-12 to +3	DTD05097	5	±1.5	+5	6 Pin SMP	277
400-450	-10 to +10	DTD05080	3	±0.5	+15	SM Package	281
500-2000	-20 to +10	DAD02006	20	±0.3	+5	TO-8	273
500-4000	-30 to -10	DTD01960	3	±1.4	+5, ±15	TO-8	272
500-4000	-25 to 0	DTD05045	180	±0.8	+5	6 Pin SMP	282

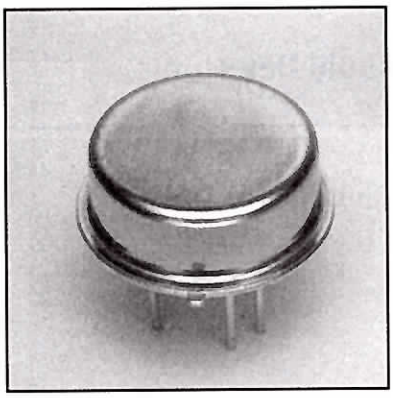

MODEL NUMBER DTD01904

Bit Detector

FEATURES

- 10-2000 MHz
- -30 to -10 dBm Dynamic Range
- Adjustable Threshold Level
- 1 mA Sink/Source Current
- See DTD05226 for Surface Mount Version

TD

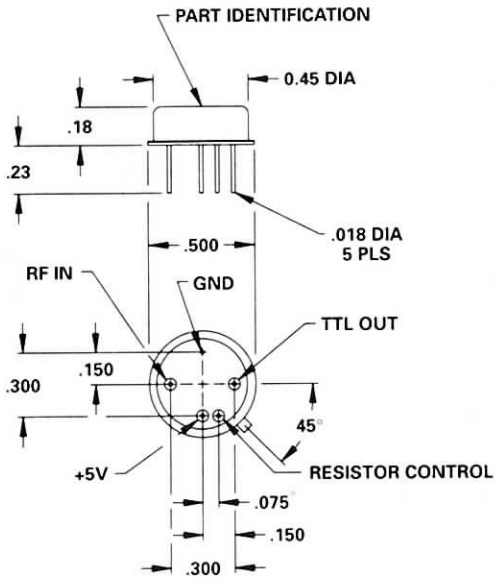

.xx = .02
.xxx = .010

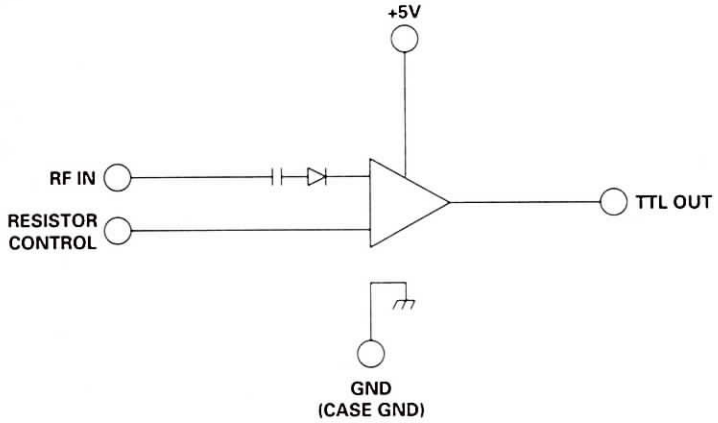

TYPICAL PERFORMANCE
at 25°C

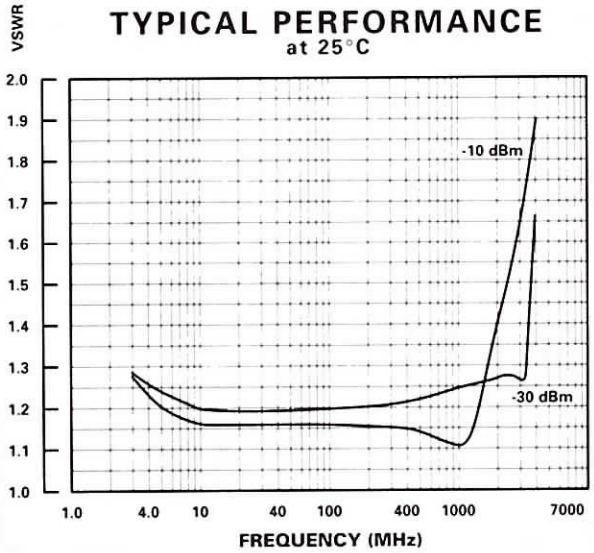

GUARANTEED PERFORMANCE

Parameter		Min	Typ	Max	Units	Conditions
Operating Frequency		10		2000	MHz	
Dynamic Range		-30		-10	dBm	
Resistor Control			35		OHMS	P_{in} = -30 dBm
			6500		OHMS	P_{in} = -10 dBm
Hysteresis			0.8	1.2	dB	
Temperature Stability			±1.4	±1.5	dB	
Input Flatness			±0.45	±1.0	dB	
Response Time (See Note 1)			275	350	µSec	@ -10 dBm
			8.5	30	mSec	@ -30 dBm
Input VSWR			1.3/1	2/1		-30 dBm < P_{in} < -20 dBm
			1.45/1	2.2/1		-20 dBm < P_{in} < -10 dBm
Output Current	*Source*	-1	-5.3		mA	VOH = +2.7 V
	Sink	1	1.13		mA	VOL = +0.5 V
DC Current			4.0	5.0	mA	At +5 VDC
RF Power	*No Damage*			+13	dBm	
Operating Temperature		-55	+25	+85	°C	TA

Note 1: Response Time for Input Change > 3 dB Above CW Threshold

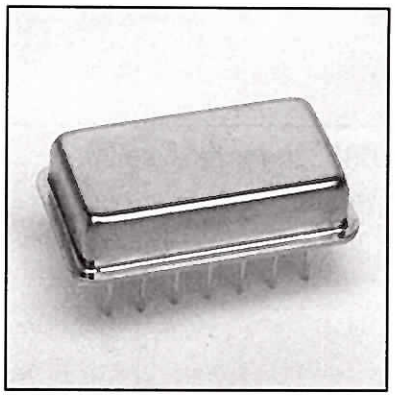

MODEL NUMBER DHD01988

Coupler/Threshold Detector

FEATURES

- Integrated Coupler and Threshold Detector
- -20 to 0 dBm Dynamic Range
- Adjustable Threshold Level
- 0.2 dB Hysteresis
- 1 mA Sink/Source Current
- 14 Pin DIP

TD

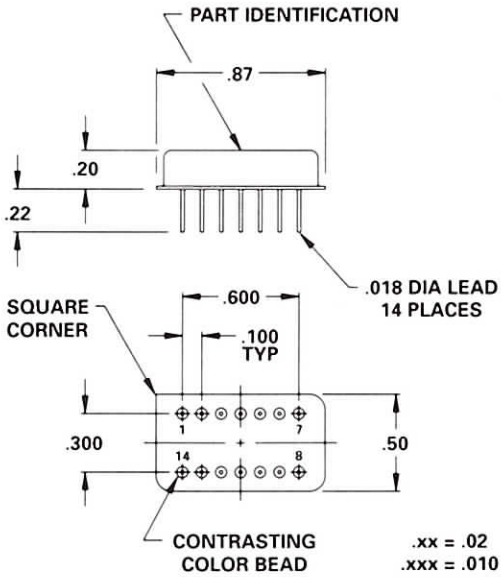

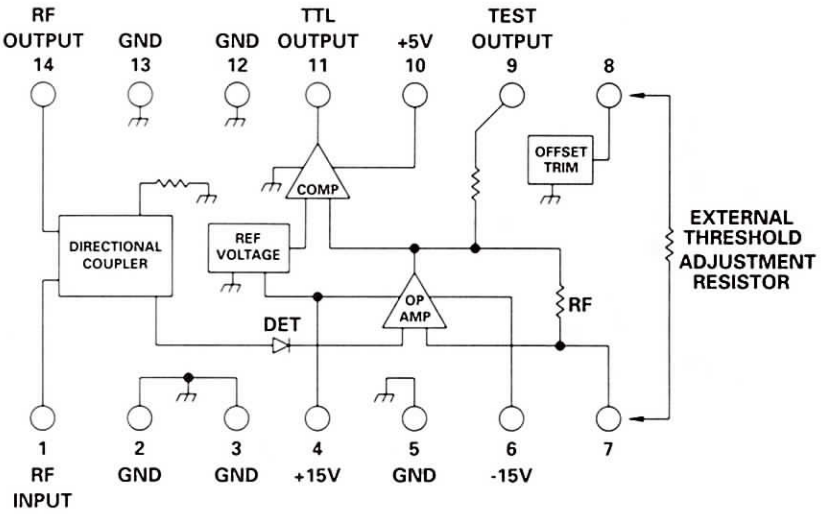

GUARANTEED PERFORMANCE

Parameter		Min	Typ	Max	Units	Conditions
Operating Frequency		20	160	500	MHz	
Dynamic Range		-20		0	dBm	Via an External Resistor Control
Hysteresis			0.2	1.2	dB	
Temperature Stability			±0.6	±1.5	dB	
Insertion Loss			1.2	1.5	dB	20 - 180 MHz
			1.4	1.8	dB	180 - 500 MHz
Input Flatness			±0.4	±1	dB	
Response Time			3		µSec	3 dB Above CW Threshold At RF In to 90% / 10% or 10% / 90% At TTL Out
Input VSWR			1.1/1	1.3/1		
Output Current	*Source*	1	29		mA	VOH = +2.7 V
	Sink	1	9		mA	VOL = +0.5 V
DC Current			2	20	mA	At +5 VDC
			6	15	mA	At +15 VDC
			6	15	mA	At -15 VDC
Operating Temperature		0	+25	+50	°C	TA

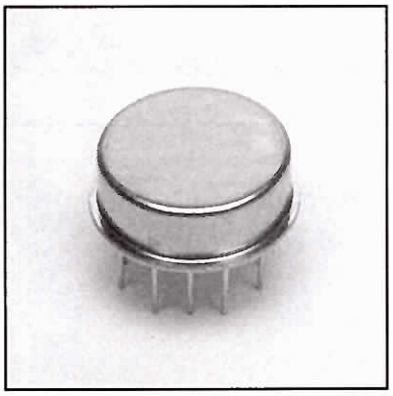

MODEL NUMBER DTD01999

Threshold Detector

FEATURES

- 2-1000 MHz
- -25 to -10 dBm Dynamic Range
- Adjustable Threshold Level
- 0.8 dB Hysteresis
- 1 mA Sink/Source Current
- Stable Over Temperature
- 12 Pin TO-8 Package

TD

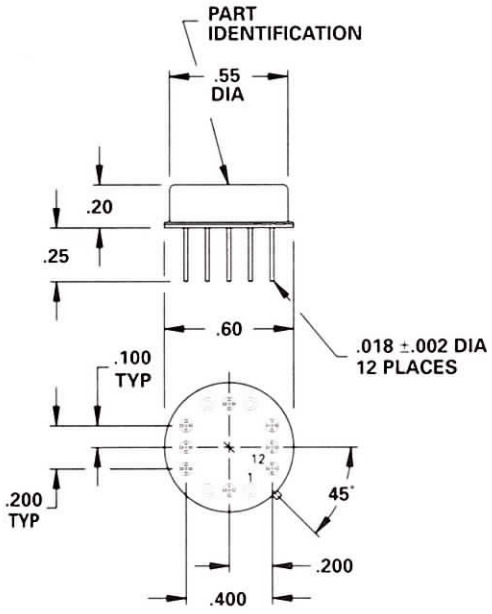

.xx = .02
.xxx = .010

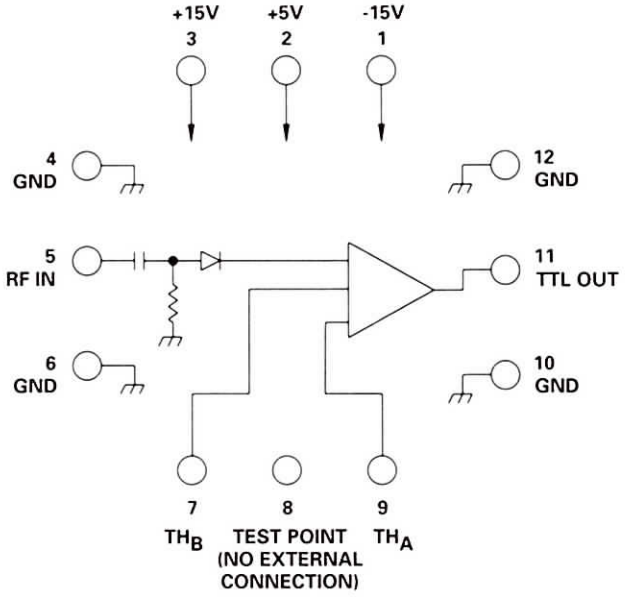

GUARANTEED PERFORMANCE

Parameter		Min	Typ	Max	Units	Conditions
Operating Frequency		2		1000	MHz	
Dynamic Range		-25		-10	dBm	VIA an External Resistor Control
Hysteresis			0.8	1.2	dB	
Temperature Stability			±0.8	±1.5	dB	
Input Flatness			±0.3	±1.0	dB	
Switching Speed			6.7	26	µSec	Response Time for Input Change > 3 dB Above CW Threshold
Input VSWR			1.4/1	2/1		
Input Impedance			50			
Output Current:	*Source*	1	4.6		mA	VOH = +2.7V
	Sink	1	26		mA	VOL = +0.5V
DC Current			10.2	15	mA	At +5 VDC
			8.8	15	mA	At +15 VDC
			6.8	10	mA	At -15 VDC
Operating Temperature		-55	+25	+85	°C	TA

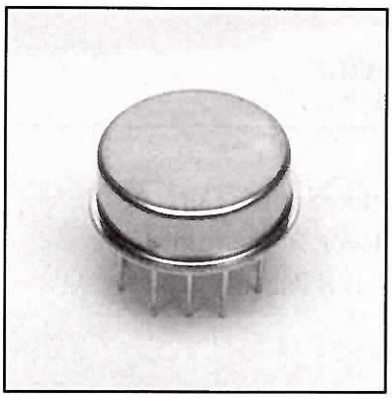

MODEL NUMBER DTD01960

Threshold Detector

FEATURES

- 500-4000 MHz
- -30 to -10 dBm Dynamic Range
- Adjustable Threshold Level
- 0.6 dB Hysteresis
- 1 mA Sink/Source Current
- Stable Over Temperature

TD

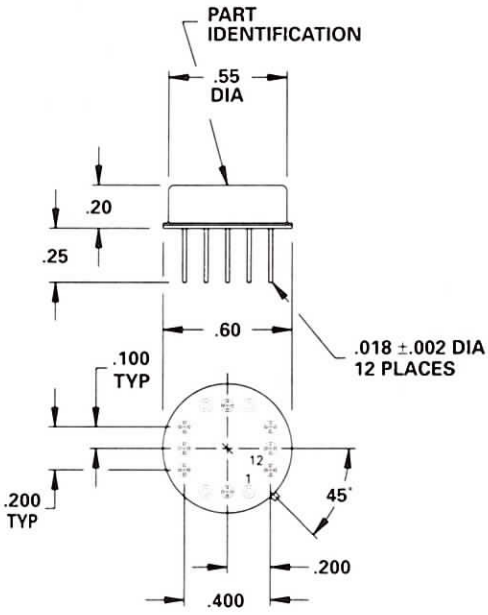

.xx = .02
.xxx = .010

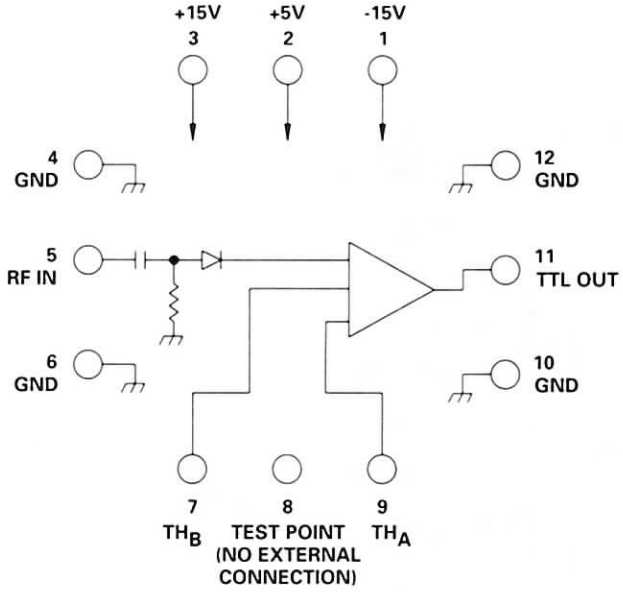

GUARANTEED PERFORMANCE

Parameter		Min	Typ	Max	Units	Conditions
Operating Frequency		500		4000	MHz	
Dynamic Range		-30		-10	dBm	VIA an External Resistor Control
Hysteresis			0.5	1.2	dB	
Temperature Stability			±1.4	±1.5	dB	
Input Flatness			±0.20	±1.0	dB	
Response Time			3	10	µSec	3 dB Above CW Threshold At RF In to 90% / 10% or 10% / 90% at TTL Out
Input VSWR			1.23/1	2/1		
Output Current:	*Source*	1	4.8		mA	VOH = +2.7V
	Sink	1	-5.36		mA	VOL = +0.5V
DC Current			10	15	mA	At +5 VDC
			8.9	15	mA	At +15 VDC
			6.7	15	mA	At -15 VDC
Operating Temperature		0	+25	+50	°C	TA

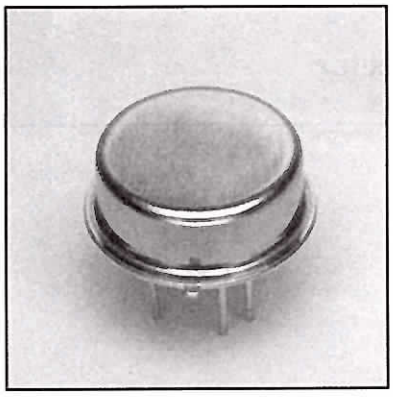

MODEL NUMBER DAD02006

Analog Level Detector

FEATURES

- 500-2000 MHz
- ±0.4 dB Temperature Stability
- 185 mV Output Voltage @ P_{in}=-10 dBm
- ±1 dB Input Flatness
- Broad Temperature Range
- 5 Pin TO-8 Package
- -20 to +10 dBm Dynamic Range

TD

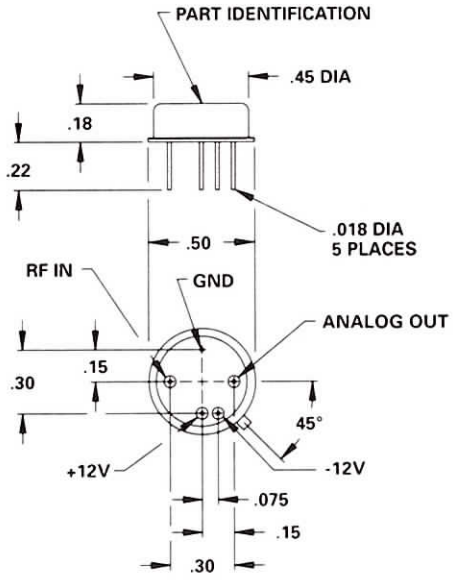

.xx = .02
.xxx = .010

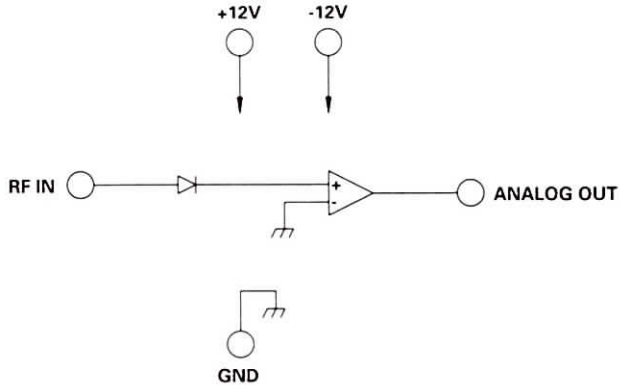

GUARANTEED PERFORMANCE

Parameter	Min	Typ	Max	Units	Conditions
Operating Frequency	500		2000	MHz	
Dynamic Range	-20		+10	dBm	
Temperature Stability		±0.4	±1.0	dB	+10 to -10 dBm
Input Flatness		±0.4	±1.0	dB	+10 to -10 dBm
Analog Output		835		mV	P_{in} = 0 dBm
		410		mV	P_{in} = -5 dBm
		185		mV	P_{in} = -10 dBm
Rise Time		12	20	µSec	10% / 90%
Input VSWR		1.4/1	1.7/1		
Output Offset Drift		50		mV	No Input Power Over Temp.
DC Current		1.4	2	mA	At +12 VDC
		1.5	2	mA	At -12 VDC
Operating Temperature	-55	+25	+110	°C	TA

TYPICAL PERFORMANCE
at 25°C

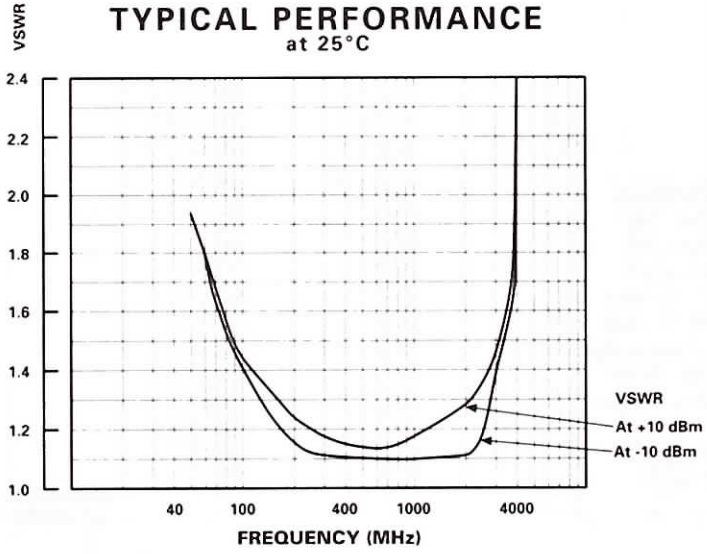

DAICO Industries
310.507.3242 • FAX 310.507.5701 • www.daico.com

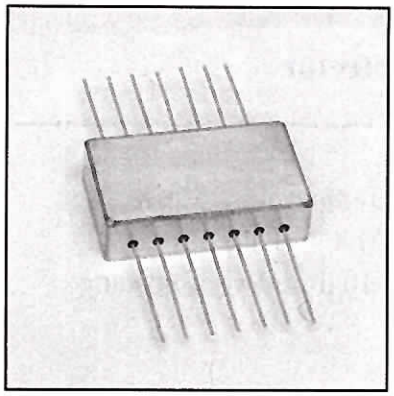

MODEL NUMBER DTD08035

Threshold Detector

FEATURES

- 10-1500 MHz
- Detects from -25 dBm
- 0.8 dB Hysteresis
- Temperature Compensated
- 14 Pin Flatpack

TD

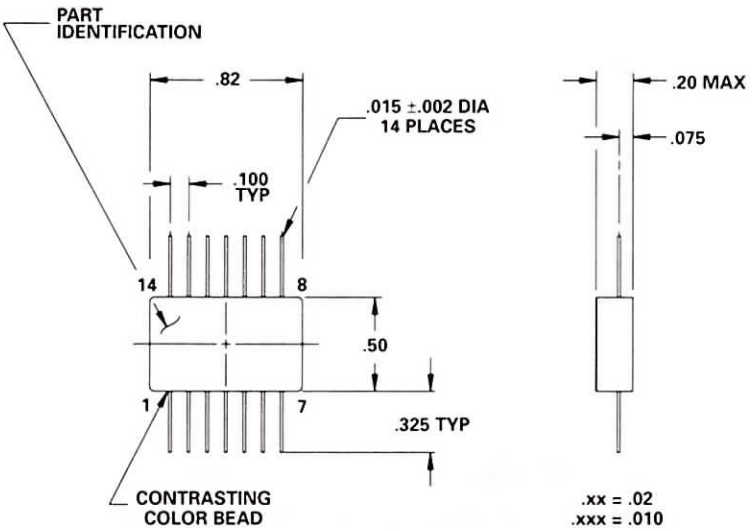

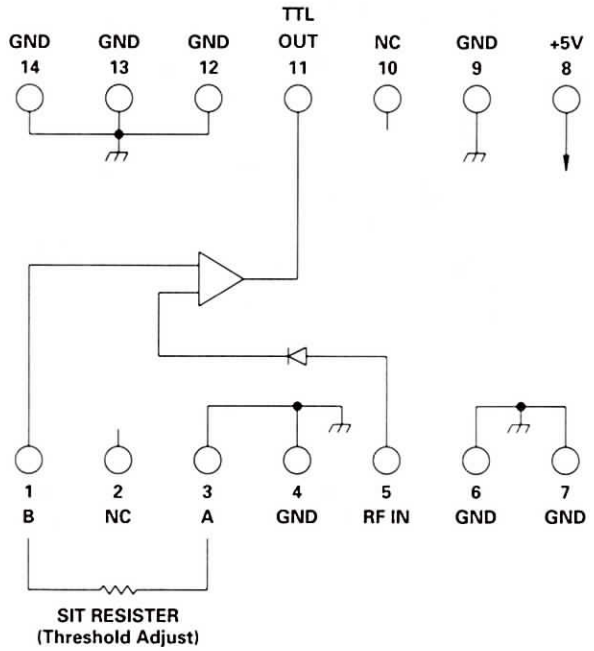

GUARANTEED PERFORMANCE

Parameter		Min	Typ	Max	Units	Conditions
Operating Frequency		10		1500	MHz	
Dynamic Range		-25		-10	dBm	
Hysteresis			0.8	1.2	dB	
Temperature Stability			±0.5	±1.5	dB	
Input Flatness			±0.5	±1.5	dB	
Response Time *(Note 1)*			150	300	µSec	90% / 10% or 10% / 90% RF
Input VSWR	*Thru*		1.5/1	2.0/1		
Output Current	*Source*	1	10.7		mA	VOH = +2.7 V
	Sink	1	2.02		mA	VOL = +0.5 V
DC Current			4.5	5	mA	At +5 VDC
Operating Temperature		-55	+25	+90	°C	TA

Note: Response Time For Input Change > 3 dB Above CW Threshold Output Loading 1 m Ω and 80 pf

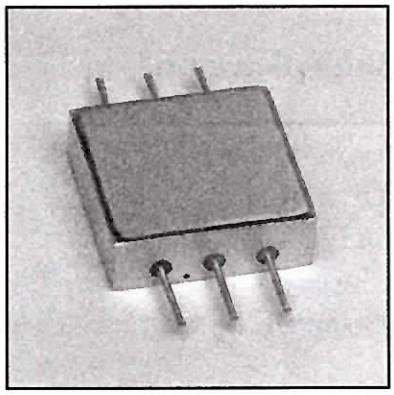

MODEL NUMBER DTD08052

Threshold Detector

FEATURES

- 10-2000 MHz
- -30 to -10 dBm Dynamic Range
- Adjustable Threshold Level
- 0.9 dB Hysteresis
- 1 mA Sink/Source Current
- Stable Over Temperature
- 6 Pin Surface Mount Package

TD

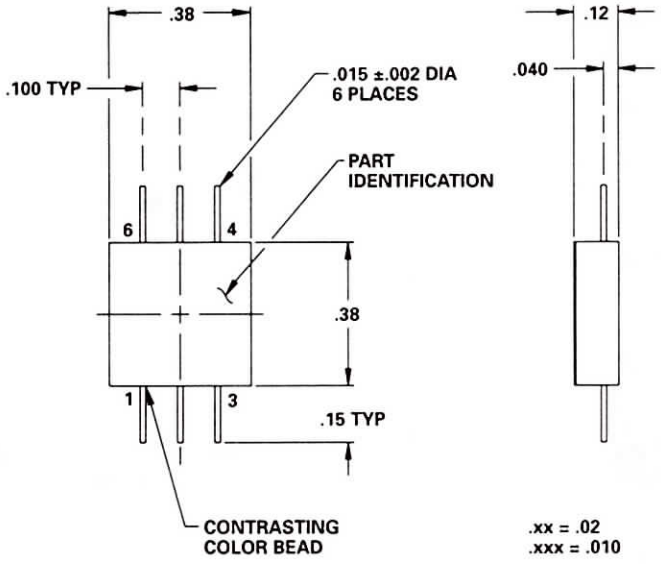

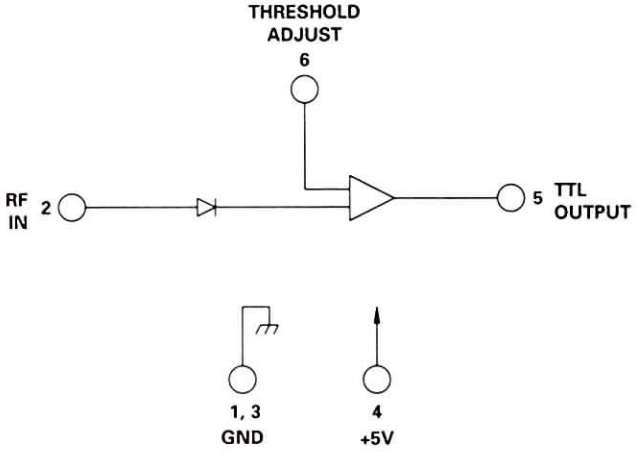

TYPICAL PERFORMANCE
at 25°C

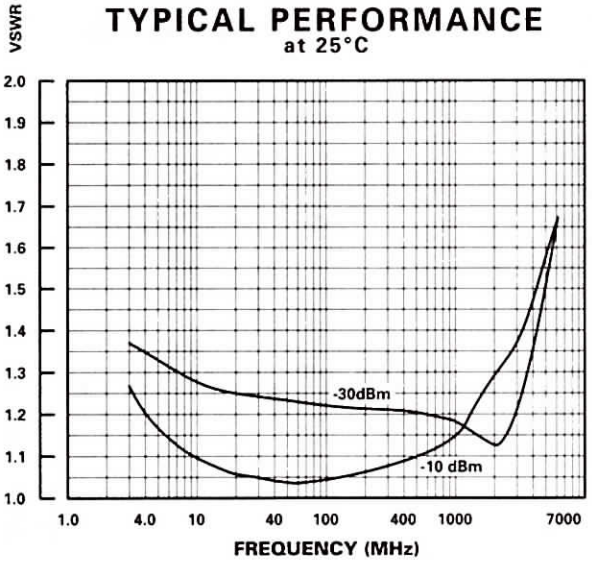

GUARANTEED PERFORMANCE

Parameter		Min	Typ	Max	Units	Conditions
Operating Frequency		10		2000	MHz	
Dynamic Range		-30		-10	dBm	Via an External Resistor Control
Hysteresis			0.9	1.2	dB	
Temperature Stability			±1.1	±1.5	dB	
Input Flatness			±0.6	±1.0	dB	
Response Time (1)			125	300	µSec	-10 to -25 dBm
			320	400	µSec	-25 to -30 dBm
						50% RF In to 10% / 90% TTL Out
Input VSWR			1.3/1	2/1		
Output Current:	*Source*	1	26		mA	VOH = +2.7V
	Sink	1	3		mA	VOL = +0.5V
DC Current			1.1	5	mA	At +5 VDC
Operating Temperature		-55	+25	+85	°C	TA

(1) Response Time for Input Change > 3 dB Above CW Threshold.
Output Loading 1 m and 80 pF

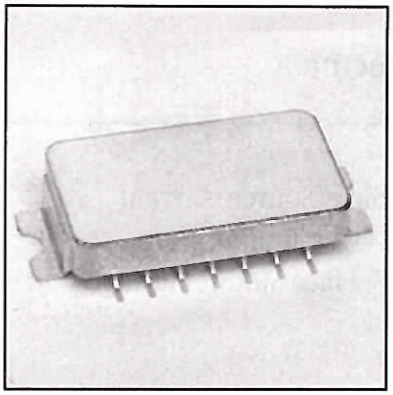

MODEL NUMBER DHD05071

Coupler/Threshold Detector

FEATURES

- 5-50 MHz
- Integrated Coupler and Threshold Detector
- Adjustable Threshold Level
- 0.3 dB Hysteresis
- 1 mA Sink/Source Current
- 14 Pin Surface Mount Package
- See 1988 for DIP Version

TD

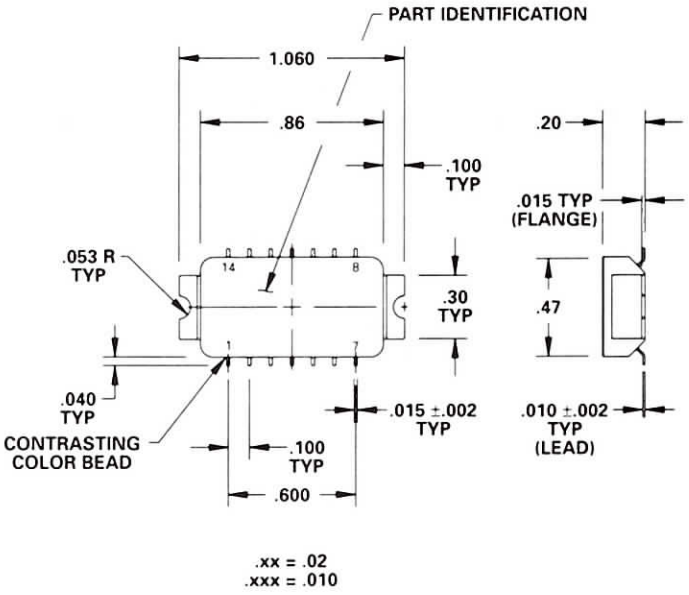

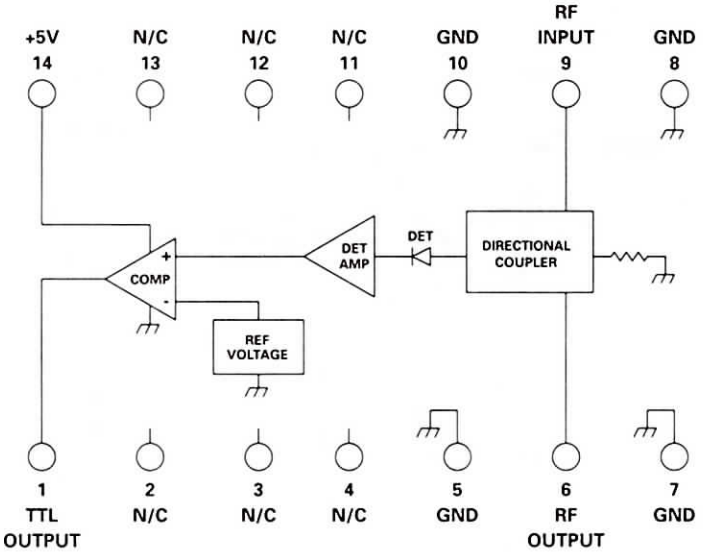

TYPICAL PERFORMANCE

at 25°C

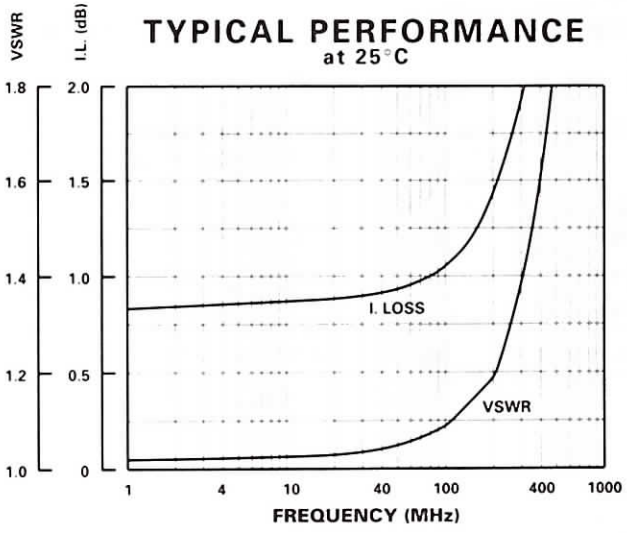

GUARANTEED PERFORMANCE

Parameter		Min	Typ	Max	Units	Conditions
Operating Frequency		5		50	MHz	
Threshold Level		-15	-12.4	-10	mA	Power into the Coupler
Hysteresis			0.3	1.2	dB	
Temperature Stability			±1.5		dB	
Insertion Loss			0.9	1.3	dB	
Input Flatness			±1.0		dB	
Response Time			8	300	µSec	90% / 10% RF to TTL Output
Input VSWR			1.1/1	1.5/1		
Output Current	*Source*	1	2		mA	VOH = +2.7 V
	Sink	1	10		mA	VOL = +0.5 V
RF Power	*No Damage*			+27	dBm	
DC Current			4	10	mA	At +5 V
Operating Temperature		-55	+25	+125	°C	TA

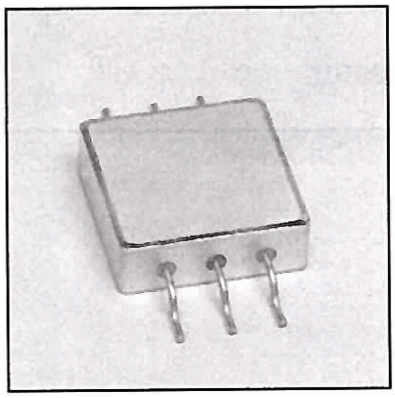

MODEL NUMBER DTD05097

Threshold Detector

FEATURES

- 200-2100 MHz
- Surface Mount Package
- 1 dB Hysteresis
- 15 dB Dynamic Range

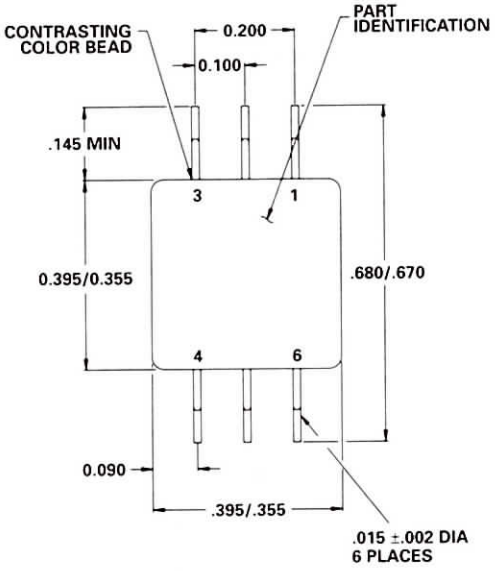

.xx = .02
.xxx = .010

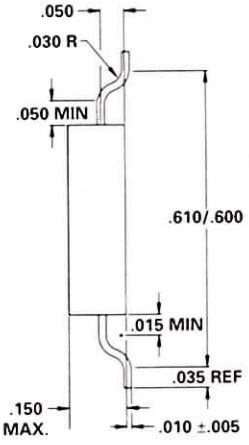

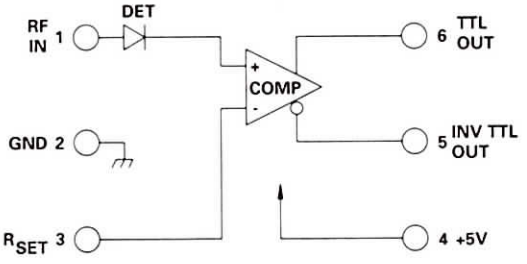

GUARANTEED PERFORMANCE

Parameter		Min	Typ	Max	Units	Conditions
Operating Frequency		200		2100	MHz	
Dynamic Range		-12		+3.0	dBm	
Hysteresis			1.0	1.2	dB	
Temperature Stability			±0.50	±1.5	dB	
Input Flatness			±0.45	±1.5	dB	
Response Time			0.30	5	µSec	0 dBm
Input VSWR			1.09/1	2.0/1		
RF Input Power	*No Damage*			+13	dBm	
Output Current	*Source*		2.80		mA	VOH = +2.7 V
	Sink		16.9		mA	VOL = +0.5 V
DC Current			2.30	5	mA	At +5 VDC
Operating Temperature		-40	+25	+85	°C	TA
Storage Temperature		-55	+25	+85	°C	TA

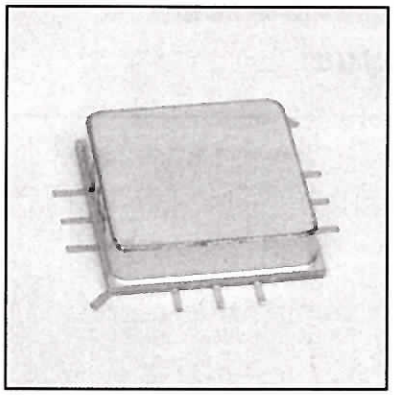

MODEL NUMBER DTD05026

Threshold Detector

FEATURES

- 10-2000 MHz
- -25 to -10 dBm Dynamic Range
- Adjustable Threshold Level
- 1 mA Sink/Source Current
- See DTD01904 to TO-8 Version

TD

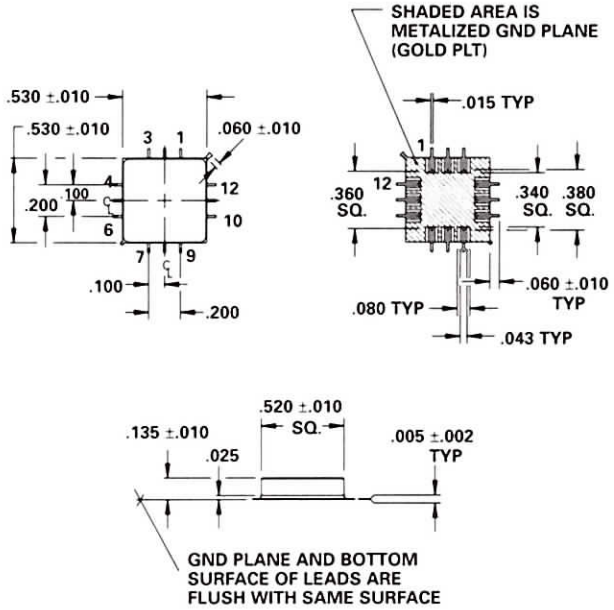

.xx = .02
.xxx = .010

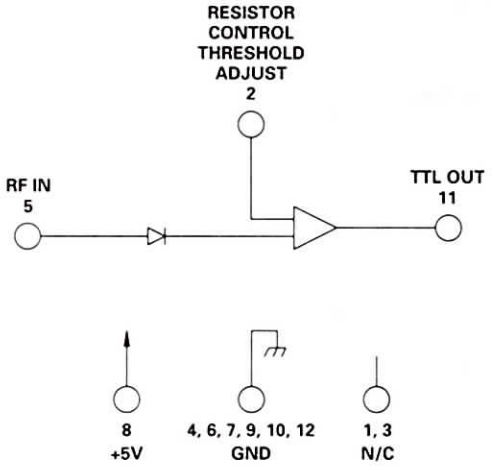

RF INPUT	OUTPUT LOGIC
$P_{IN} < P_{TH}$	"0"
$P_{IN} > P_{TH}$	"1"

TYPICAL PERFORMANCE

at 25°C

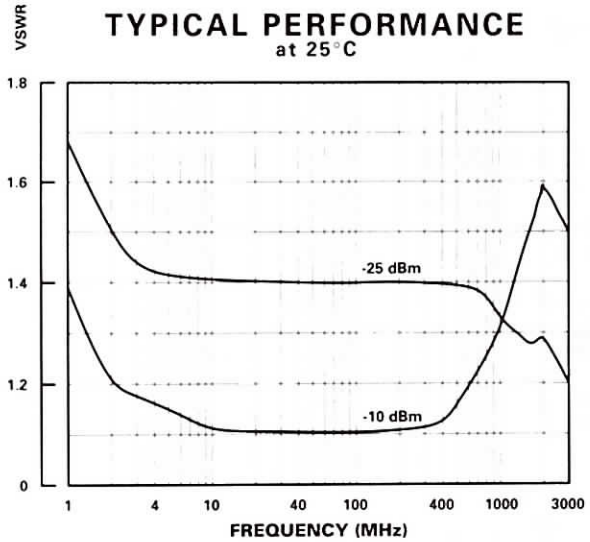

GUARANTEED PERFORMANCE

Parameter		Min	Typ	Max	Units	Conditions
Operating Frequency		10		2000	MHz	
Dynamic Range		-25		-10	dBm	
Hysteresis			0.7	1.2	dB	
Temperature Stability			±0.8	±1.5	dB	
Input Flatness			±0.15	±1.5	dB	
Response Time (See Note)			3.6	5	mSec	@ -10 dBm
Input VSWR			1.5/1	2.0/1		
Output Current:	*Source*	0.5	1.01		mA	VOH = +2.7V
	Sink	1	9.4		mA	VOL = +0.5V
DC Current			4	5	mA	At +5 VDC
RF Power	*No Damage*			+13	dBm	
Operating Temperature		-55	+25	+85	°C	TA

NOTE1: Transition Time For Input Change > 3 dB Above CW Threshold. Output Loading 1 MΩ and 80 pF.

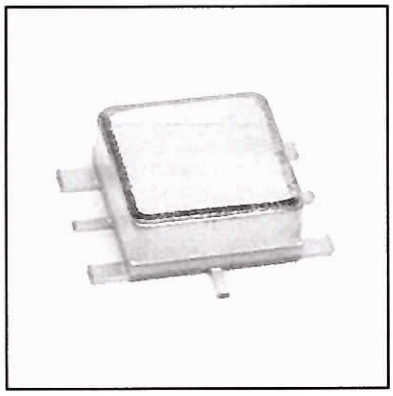

MODEL NUMBER DAD05079

Analog Detector

FEATURES

- 20-2000 MHz
- 25 dB Dynamic Range
- Low Output Resistance
- Low DC Power Consumption
- Pin for Pin Replacement to HP/Avantek PPD-2001 with Improved Performance

TD

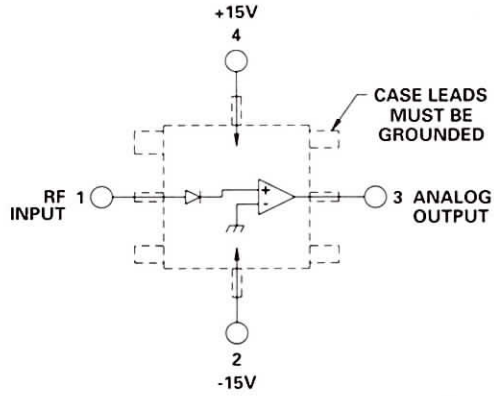

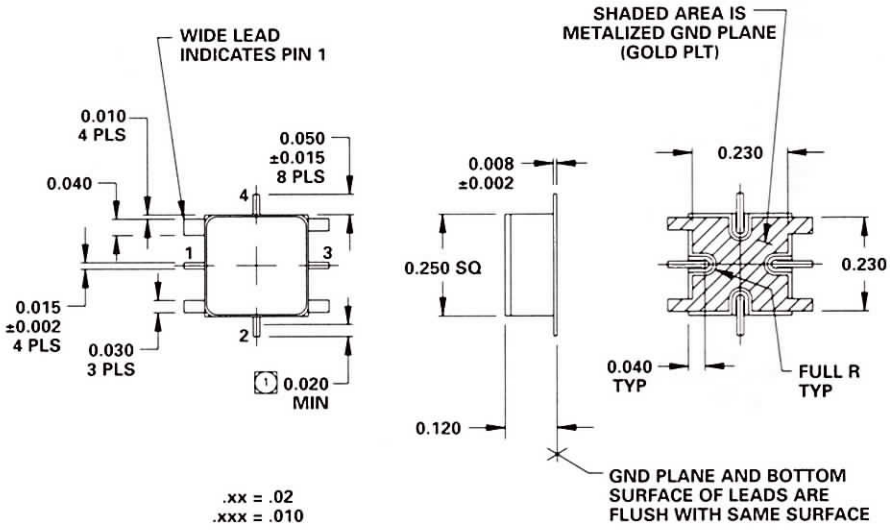

TYPICAL PERFORMANCE

at 25°C

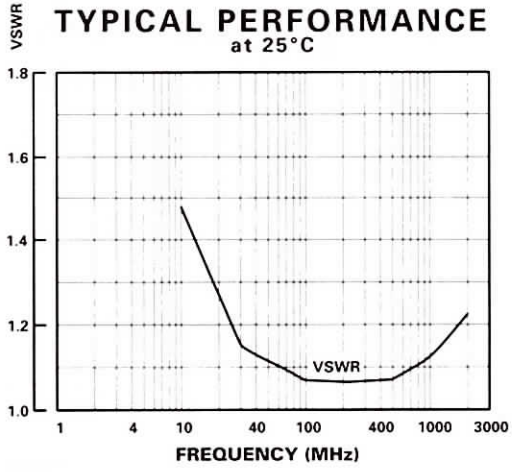

GUARANTEED PERFORMANCE

Parameter	Min	Typ	Max	Units	Conditions
Operating Frequency	20		2000	MHz	
Dynamic Range	-10		+10	dBm	
Input VSWR		1.3/1	1.8/1		
Analog Output	0.8	0.9		V	P = 0 dBm
		0.19		V	P = -10 dBm
Input Flatness		±0.3	±1.0	dB	0 to -10 dBm
Temperature Stability		±0.4	±1.0	dB	0 to -10 dBm
Tangential Sensitivity		-38		dBm	
Output Resistance		1		OHMS	
Output Offset	-5	0	+5	mV	No Input Power
Output Offset Drift		±5		mV	Over Temperature
RF to Video Isolation		50		dB	
Rise Time		2		µSec	
DC Current		1.4	2	mA	+15V
		1.5	2	mA	-15V
Input Power			+20	dBm	No Damage
Operating Temperature	-55	+25	+125	°C	TA

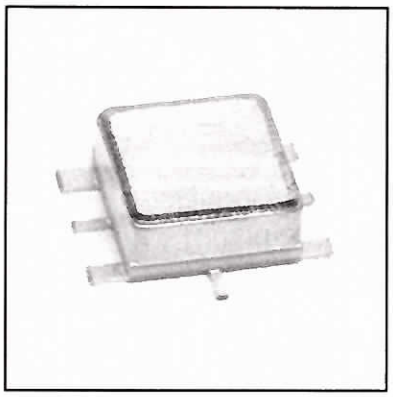

MODEL NUMBER CTD05076

Threshold Detector

FEATURES

- 100-6000 MHz
- Dynamic Range -10 to +10 dBm
- Hysteresis 1.0 dB
- Input Flatness ±1.0 dB

TD

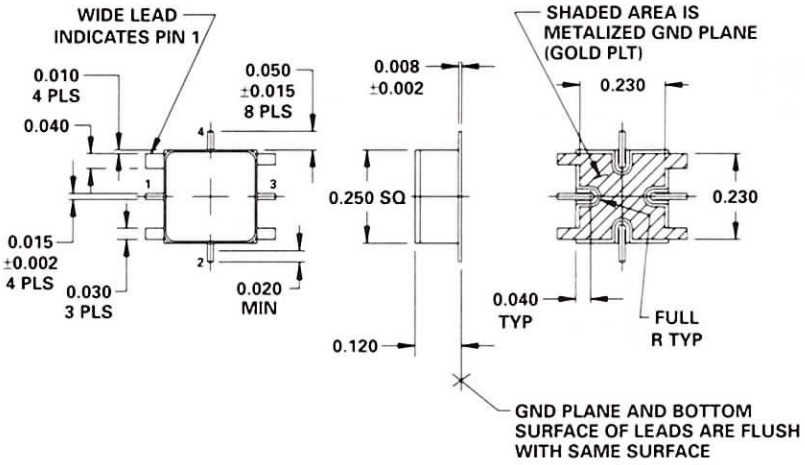

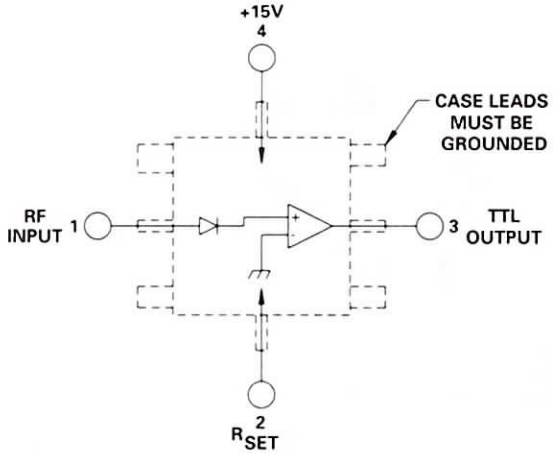

GUARANTEED PERFORMANCE

Parameter		Min	Typ	Max	Units	Conditions
Operating Frequency		100		6000	MHz	
Dynamic Range		-10		+10	dBm	
RF Input Power				+15	dBm	
Propagation Delay			1.5	3	µSec	
Hysteresis			1.0		dB	
Temperature Stability				±0.7	dB	At +10 dBm
				±1.0	dB	At 0 dBm
				±1.5	dB	At -10 dBm
Input Flatness		-1.0		+1.0	dB	
Rise Time				100	nSec	90% / 10% or 10% / 90% RF
Fall Time				250	nSec	90% / 10% or 10% / 90% RF
Input VSWR				2.0/1		
Output Current	*Source*	3			mA	Output Short
	Sink	2			mA	VOL = +0.7 V
DC Current				15	mA	At +15 VDC
Operating Temperature		-55	+25	+85	C	TA

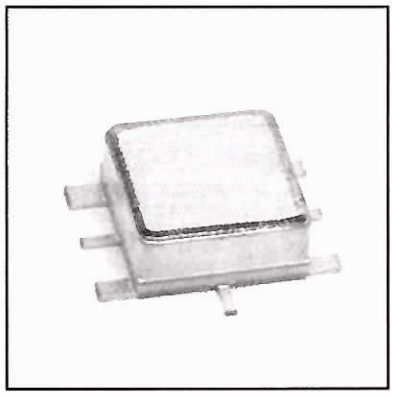

MODEL NUMBER DTD05080

Threshold Detector

FEATURES

- 400-450
- 1.0 dB Hysteresis
- Input / Output Operating Range ±10 dB
- Surface Mount Package

TD

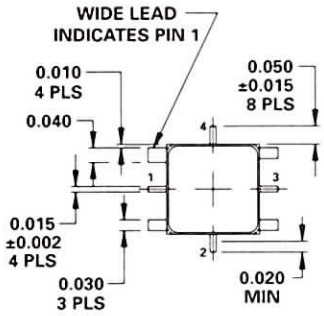

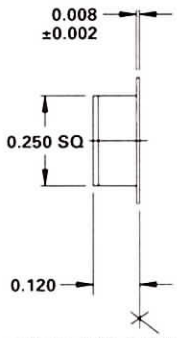

GND PLANE AND BOTTOM SURFACE OF LEADS ARE FLUSH WITH SAME SURFACE

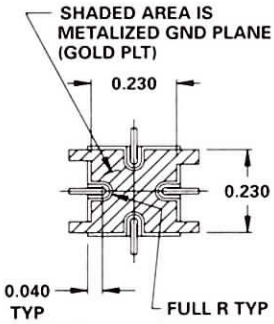

.xx = .02
.xxx = .010

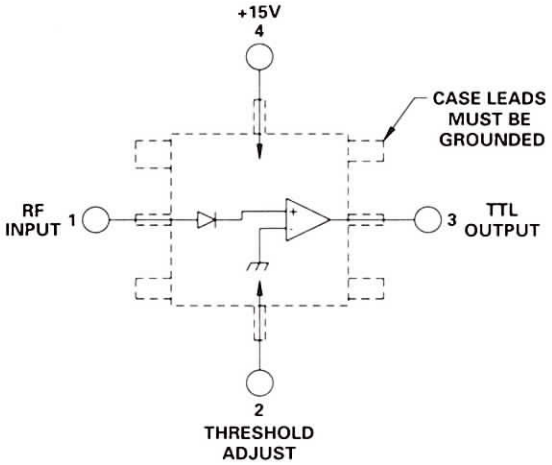

TYPICAL PERFORMANCE
at 25°C

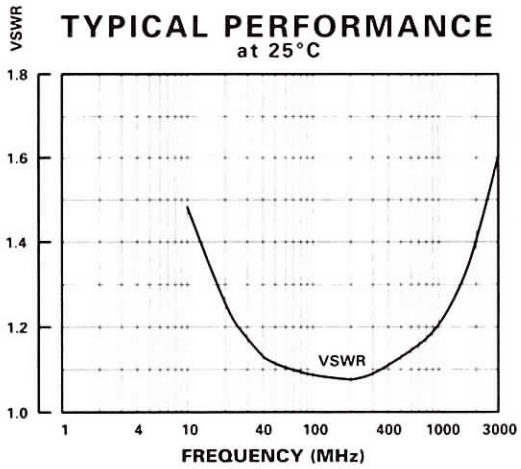

GUARANTEED PERFORMANCE

Parameter		Min	Typ	Max	Units	Conditions
Operating Frequency		400		450	MHz	
Dynamic Range		-10		+10	dBm	
Hysteresis			1.0	1.2	dB	
Temperature Stability			±.15	±0.5	dB	
Input Flatness			±.35	±0.5	dB	
Transition Time			2.3	3	µSec	90% / 10% or 10% / 90% RF
Input VSWR			1.12/1	1.5/1		
Output Current	*Source*	3	8.6		mA	Output Short Circuit Current
	Sink	2	24		mA	VOL = +0.7 V
DC Current			11	15	mA	+15 V
Operating Temperature		0	+25	+60	°C	TA

DAICO *Industries*

310.507.3242 • FAX 310.507.5701 • www.daico.com

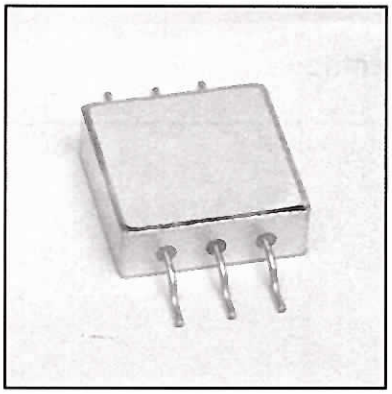

MODEL NUMBER DTD05045

Threshold Detector

FEATURES

- 500-4000 MHz
- -25 to 0 dBm Dynamic Range
- Adjustable Threshold Level
- 1.6 dB Hysteresis
- 1 mA Sink/Source Current
- Stable Over Temperature
- 6 Pin Surface Mount Package

TD

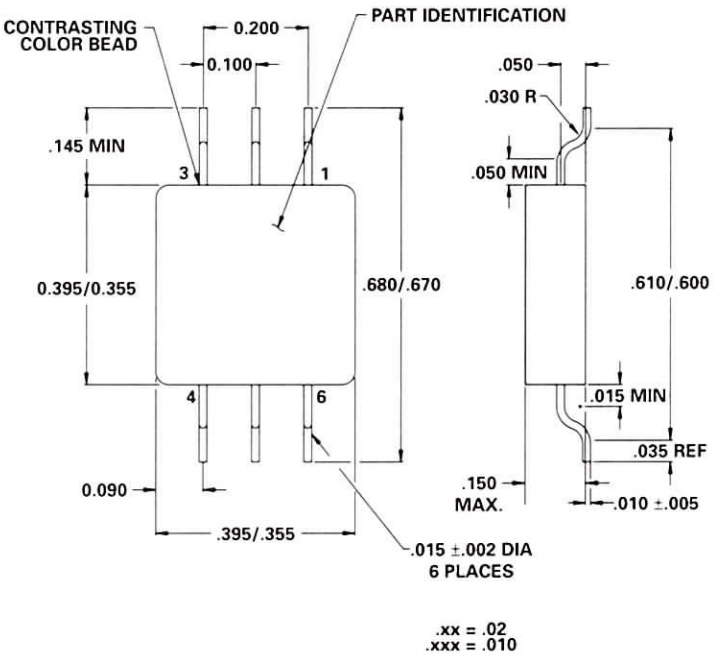

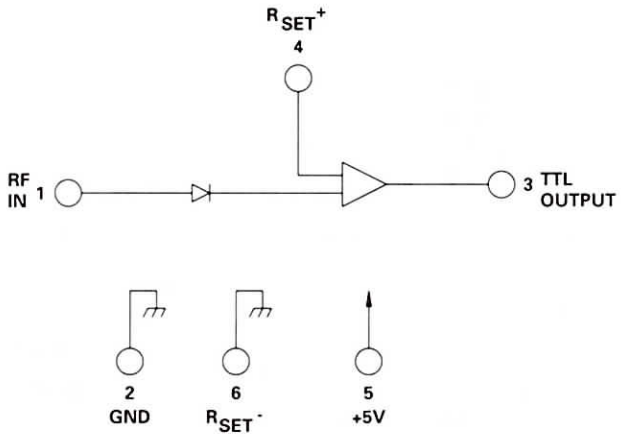

TYPICAL PERFORMANCE
at 25°C

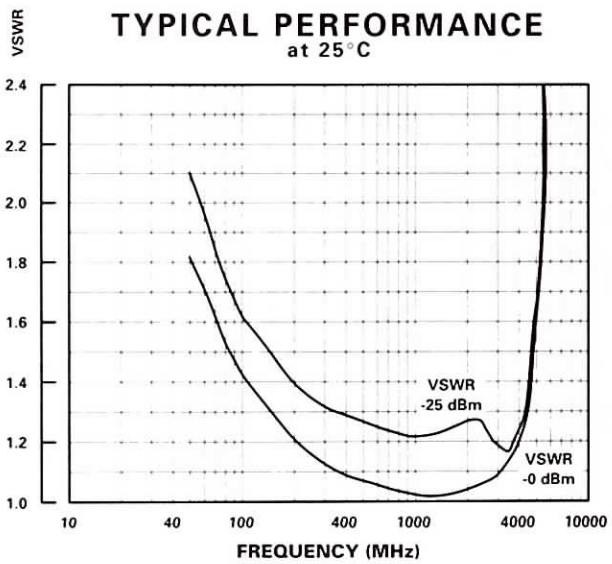

GUARANTEED PERFORMANCE

Parameter		Min	Typ	Max	Units	Conditions
Operating Frequency		500		4000	MHz	
Dynamic Range		-25		0	dBm	Via an External Resistor
Resistance $R_{Set}(+,-)$			40		OHMS	-25 dBm at RF In
			12.5		KOHMS	0 dBm at RF In
Hysteresis			1.6		dB	
Temperature Stability			±0.8	±1	dB	
Input Flatness			±0.3		dB	
Response Time	(2)		180	400	µSec	50% RF In to 10% / 90% TTL Out
Input VSWR			1.3/1	2.0/1		
Output Current:	*Source*	2	28		mA	VOH = +2.7V
	Sink	1	3		mA	VOL = +0.5V
DC Current			3	10	mA	At +5 VDC
Operating Temperature		-55	+25	+85	°C	TA

Notes: 1. TTL High Indicates P_{In} Greater than Threshold Settings

(2) Response Time is for Input Change > 3 dB Above CW Threshold Output Loading 1M Ω and 80 pF.

Program Management

- Just In Time
- Gantt and PERT Used
- MRP II Mainframe Based

With many customers now operating "JIT" (Just in Time) and using vendor rating systems, it is important that suppliers like Daico recognize the key role they play in the success of the program.

Prior to order placement, a critical path analysis is performed using Gantt and PERT techniques to determine potential schedule and resource conflicts. Daico program management engineering, manufacturing and applications teams then establish the delivery schedule. This delivery date is based upon the required design effort, lead-time for the BOM (Bill of Materials) and assembly time.

Daico has also implemented a mainframe-based MRP II System. This enables us to determine material requirements, allocate and schedule inventories, as well as automatically generate material requisitions. Together with our unique "Back Sum" (Backlog Summary) analysis program, the MRP II System helps to ensure that upon completion of the design phase, materials will be available and sufficient manufacturing capacity allocated to guarantee that the delivery commitment is met.

Daico is unusual in that all engineering prototypes are built by the manufacturing group. This means that all designs, once released by engineering, are manufacturable, and negates the requirement for further production engineering.

The customer service group, the cognizant sales engineer and the program manager are now able to monitor the status of all WIP (work-in-progress) against the projected delivery dates. This further demonstrates Daico's across-the-board commitment to customer satisfaction.

Contract Manufacturing

- Build to Print
- Specification Compliant

The contract manufacturing industry is growing as manufacturers increasingly look toward a more cost-effective approach to an in-house assembly. With this in mind, Daico now offers its unique manufacturing capabilities to its customers via Contract Manufacturing or Build-to-Print services. By guaranteeing absolute confidentiality on customer designs, Daico is able to offer both its services as technical partner to its customers for both simple and more complex assemblies.

Daico has demonstrated that it can cost effectively produce specification-compliant products and assemblies using either customer procured or Daico sourced materials. Daico design and process engineers also participate with the customer in value engineering to further reduce product cost.

Daico welcomes the opportunity to discuss the subassemblies or HDMIC's that you are currently procuring or building internally. We specialize in the design, manufacturing and delivery of subassemblies and HDMIC's that contain one or more MMIC, amplifier, LNA, phase shifter, switch, attenuator or mixer.

Quality Assurance

- MIL-I-45208A Inspection System
- MIL Equivalent Screening & Qualification
- SPC (Statistic Process Control)
- DOD-STD-1686 ESD
- TQM (Total Quality Management)

Daico's engineering, manufacturing and quality teams have demonstrated conclusively that using the highest grade components, incorporating a well established material handling system and adhering strictly to proven processes and controls are the most direct and sustaining paths to high manufacturing yields, low rejection rates and customer satisfaction.

Our comprehensive Quality Assurance Program is integrated throughout the operational and engineering functions of the company. Adherence to the requirements to MIL-I-45208A is guaranteed by incorporating extensive mechanical and electrical testing during the manufacturing process, and is monitored using high quality video microscopes.

Daico is presently compliant with ISO 9000 line certifications and utilizing statistical process control in accordance with JEDEC Standard 19 and EIA-STD-557.

DOD-STD-1686 ESD Programs and Total Quality Management structured around DOD-STD-5000.51-G, are used in all assembly, test and inspection areas.

Daico's Quality Program

Daico Industries Engineering and Manufacturing teams have proven conclusively that high quality is the most direct and sustaining path to increased profits. Our comprehensive Quality Assurance Program is integrated throughout all the various operational and engineering functions within the company and meets the requirements of MIL-I-45208A. The quality element in Daico Industries components is planned and built into all the following functions:

- PREPLANNING
  - Customer source control drawing review
  - Contract/P.O. Review
  - Work instruction initiation and maintenance
  - Application Engineering/customer interface
  - Quality Engineering/customer interface

- DESIGN
  - Reliability/survivability, designed consideration
  - Engineering model approach
  - Formal design review
  - Standardized process/circuit approach
  - Engineer support/follow up in manufacturing/test
  - MTBF analysis

- MATERIAL
  - Certified high reliability procurements
  - Positive control of non-conforming materials

- MANUFACTURING
  - Comprehensive process controls
  - Quality auditing
  - 100% tab and assembly inspection
  - Quality documentation
  - Positive control of non-conforming material
  - Corrective action system
  - Personnel training and certification
  - State-of-art assembly/inspection equipment
  - Automatic, computer-controlled bonding and die attach equipment
  - Class 100,000 Clean room per FED-STD-209
  - ESD Control Program

- TESTING
  - Comprehensive test program (please see chart)
  - Trained/certified technicians
  - State-of-the-art automatic test equipment
  - ATP-Engineering/customer interface

TYPICAL MIC ASSEMBLE CYCLE

ADDITIONAL ENVIRONMENTAL TESTING AVAILABLE

Vibration:	MIL-STD-202 Method 204 64g RMS, 1.5 hrs. each axis
Mechanical Shock:	MIL-STD-883 Method 2002 Condition C, 3000g Y axis
Moisture Resistance:	MIL-STD-883 Method 1004
Salt Atmosphere:	MIL-STD-883 Method 1009
Thermal Shock:	MIL-STD-883 Method 1011 Condition B, 15 cycles
Lead Integrity:	MIL-STD-883 Method 2004 Condition B_2
Solderability:	MIL-STD-833 Method 2003 260°C ±10°C
Resistance to Solvents:	MIL-STD-883 Method 2015

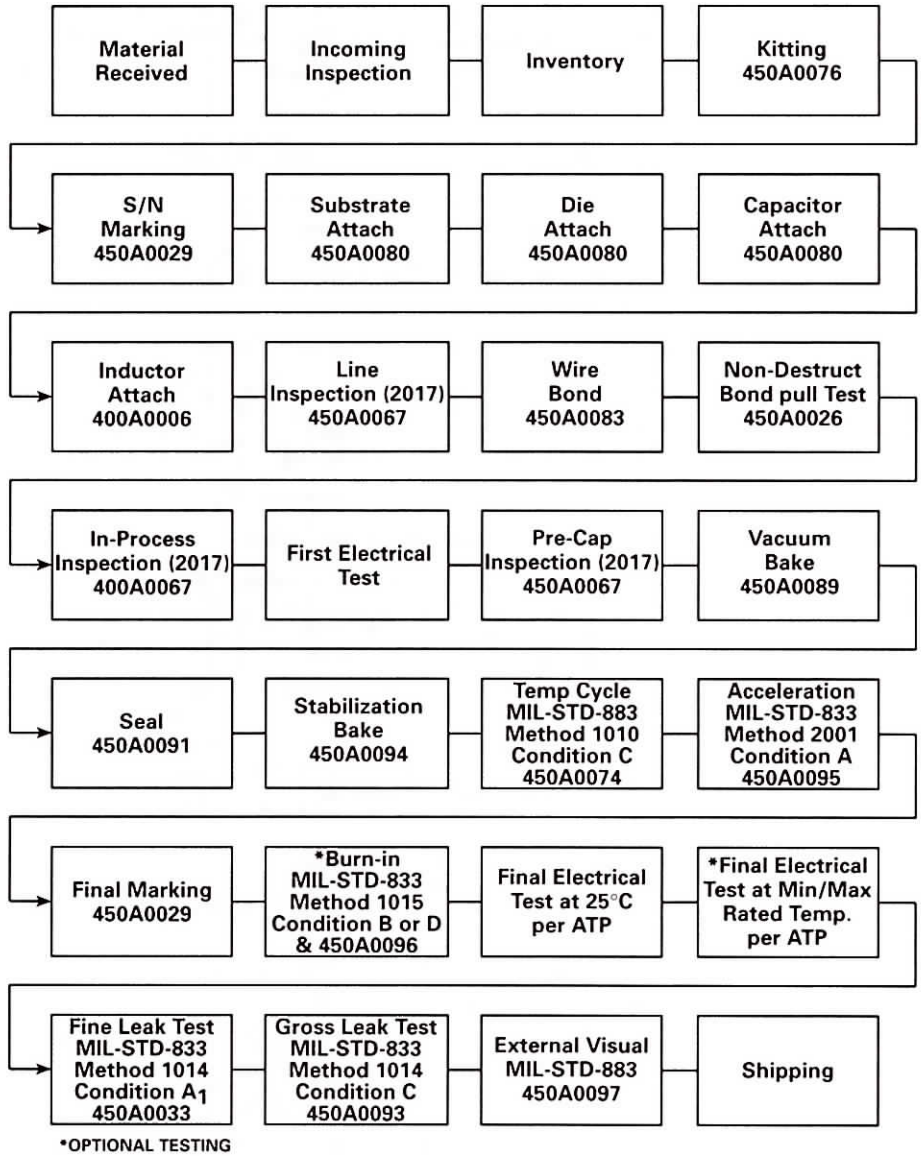

*OPTIONAL TESTING

TYPICAL DISCRETE ASSEMBLE CYCLE

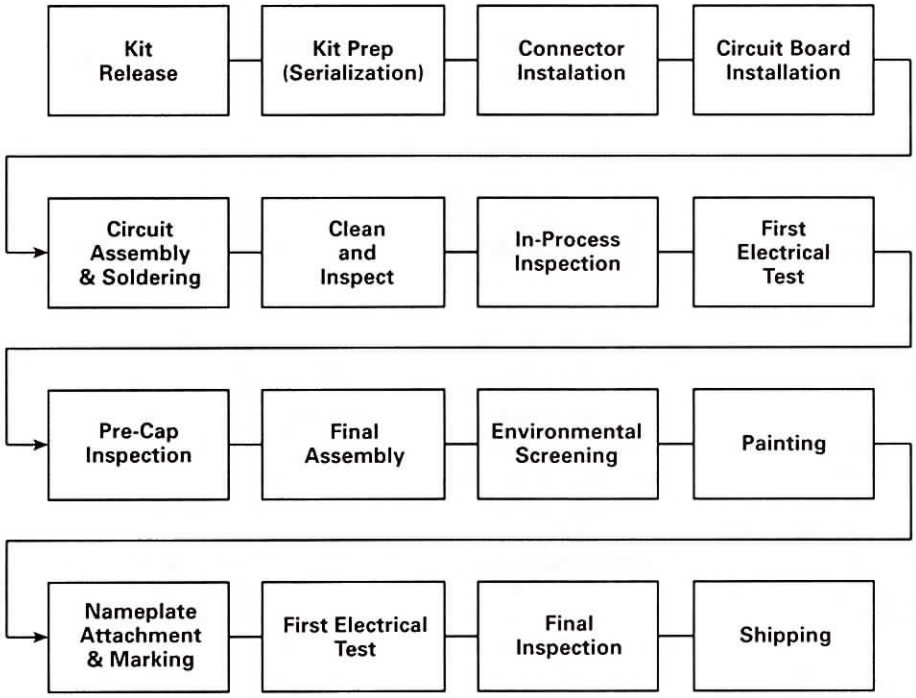

ADDITIONAL ENVIRONMENTAL TESTING AVAILABLE

Vibration:	MIL-STD-202 Method 204 64g RMS, 1.5 hrs. each axis
Thermal Shock:	Per Applicable Document

	STANDARD		CLASS B1, B2, OR B3 OPTIONAL AT ADDITIONAL COST							
	DAICO CLASS B4 (NOTE 1)		DAICO CLASS B3 (NOTE 2)		DAICO CLASS B2 (NOTE 3)		DAICO CLASS B1 (NOTE4)		MIL-STD-833 C CLASS B (9)	
SCREEN	**METHOD**	**RQMT**	**METHOD**	**RQMT**	**METHOD**	**RQMT**	**METHOD**	**RQMT**	**METHOD**	**RQMT**
Internal Visual (Pre-Cap)	2017.6	100%	2017.6	100%	2017.6	100%	2017.6	100%	2017.6	100%
Stablization Bake Paragraph 3.4.4 of 5008	N/A		Method 1008.2 24 Hrs. Min Cond. C 150°C	100%	Method 1008.2 24 Hrs. Min Cond. C 150°C	100%	Method 1008.2 24 Hrs. Min Cond. C 150°C	100%	Method 1008.2 24 Hrs. Min Cond. C 150°C	100%
Temperature Cycling	Not Required		1010 Cond. C -65°C to +150°C 10 Cycles Min	100%	1010 Cond. C -65°C to +150°C 10 Cycles Min	100%	1010 Cond. C -65°C to +150°C 10 Cycles Min	100%	1010 Cond. C -65°C to +150°C 10 Cycles Min	100%
Constant Acceleration or Mechanical Shock	Not Required		2001 Cond. A (5000g's) Y1 Plane Only	100%	2001 Cond. A (5000g's) Y1 Plane Only	100%	2001 Cond. A (5000g's) Y1 Plane Only	100%	2001 Cond. A (Y1 Plane Only) 2002 Cond. B	100%
Interim Electrical Parameters	Go / No Go Optional	100%	Per Spec Rqmt Optional	100%	Per Spec Rqmt Optional	100%	Per Spec Rqmt Optional	100%	Optional	
Burn-in-test	Not required		N/A		1015 160 Hrs. @ 125°C Min	100%	1015 160 Hrs. @ 125°C Min	100%	1015 160 Hrs. @ 125°C Min	100%
Final Electrical Test	Attributes Go / No Go	1.5%	Variable 5008, Spec Rqmt		Variable 5008, Spec Rqmt		Variable 5008, Spec Rqmt		5008, Spec Reqt	
@ 25°C	Note 8	AQL	Note 8	100%	Note 8	100%	Note 8	100%		100%
Max / Min Temp	Not Required		Not Required		Not Required		5008, Spec Rqmt	100%	5008, Spec Rqmt	100%
Switching Speed @ Max / Min Temp	Not Required		Not Required		Not Required		Not Required		Not Required	
Switching Speed @ 25°C	Not Required		5008, Spec Rqmt	AQL (6)	5008, Spec Rqmt	AQL (6)	5008, Spec Rqmt	100%	5008, Spec Rqmt	100%
Functional Test @ 25°C	Not Required		5008, Spec Rqmt	100%	5008, Spec Rqmt	100%	5008, Spec Rqmt	100%	5008, Spec Rqmt	100%
Seal: Fine	1014 Cond. A	1.5AQL	1014 Cond. A	100%	1014 Cond. A	100%	1014 Cond. A	100%	1014 Cond. A or B	100%
Gross	1014 Cond. C	1.5AQL	1014 Cond. C	100%	1014 Cond. C	100%	1014 Cond. C	100%	1014 Cond. C	100%
Quality Conformance Testing	N/A		N/A		N/A		Note (5)		5008 (Para 3.5)	
External Visual	450A0097	100%	450A0097	100%	450A0097	100%	450A0097	100%	2009.8	100%

Notes:
1) Daico Class B4 Screening provided, unless otherwise specified.
2) Daico Class B3 Screening is identical to Class B1 except Burn-in and temperature testing has been deleted.
3) Daico Class B2 is identical to Daico Class B1, including Burn-in, except testing at temperature extremes has been deleted.
4) Daico Class B1 is similar to MIL-STD-883C 5008.5 Table VIII only.
5) Quality Conformance Testing will be performed when required, specified and paid for by customer.
6) AQL Levels to be specified by customer.
7) PIND, Internal Water Vapor, Radiographic Analysis available upon Special Request.
8) Variable data on individual devices available at extra cost on B1, B2, B3 devices. Attribute data only, available on B4 devices at extra cost.
9) MIL-STD-883 Class B Screening shown for comparison purposes only.

VSWR vs. Return Loss (R)

VSWR	RdB	VSWR	RdB	VSWR	RdB	VSWR	RdB	VSWR	RdB
1.001	66.025	1.060	30.714	1.138	23.803	1.480	14.264	5.400	3.255
1.002	60.009	1.061	30.575	1.140	23.686	1.490	14.120	5.600	3.136
1.003	56.491	1.062	30.438	1.142	23.571	1.500	13.979	5.800	3.025
1.004	53.997	1.063	30.303	1.144	23.457	1.520	13.708	6.000	2.923
1.005	52.063	1.064	30.171	1.146	23.346	1.540	13.449	6.200	2.827
1.006	50.484	1.065	30.040	1.148	23.235	1.560	13.201	6.400	2.737
1.007	49.149	1.066	29.912	1.150	23.127	1.580	12.964	6.600	2.653
1.008	47.993	1.067	29.785	1.152	23.020	1.600	12.736	6.800	2.573
1.009	46.975	1.068	29.661	1.154	22.914	1.620	12.518	7.000	2.499
1.010	46.064	1.069	29.538	1.156	22.810	1.640	12.308	7.200	2.428
1.011	45.240	1.070	29.417	1.158	22.708	1.660	12.107	7.400	2.362
1.012	44.489	1.071	29.298	1.160	22.607	1.680	11.913	7.600	2.299
1.013	43.798	1.072	29.181	1.162	22.507	1.700	11.725	7.800	2.239
1.014	43.159	1.073	29.066	1.164	22.408	1.720	11.545	8.000	2.183
1.015	42.564	1.074	28.952	1.166	22.311	1.740	11.370	8.200	2.129
1.016	42.007	1.075	28.839	1.168	22.215	1.760	11.202	8.400	2.078
1.017	41.485	1.076	28.728	1.170	22.120	1.780	11.039	8.600	2.029
1.018	40.993	1.077	28.619	1.172	22.027	1.800	10.881	8.800	1.983
1.019	40.528	1.078	28.511	1.174	21.934	1.820	10.729	9.000	1.938
1.020	40.086	1.079	28.405	1.176	21.843	1.840	10.581	9.200	1.896
1.021	39.867	1.080	28.299	1.178	21.753	1.860	10.437	9.400	1.855
1.022	39.667	1.081	28.196	1.180	21.664	1.880	10.298	9.600	1.816
1.023	38.885	1.082	28.093	1.182	21.576	1.900	10.163	9.800	1.779
1.024	38.520	1.083	27.992	1.184	21.489	1.920	10.032	10.000	1.743
1.025	38.170	1.084	27.892	1.186	21.403	1.940	9.904	11.000	1.584
1.026	37.833	1.085	27.794	1.188	21.318	1.960	9.780	12.000	1.451
1.027	37.510	1.086	27.696	1.190	21.234	1.980	9.660	13.000	1.339
1.028	37.198	1.087	27.600	1.192	21.151	2.000	9.542	14.000	1.243
1.029	36.898	1.088	27.505	1.194	21.069	2.100	8.999	15.000	1.160
1.030	36.607	1.089	27.411	1.196	20.988	2.200	8.519	16.000	1.087
1.031	36.327	1.090	27.318	1.198	20.907	2.300	8.091	17.000	1.023
1.032	36.055	1.091	27.226	1.200	20.828	2.400	7.707	18.000	0.966
1.033	35.792	1.092	27.135	1.210	20.443	2.500	7.360	19.000	0.915
1.034	35.537	1.093	27.046	1.220	20.079	2.600	7.044	20.000	0.869
1.035	35.290	1.094	26.957	1.230	19.732	2.700	6.755	22.000	0.790
1.036	35.049	1.095	26.869	1.240	19.401	2.800	6.490	24.000	0.724
1.037	34.816	1.096	26.782	1.250	19.085	2.900	6.246	26.000	0.668
1.038	34.588	1.097	26.697	1.260	18.783	3.000	6.021	28.000	0.621
1.039	34.367	1.098	26.612	1.270	18.493	3.100	5.811	30.000	0.579
1.040	34.151	1.099	26.528	1.280	18.216	3.200	5.617	32.000	0.543
1.041	33.941	1.100	26.444	1.290	17.949	3.300	5.435	34.000	0.511
1.042	33.763	1.102	26.281	1.300	17.692	3.400	5.265	36.000	0.483
1.043	33.536	1.104	26.120	1.310	17.445	3.500	5.105	38.000	0.457
1.044	33.341	1.106	25.963	1.320	17.207	3.600	4.956	40.000	0.434
1.045	33.150	1.108	25.809	1.330	16.977	3.700	4.815	42.000	0.414
1.046	32.963	1.110	25.658	1.340	16.755	3.800	4.682	44.000	0.395
1.047	32.780	1.112	25.510	1.350	16.540	3.900	4.556	46.000	0.378
1.048	32.602	1.114	25.364	1.360	16.332	4.000	4.437	48.000	0.362
1.049	32.427	1.116	25.221	1.370	16.131	4.100	4.324	50.000	0.347
1.050	32.256	1.118	25.081	1.380	15.936	4.200	4.217	55.000	0.316
1.051	32.088	1.120	24.943	1.390	15.747	4.300	4.115	60.000	0.290
1.052	31.923	1.122	24.808	1.400	15.563	4.400	4.018	65.000	0.267
1.053	31.762	1.124	24.675	1.410	15.385	4.500	3.926	70.000	0.248
1.054	31.604	1.126	24.544	1.420	15.211	4.600	3.838	75.000	0.232
1.055	31.449	1.128	24.415	1.430	15.043	4.700	3.753	80.000	0.217
1.056	31.297	1.130	24.289	1.440	14.879	4.800	3.673	85.000	0.204
1.057	31.147	1.132	24.164	1.450	14.719	4.900	3.596	90.000	0.193
1.058	31.000	1.134	24.042	1.460	14.564	5.000	3.522	95.000	0.183
1.059	30.856	1.136	23.921	1.470	14.412	5.200	3.383	100.000	0.174

Power Conversion Table

dBm	Watts	dBm	Watts	dBm	Watts	dBm	Watts
27.0	501 mw	35.4	3.47	43.8	23.99	52.2	166
27.2	525 mw	35.6	3.63	44.0	25.12	52.4	174
27.4	550 mw	35.8	3.80	44.2	26.30	52.6	182
27.6	575 mw	36.0	3.98	44.4	27.54	52.8	191
27.8	603 mw	36.2	4.17	44.6	28.84	53.0	200
28.0	631 mw	36.4	4.37	44.8	30.20	53.2	209
28.2	661 mw	36.6	4.57	45.0	31.62	53.4	219
28.4	692 mw	36.8	4.79	45.2	33.11	53.6	229
28.6	724 mw	37.0	5.01	45.4	34.67	53.8	240
28.8	759 mw	37.2	5.25	45.6	36.31	54.0	251
29.0	794 mw	37.4	5.50	45.8	38.02	54.2	263
29.2	832 mw	37.6	5.75	46.0	39.81	54.4	275
29.4	871 mw	37.8	6.03	46.2	41.69	54.6	288
29.6	912 mw	38.0	6.31	46.4	43.65	54.8	302
29.8	955 mw	38.2	6.61	46.6	45.71	55.0	316
30.0	1.00	38.4	6.92	46.8	47.86	55.2	331
30.2	1.05	38.6	7.24	47.0	50.12	55.4	347
30.4	1.10	38.8	7.59	47.2	52.48	55.6	363
30.6	1.15	39.0	7.94	47.4	54.95	55.8	380
30.8	1.20	39.2	8.32	47.6	57.54	56.0	398
31.0	1.26	39.4	8.71	47.8	60.26	56.2	417
31.2	1.32	39.6	9.12	48.0	63.10	56.4	437
31.4	1.38	39.8	9.55	48.2	66.07	56.6	457
31.6	1.45	40.0	10.0	48.4	69.18	56.8	479
31.8	1.51	40.2	10.47	48.6	72.44	57.0	501
32.0	1.58	40.4	10.96	48.8	75.86	57.2	525
32.2	1.66	40.6	11.48	49.0	79.43	57.4	550
32.4	1.74	40.8	12.02	49.2	83.18	57.6	575
32.6	1.82	41.0	12.59	49.4	87.10	57.8	603
32.8	1.91	41.2	13.18	49.6	91.20	58.0	631
33.0	2.00	41.4	13.18	49.8	95.50	58.2	661
33.2	2.09	41.6	14.45	50.0	100	58.4	692
33.4	2.19	41.8	15.14	50.2	105	58.6	724
33.6	2.29	42.0	15.85	50.4	110	58.8	759
33.8	2.40	42.2	16.60	50.6	115	59.0	794
34.0	2.51	42.4	17.38	50.8	120	59.2	832
34.2	2.63	42.6	18.20	51.0	126	59.4	871
34.4	2.75	42.8	19.05	51.2	132	59.6	912
34.6	2.88	43.0	19.95	51.4	138	59.8	955
34.8	3.02	43.2	20.89	51.6	145	60.0	1000
35.0	3.16	43.4	21.88	51.8	151		
35.2	3.31	43.6	22.91	52.0	158		

ORDERING INFORMATION

Terms and Conditions of Sale

1. ORDER OF PRECEDENCE

a) These Terms and Conditions Of Sale and any attachments hereto take precedence over Buyer's additional or different terms and conditions. Neither Daico Industries, Inc. commencement of performance nor delivery shall be deemed or construed as acceptance of Buyer's additional or different terms and conditions.

b) This agreement and any attachments constitute the entire understanding between the parties and supersede any previous communication, representations or agreements, whether verbal or written. No change or modification of any of the terms or conditions herein shall be valid or binding on either party unless in writing and signed by an authorized representative of each party.

2. PAYMENT TERMS

Buyer shall pay all invoices under this agreement within thirty (30) days from date of invoice. Daico Industries, Inc. reserves the right to change the payment terms provided herein, when in Daico Industries, Inc. opinion the financial condition or previous payment record of buyer so warrants that Daico Industries, Inc. the right to assess, and buyer accepts the obligation to pay, interest on delinquent balances at the maximum rate allowed by law, or at such lower rate as Daico Industries, Inc. may at its discretion, determine.

3. PRICE

a) Unless otherwise stated in writing by Daico Industries Inc. on each specific quotation, all price quoted expire thirty (30) days after the date of quotation.

b) All prices quoted are exclusive of any brokerage fees and present or future sales, revenue or excise tax, import duty, or other taxes applicable to the manufacture or sale of any product. Buyer agrees to pay such brokerage fees and separate items on Daico Industries, Inc. invoice. Buyer agrees to provide Daico Industries, Inc. with valid resale or exemption certificate for the products purchased for resale or exempted from taxation, as appropriate.

4. DELIVERY

a) All prices are F.O.B. Daico Industries, Inc. plant (unless otherwise agreed in writing). Buyer will pay all transportation charges.

b) Normally Daico Industries, Inc. will ship in accordance with Buyer's shipping instructions. In the absence of specific instructions or if Buyer's instructions are deemed unsuitable, Daico Industries Inc. reserves the right to ship by the most appropriate method.

c) Title to the products and risk of loss and damage shall pass to the Buyer:

(i) When the F.O.B. point is Daico Industries, Inc. plant, upon delivery to a common carrier; if there be no common carrier, upon delivery to Buyer.

(ii) When the F.O.B. point is Destination, upon tender at that destination.

5. PACKING

All Products shall be packed, if appropriate, for shipment and storage in accordance with standard commercial practices unless otherwise specifically directed in the schedule of the contract.

6. CHANGES AND CANCELLATIONS

Buyer may be subject to an additional charge for the cancellation or a delay in delivery of products any time after an order is received by Daico Industries, Inc., should such cancellation or delay be caused by the Buyer.

7. WARRANTY

Daico Industries, Inc. products are warranted against defects in material and workmanship for a period of one year from the date of shipment. Daico Industries, Inc. will repair or at its option, replace products that prove to be defective in material or workmanship under proper use during the warranty period. This warranty extends only to Daico Industries, Inc. Buyers.

NO OTHER WARRANTIES ARE EXPRESSED OR IMPLIED AND DAICO INDUSTRIES, INC. SPECIFICALLY DISCLAIMS THE IMPLIED WARRANTIES OF MERCHANTABILITY OR FITNESS FOR A PARTICULAR PURPOSE.

A return Material Authorization number must be obtained from Daico Industries, Inc. prior to the return of any material deemed defective or otherwise.

8. FORCE MAJEURE

Daico Industries, Inc. shall not be liable for any cost, damage or penalty relating to shipment delays beyond the reasonable control of Daico Industries, Inc. which affect Daico Industries, Inc. or any Daico Industries, Inc. suppliers, including but not limited to delays caused by: natural disasters; acts of war; acts or omissions of Buyer; fire, strike, riot or government interference; unavailability or shortage of materials, labor, fuel or power through normal commercial channels at customary and reasonable rates; failure or destruction of plant or equipment arising from any cause whatsoever; or transportation failures. The anticipated delivery date shall be deemed extended for a period of time equal to the time lost due to any delay excusable under this provision.

9. CONFIDENTIAL INFORMATION

No information shall be deemed to be given or received in confidence by either parties unless, and to the extent, it is covered by a separate agreement.

PLEASE FAX TO DAICO INDUSTRIES, INC.
FAX# (310) 507-5701

PHASE SHIFTER QUESTIONNAIRE

FREQUENCY		MHz	
RF POWER INPUT		dBm	
PHASE RANGE: STEPS:			
INSERTION LOSS (MAX)		dB	
VSWR			
DRIVER	TTL	CMOS	NONE
SWITCHING SPEED			
50% CONTROL 90% RF			
DC BIAS VOLTAGE CURRENT	V mA		
PACKAGE TYPE			
OPERATING TEMP			

COMMENTS:

CUSTOMER: TELEPHONE:

CONTACT: FAX NO:

PROGRAM:

POTENTIAL:

TIMING:

PLEASE FAX TO DAICO INDUSTRIES, INC.
FAX# (310) 507-5701

SWITCH QUESTIONNAIRE

FREQUENCY		MHz	
RF POWER INPUT		dBm	
FUNCTION & THROWS			
INSERTION LOSS (MAX)	dB		
ISOLATION (MIN)	dB		
VSWR			
REFLECTIVE / MATCHED			
DRIVER TTL		CMOS	NONE
SWITCHING SPEED			
50% CONTROL 90% RF			
DC BIAS VOLTAGE	V		
CURRENT	mA		
PACKAGE TYPE			
OPERATING TEMP			

COMMENTS:

CUSTOMER: _____ TELEPHONE: _____

CONTACT: _____ FAX NO: _____

PROGRAM: _____

POTENTIAL: _____

TIMING: _____

PLEASE FAX TO DAICO INDUSTRIES, INC.
FAX# (310) 507-5701

AMPLIFIER QUESTIONNAIRE

FREQUENCY		MHz
RF POWER INPUT		dBm
GAIN		dB
NOISE FIGURE		dB
VSWR		
SWITCHING SPEED		
50% CONTROL 90% RF		
DC BIAS VOLTAGE	V	
CURRENT	mA	
PACKAGE TYPE		
OPERATING TEMP		

COMMENTS:

CUSTOMER: _____ TELEPHONE: _____

CONTACT: _____ FAX NO: _____

PROGRAM: _____

POTENTIAL: _____

TIMING: _____

PLEASE FAX TO DAICO INDUSTRIES, INC.
FAX# (310) 507-5701

ATTENUATOR QUESTIONNAIRE

FREQUENCY		MHz	
RF POWER INPUT		dBm	
TYPE: DIGITAL		ANALOG	
INSERTION LOSS (MAX)		dB	
ATTENUATION:	RANGE STEPS	dB dB	
VSWR			
DRIVER	TTL	CMOS	NONE
SWITCHING SPEED 50% CONTROL 90% RF			
DC BIAS VOLTAGE CURRENT	V mA		
PACKAGE TYPE			
OPERATING TEMP			

COMMENTS:

CUSTOMER: _____ TELEPHONE: _____

CONTACT: _____ FAX NO: _____

PROGRAM: _____

POTENTIAL: _____

TIMING: _____