MFA

FEATURES

- **1300 - 2100 MHz**
- **4 Bands**
- **1.2 Max Insertion Loss**
- **0.5 dB Flatness**
- **GPO Connectors**

MODEL NO. CSF49110

Switchable Band Pass Filter

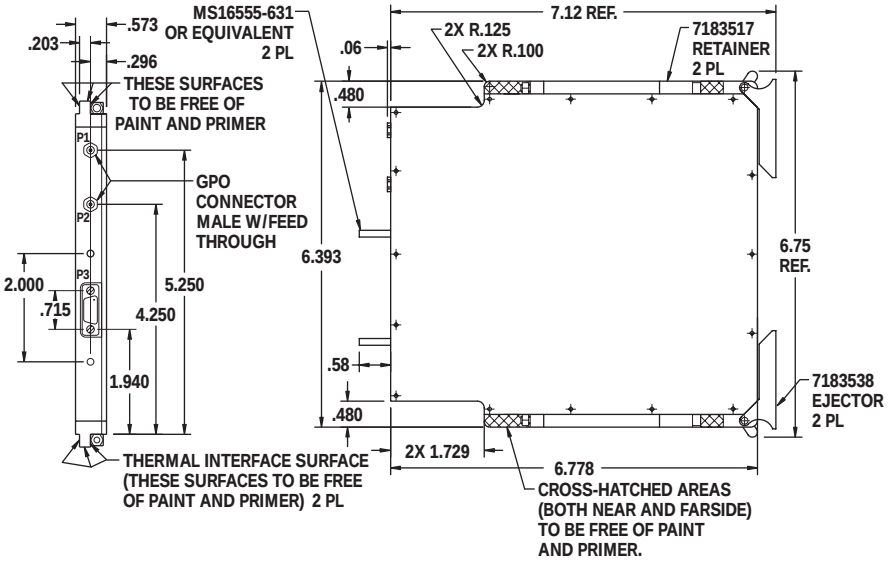

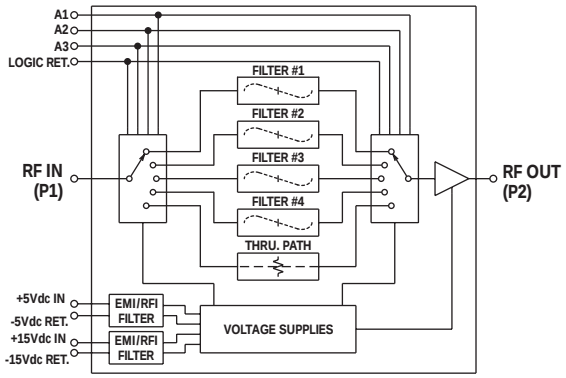

P3 CONNECTOR CHART	
PIN #	DES.
1	+5Vdc IN
2	-15Vdc RET
3	NC
4	NC
5	NC
6	LOGIC A2
7	LOGIC RET
8	LOGIC A1
9	+5Vdc RET
10	-15Vdc IN
11	NC
12	NC
13	NC
14	NC
15	LOGIC A3

GUARANTEED PERFORMANCE

Parameter	Min	Typ	Max	Units	Conditions
Operating Frequency	1300		2100	MHz	
DC Current		123	200	mA	At +5 VDC
		24	70	mA	At -15 VDC
Control Logic					3 Line TTL Control
Control Current			±10	µA	
Noise Figure			+15	dB	
Insertion Loss	-1.25	±0.1	+1.25	dB	
Insertion Loss vrs. Temp.	-1.25	±0.5	+1.25	dB	
VSWR			2.0/1		
Impedance		50		OHMS	
RF Power *Operate*			+10	dBm	
No Damage			+20	dBm	
Operating Temperature	-54	+25	+110	°C	TA