SP5T

FEATURES

- **20 - 600 MHz**
- **High Isolation**
- **+40 dBm 3rd Order Intercept**
- **Non-Reflective**
- **TTL Driver**
- **SMA Connectors**

MODEL NO. 100C1285

PIN Diode SP5T

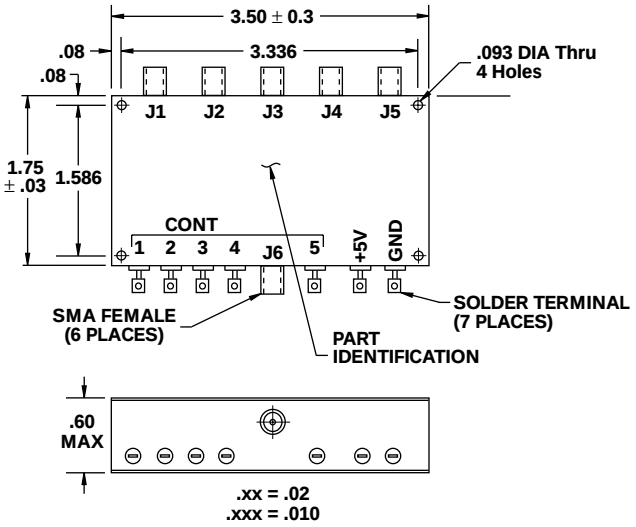

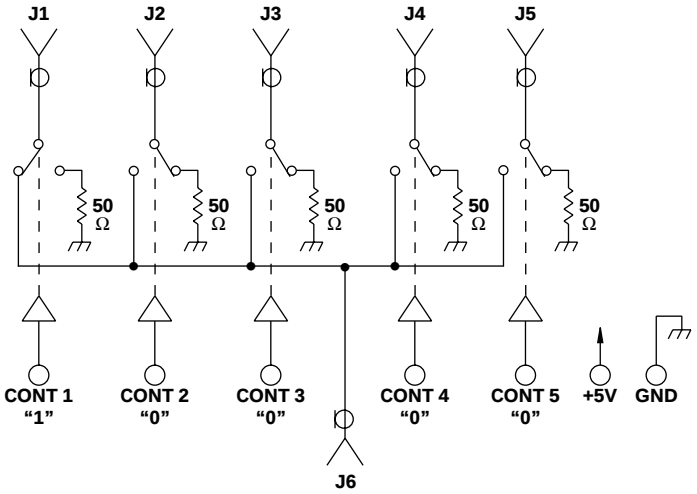

TYPICAL PERFORMANCE
at 25°C

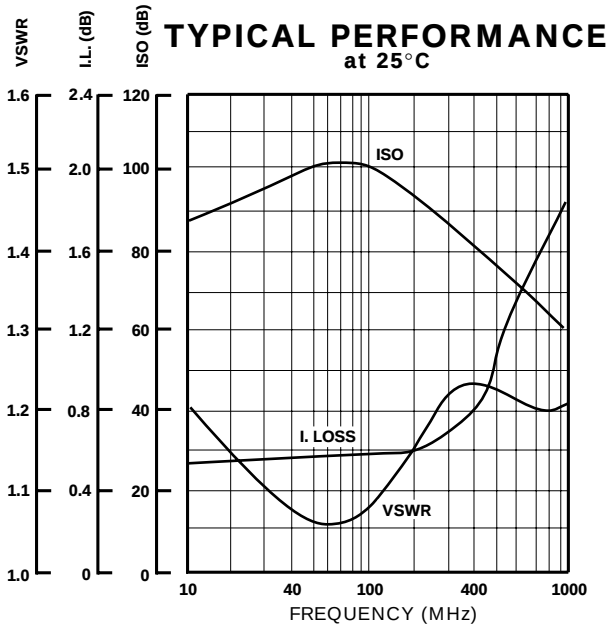

GUARANTEED PERFORMANCE

Parameter	Min	Typ	Max	Units	Conditions
Operating Frequency	20		600	MHz	
DC Current		175		mA	At +5 VDC Supply
Control Type		TTL			Load Factor 1 Logic "0" = Isolation Logic "1" = Thru
Control Current *High*			100	µA	VIH = 2.7 V
Low			-400	µA	VIL = +0.5 V
Insertion Loss		0.6	0.8	dB	20 - 200 MHz
		0.8	1.0	dB	200 - 350 MHz
		1.2	1.8	dB	350 - 600 MHz
Isolation	80	90		dB	20 - 200 MHz
	60	75		dB	200 - 600 MHz
VSWR		1.25/1	1.35/1		
Impedance		50		OHMS	
Switching Speed			0.5	µSEC	50% TTL to 90% / 10% RF
Transition (Rise/Fall) Time		0.3		nSEC	10% / 90% or 90% / 10% RF
Switching (Video) Transients		0.6		V	
Intercept Points *2nd*		+65		dBm	
3rd		+40		dBm	
RF Power *Operate*		+13	+10	dBm	0.1 dB Comp. Below 40 MHz
			+13	dBm	0.1 dB Comp. Above 40 MHz
No Damage			+30	dBm	
Operating Temperature	-55	+25	+85	°C	TA