SP2T

FEATURES

- 100 - 1400 MHz
- 0.5 dB Insertion Loss
- 20 Watts CW
- TTL Driver
- SMA, BNC or TNC Connectors

MODEL NO. 100C1032

Medium Power PIN Diode SP2T

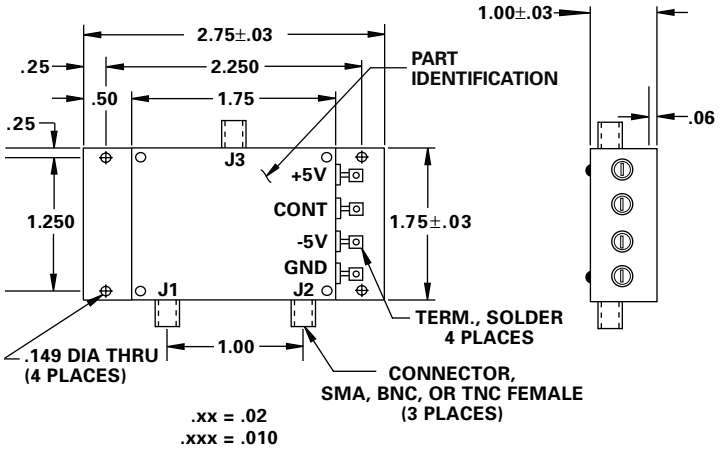

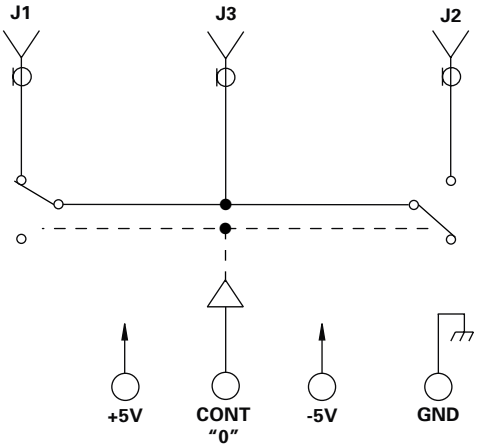

PART NO. EXAMPLE
100C1032 - SMA
SPECIFY CONNECTOR TYPE
BASIC PART NUMBER

TYPICAL PERFORMANCE at 25°C

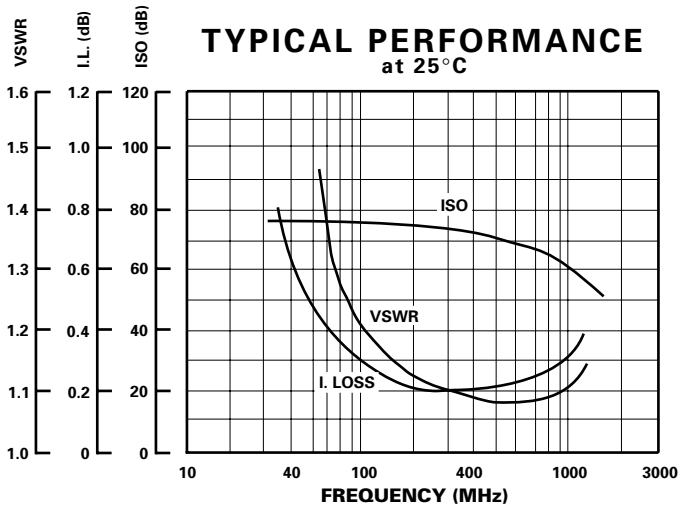

GUARANTEED PERFORMANCE

Parameter		Min	Typ	Max	Units	Conditions
Operating Frequency		100		1400	MHz	
DC Current					mA	See Table
Control Type			TTL			1 Line Logic "0" = J3 - J1 Logic "1" = J3 - J2
Control Current	*High*			80	µA	VIH = +2.7V
	Low			-3.2	mA	VIL = +0.4V
Insertion Loss			.38	0.5	dB	
Isolation		60	70		dB	100 - 500 MHz
		40	50		dB	500 - 1400 MHz
VSWR	*Thru*		1.14/1	1.3/1		
Impedance			50		OHMS	
Switching Speed				10	µSEC	50% TTL to 90% / 10% RF
RF Power	*Operate*			20	W	CW
Operating Temperature		-55	+25	+85	°C	TA

CURRENT TABLE
LOGIC "1"
+5V AT 30 mA
-5V AT 160 mA
Logic "0"
+5V AT 160 mA
-5V AT 0mA