1 BIT

FEATURES

- **200 - 600 MHz**
- **SPACE Application**
- **Hermetic Package**
- **Small Size**
- **Surface Mount**
- **Radiation Tolerant, 100 K Rad**

MODEL NO. CAT15065

GaAs 1 Section Attenuator

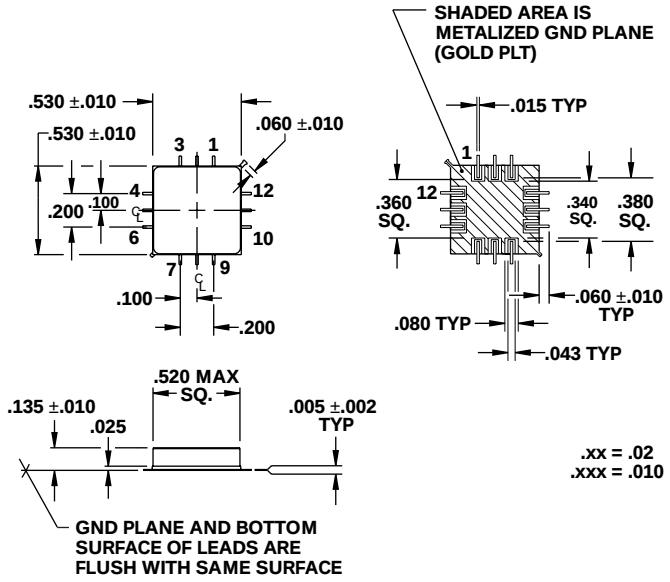

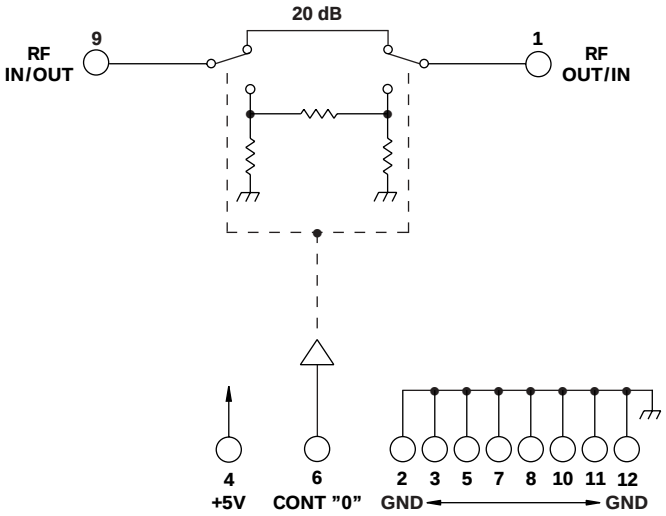

TYPICAL PERFORMANCE
at 25°C

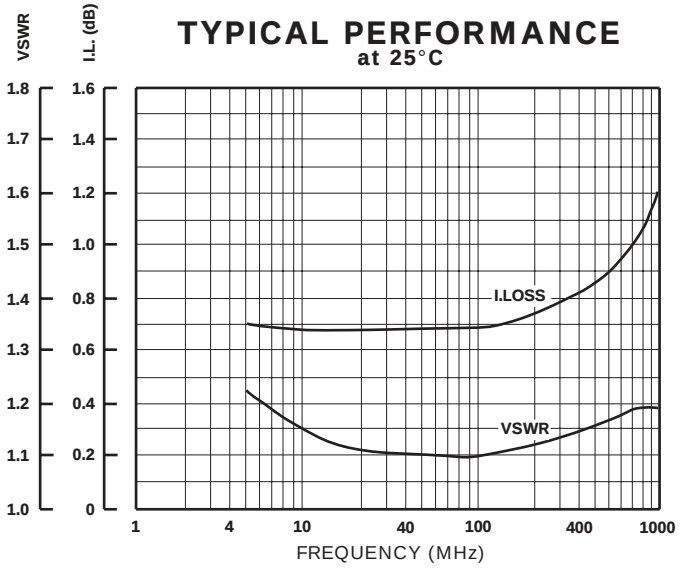

GUARANTEED PERFORMANCE

Parameter		Min	Typ	Max	Units	Conditions
Operating Frequency		200		600	MHz	
DC Current			0.2	1.0	mA	At +5 VDC Supply
Control Type			CMOS			1 Line Logic "0" = Thru Logic "1" = Attenuation
Control Current	*High*		0	±20	µA	3 - 5 Volts
	Low		0	±20	µA	0 - 0.5 Volts
Insertion Loss			1.0	1.5	dB	
Attenuation	*LSB*		20		dB	
	Range	0		20	dB	
	Accuracy				dB	± (0.15 dB +2% of Atten Setting in dB)
	Flatness			±0.2	dB	
VSWR			1.1/1	1.25/1		
Impedance			50		OHMS	
Switching Speed			20	50	nSec	50% Control Signal 90% / 10% RF
Transition (Rise/Fall) Time			10		nSec	10% / 90% or 90% / 10% RF
Switching (Video) Transients			45		mV	Peak Value
Intercept Points	*2nd*	+75	+80		dBm	
	3rd	+40	+48		dBm	
RF Power	*Operate*		+12	+10	dBm	0.1 dB Compression
	No Damage			+27	dBm	
Operating Temperature		0	+25	+65	°C	TA
Non-Operating Temperature		-34		+95	°C	TA