SP2T

FEATURES

- 5 - 1500 MHz
- 0.7 mA, +5VDC
- 90 dB Isolation
- High Intercept points
- Non-Reflective
- TTL Driver
- 14 Pin DIP
- See DS0742 For 14 Pin SMP

MODEL NO. DS0842

GaAs SP2T

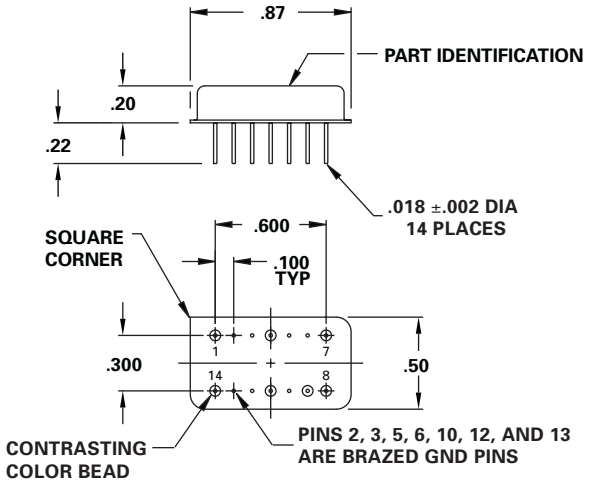

.xx = .02
.xxx = .010

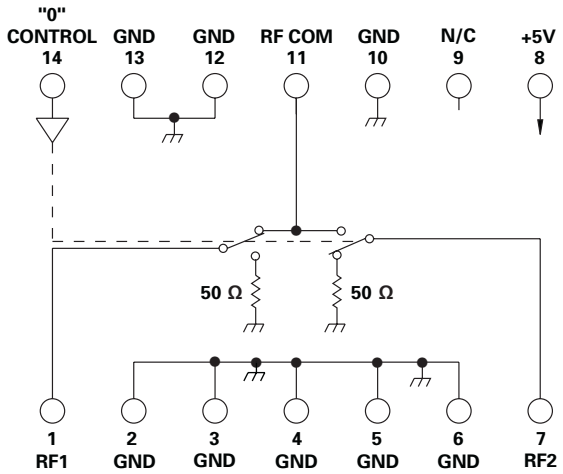

N/C = NO INTERNAL CONNECTION

TYPICAL PERFORMANCE

at 25°C

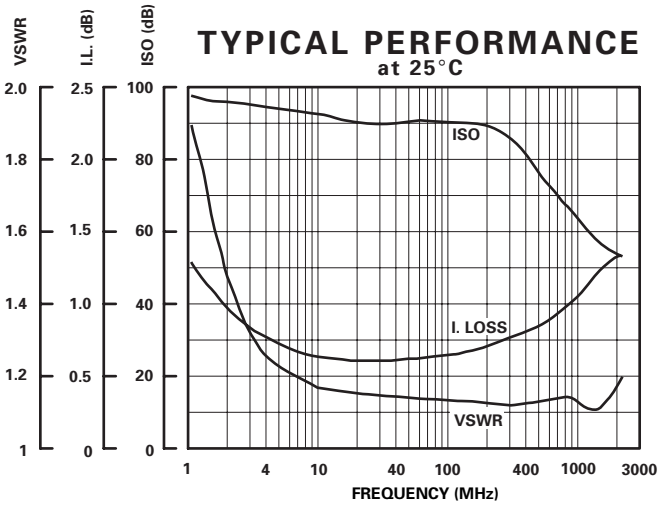

GUARANTEED PERFORMANCE

Parameter		Min	Typ	Max	Units	Conditions
Operating Frequency		5		1500	MHz	
DC Current			0.7	1.0	mA	At +5 VDC Supply
Control Type			TTL			1 Line Logic "0" = Pin 11 to Pin 1 Logic "1" = Pin 11 to Pin 7
Control Current	*High*		1.0	±10	μA	VIH = +3.0V
	Low		1.0	±10	μA	VIL = +0.5V
Insertion Loss			1.0	1.25	dB	5 - 300 MHz
			1.5	2.0	dB	300 - 1500 MHz
Isolation		60	75		dB	5 - 300 MHz
		50	58		dB	300 - 1500 MHz
VSWR	*Thru*		1.25/1	1.4/1		
	Termination			2/1		
Impedance			50		OHMS	
Switching Speed			50	70	nSEC	50% TTL to 90% / 10% RF
Transition (Rise/Fall) Time			40		nSEC	90% / 10% or 10% / 90% RF
Switching (Video) Transients			25		mV	Peak Value
Intercept Points	*2nd*		+69		dBm	500 MHz / 350 MHz
	3rd		+50		dBm	250 MHz / 350 MHz
RF Power	*Operate*		+14	+10	dBm	5 - 100 MHz 0.1 dB Comp.
			+20	+15	dBm	100 - 1500 MHz 0.1 dB Comp.
	No Damage			+30	dBm	
Operating Temperature		-55	+25	+125	°C	TA